DOCKET

No. 13-896

Title:	Commil USA, LLC, Petitioner v. Cisco Systems, Inc.
Docketed:	January 28, 2014
Lower Ct:	United States Court of Appeals for the Federal Circuit
Case Nos.:	(2012-1042)
Decision Date:	June 25, 2013
Rehearing Denied:	October 25, 2013

Questions Presented

—Date—	——Proceedings and Orders——
Jan 23 2014	Petition for a writ of certiorari filed. (Response due February 27, 2014)
Feb 3 2014	Order extending time to file response to petition to and including March 31, 2014.
Mar 31 2014	Brief of respondent Cisco Systems, Inc. in opposition filed.
May 6 2014	DISTRIBUTED for Conference of May 22, 2014.
May 27 2014	The Solicitor General is invited to file a brief in this case expressing the views of the United States. Justice Breyer took no part in the consideration or decision of this petition.
Oct 16 2014	Brief amicus curiae of United States filed. VIDED.
Oct 31 2014	Supplemental brief of respondent Cisco Systems, Inc. filed. VIDED.
Oct 31 2014	Reply of petitioner Commil USA, LLC filed. VIDED.
Nov 3 2014	DISTRIBUTED for Conference of November 25, 2014.
Dec 1 2014	DISTRIBUTED for Conference of December 5, 2014.
Dec 5 2014	Petition GRANTED limited to Question 1 presented by the petition. Justice Breyer took no part in the consideration or decision of this petition.
Jan 20 2015	Brief of petitioner Commil USA, LLC filed.
Jan 20 2015	Joint appendix filed. (Statement of costs filed.)
Jan 26 2015	Brief amicus curiae of Gilead Sciences, Inc. filed.
Jan 26 2015	Brief amicus curiae of Intellectual Property Owners Association filed.
Jan 27 2015	Brief amicus curiae of United States filed.
Jan 27 2015	Brief amicus curiae of AbbVie Inc. filed.
Jan 27 2015	Brief amicus curiae of American Intellectual Property Law Association in support of neither party filed.
Jan 27 2015	Brief amicus curiae of Pharmaceutical Research and Manufacturers of America filed.
Jan 27 2015	Brief amicus curiae of MUSC Foundation for Research Development filed.
Jan 27 2015	Brief amicus curiae of Biotechnology Industry Organization filed.
Feb 2 2015	SET FOR ARGUMENT ON Tuesday, March 31, 2015
Feb 3 2015	Record requested from U.S.C.A. Federal Circuit.
Feb 4 2015	Record received from U.S.C.A. Federal Circuit is electronic and located on PACER.

Feb 12 2015	CIRCULATED
Feb 19 2015	Brief of respondent Cisco Systems, Inc. filed. (Distributed)
Feb 20 2015	Motion of the Solicitor General for leave to participate in oral argument as amicus curiae and for divided argument filed.
Feb 24 2015	Brief amici curiae of Public Knowledge, et al. filed.
Feb 25 2015	Brief amici curiae of Sixteen Intellectual Property Law Professors filed. (Distributed).
Feb 26 2015	Brief amici curiae of EMC Corporation, et al. filed. (Distributed)
Feb 26 2015	Brief amicus curiae of Computer & Communications Industry Association filed. (Distributed)
Feb 26 2015	Brief amici curiae of Delorme, et al. filed. (Distributed)
Feb 26 2015	Brief amicus curiae of Generic Pharmaceutical Association filed. (Distributed)
Feb 26 2015	Brief amicus curiae of Electronic Frontier Foundation filed. (Distributed)
Feb 26 2015	Brief amicus curiae of Askeladden L.L.C. filed. (Distributed)
Feb 26 2015	Brief amicus curiae of Professor Saurabh Vishnubhakat filed. (Distributed)
Mar 20 2015	Motion of the Solicitor General for leave to participate in oral argument as amicus curiae and for divided argument GRANTED. Justice Breyer took no part in the consideration or decision of this motion.
Mar 20 2015	Reply of petitioner Commil USA, LLC filed. (Distributed)
Mar 31 2015	Argued. For petitioner: Mark S. Werbner, Dallas, Tex.; and Ginger D. Anders, Assistant to the Solicitor General, Department of Justice, Washington, D. C. (for United States, as amicus curiae.) For respondent: Seth P. Waxman, Washington, D. C.
May 26 2015	Judgment VACATED and case REMANDED. Kennedy, J., delivered the opinion of the Court, in which Ginsburg, Alito, Sotomayor, and Kagan, JJ., joined, and in which Thomas, J., joined as to Parts II-B and III. Scalia, J., filed a dissenting opinion, in which Roberts, C. J., joined. Breyer, J., took no part in the consideration or decision of the case.
Jun 29 2015	JUDGMENT ISSUED.

PETITION FOR WRIT OF CERTIORARI

13-896

Supreme Court, U.S.
FILED
JAN 23 2014
OFFICE OF THE CLERK

In The
Supreme Court of the United States

COMMIL USA, LLC,

Petitioner,

v.

CISCO SYSTEMS, INC.,

Respondent.

ON PETITION FOR WRIT OF CERTIORARI TO
THE UNITED STATES COURT OF APPEALS
FOR THE FEDERAL CIRCUIT

PETITION FOR WRIT OF CERTIORARI

Mark S. Werbner
Counsel of Record
Richard A. Sayles
Mark D. Strachan
Darren P. Nicholson
SAYLES | WERBNER
4400 Renaissance Tower
1201 Elm Street
Dallas, Texas 75270
(214) 939-8700
mwerbner@swtriallaw.com

Counsel for Petitioner

Dated: January 23, 2014

THE LEX GROUP DC ♦ 1825 K Street, N.W. ♦ Suite 103 ♦ Washington, D.C.
(202) 955-0001 ♦ (800) 856-4419 ♦ Fax: (202) 955-0022 ♦ www.thelexgroup.com

QUESTIONS PRESENTED

Commil holds a patent teaching a method to implement short-range wireless networks. At trial, the jury returned a verdict that Commil's patent was valid, that Cisco directly infringed but did not induce infringement, and awarded damages. Because Cisco's counsel invoked stereotypes about Commil's Jewish owner and inventors during trial, the district court found the verdict "inconsistent with substantial justice" and ordered a new trial on inducement and damages only. At the second trial, the jury returned a verdict that Cisco induced infringement and awarded damages. The Federal Circuit reversed and remanded for a third trial on two grounds. First, although Commil's patent is valid, the Federal Circuit held that Cisco's "good faith belief" that the patent was invalid is a defense to induced infringement. Second, although Cisco had actual knowledge of Commil's patent, the Federal Circuit held that this Court's opinion in *Global-Tech Appliances, Inc. v. SEB S.A.*, 131 S. Ct. 2060 (2011) rendered erroneous and prejudicial the jury instruction based on *DSU Medical Corp. v. JMS Co.*, 471 F.3d 1293 (Fed. Cir. 2006). The questions presented are:

1. Whether the Federal Circuit erred in holding that a defendant's belief that a patent is invalid is a defense to induced infringement under 35 U.S.C. § 271(b).

2. Whether the Federal Circuit erred in holding that *Global-Tech Appliances, Inc. v. SEB S.A.*, 131 S. Ct. 2060 (2011) required retrial on the

issue of intent under 35 U.S.C. § 271(b) where the jury (1) found the defendant had actual knowledge of the patent and (2) was instructed that "[i]nducing third-party infringement cannot occur unintentionally."

PARTIES TO THE PROCEEDING

The petitioner here, and plaintiff-appellee in the Federal Circuit, is Commil USA, LLC ("Commil"). The respondent here, and the defendant-appellant in the Federal Circuit, is Cisco Systems, Inc. ("Cisco").

CORPORATE DISCLOSURE STATEMENT

Pursuant to Rule 29.6 of the Rules of this Court, petitioner Commil USA, LLC states that it has no parent corporation and no publicly held company owns 10 percent or more its stock.

TABLE OF CONTENTS

Page

QUESTIONS PRESENTED i

PARTIES TO THE PROCEEDING iii

CORPORATE DISCLOSURE STATEMENT iv

TABLE OF CONTENTS v

TABLE OF AUTHORITIES ix

OPINIONS BELOW 1

JURISDICTION 1

STATUTORY PROVISIONS INVOLVED 2

STATEMENT OF THE CASE 3

A. The Patented Technology 4

B. Cisco's Knowledge of Commil's Patent 5

C. Proceedings at the District Court 7

D. Proceedings at the Federal Circuit 9

REASON FOR GRANTING THE PETITION 11

I. THE COURT SHOULD DETERMINE WHETHER A PARTY'S BELIEF THAT A PATENT IS INVALID IS A DEFENSE TO INDUCING INFRINGEMENT UNDER 35 U.S.C. § 271(b) 11

II. THE COURT SHOULD DETERMINE WHETHER *GLOBAL-TECH* OVERRULED *EN BANC* FEDERAL CIRCUIT LAW GOVERNING JURY INSTRUCTIONS ON INDUCEMENT INTENT WHERE THE DEFENDANT HAD ACTUAL KNOWLEDGE OF THE PATENT 20

A. The Federal Circuit Incorrectly Held That The Jury Was Given An Instruction That "Plainly Recites a Negligence Standard" 20

B. The Federal Circuit's Error Resulted From The Incorrect Premise That *Global-Tech* Overruled *DSU* 22

C. The *Commil* Opinion Compounds The Confusion Created By *Global-Tech* About How A Plaintiff Can Prove That The Intent Requirement Is Satisfied 27

CONCLUSION 31

APPENDIX

Opinion of
The United States Court of Appeals for
The Federal Circuit
entered June 25, 2013 ..... 1a

Memorandum Opinion and Order of
The United States District Court for
The Eastern District of Texas
entered December 29, 2010 ..... 40a

Order of
The United States District Court for
The Eastern District of Texas
entered April 1, 2011 ..... 45a

Amended Final Judgment of
The United States District Court for
The Eastern District of Texas
entered September 28, 2011 ..... 48a

Order of
The United States Court of Appeals for
The Federal Circuit
Re: Denying Rehearing *En Banc*
entered October 25, 2013 ..... 50a

Statutory Provisions Involved

35 U.S.C. § 271 ..... 64a

35 U.S.C. § 282 ..... 74a

U.S. Patent No. 6,430,395 B2 ..... 77a

Excerpts of Transcript of
Pretrial Hearing before
The Honorable Chad Everingham
on March 24, 2011 ..... 203a

Excerpts of Transcript of
Jury Trial before
The Honorable Chad Everingham
on April 6, 2011 ..... 218a

Excerpts of Transcript of
Jury Trial before
The Honorable Chad Everingham
on April 6, 2011 ..... 229a

Excerpts of Transcript of
Jury Trial before
The Honorable Chad Everingham
on April 8, 2011 ..... 236a

TABLE OF AUTHORITIES

Page

CASES

Akamai Techs., Inc. v. Limelight Networks, Inc.,
692 F.3d 1301 (Fed. Cir. 2012) 26

Artesyn Techs., Inc. v. Synqor, Inc.,
No. 13-375 (Sept. 23, 2013) 27

Arthrex, Inc. v. Smith & Nephew, Inc.,
No. 13-290 (Aug. 30, 2013) 27

Boyde v. California,
494 U.S. 370 (1990) 22

Broadcom Corp. v. Qualcomm, Inc.,
543 F.3d 683 (Fed. Cir. 2008) 18

Commil USA, LLC v. Cisco Sys.,
720 F.3d 1361 (Fed. Cir. 2013) 13, 26, 27

CSIRO v. Buffalo Technology (USA), Inc.,
542 F.3d 1363 (Fed. Cir. 2008) 16

Cupp v. Naughten,
414 U.S. 141 (1973) 22

Digital Control, Inc. v. Charles Mach. Works,
437 F.3d 1309 (Fed. Cir. 2006) 23

DSU Medical Corp. v. JMS Co.,
471 F.3d 1293 (Fed. Cir. 2006) ..... *passim*

Everson v. Leis,
412 Fed. Appx. 771 (6th Cir. 2011).....23

Farmer v. Brennan,
511 U.S. 825 (1994) 23, 30

Global-Tech Appliances, Inc. v. SEB S.A.,
131 S. Ct. 2060 (2011) .....*passim*

Hewlett-Packard Co. v. Bausch & Lomb Inc.,
909 F.2d 1464 (Fed. Cir. 1990).....15

In re Bill of Lading Transmission & Processing Sys. Patent Litig.,
681 F.3d 1323 (Fed. Cir. 2012).....26

In re Seagate Tech.,
497 F.3d 1360 (Fed. Cir. 2007).....17, 18

Jerman v. Carlisle, McNellie, Rini, Kramer & Ulrich LPA,
130 S. Ct. 1605 (2010) 16

LadaTech, LLC v. Illumina, Inc.,
No. 09-627-SLR, 2012 WL 1188266
(D. Del. Feb. 14, 2012).....18

Mars, Inc. v. Coin Acceptors, Inc.,
527 F.3d 1359 (Fed. Cir. 2008).....15

Medtronic, Inc. v. Cardiac Pacemakers, Inc.,
721 F.2d 1563 (Fed. Cir. 1983).....13, 14

Merial Ltd. v. Cipla Ltd.,
681 F.3d 1283 (Fed. Cir. 2012).....26

Metro-Goldwyn-Mayer Studios Inc. v. Grokster,
545 U.S. 913 (2005) 23, 24

Microsoft Corp. v. i4i Ltd. P'ship,
131 S. Ct. 2238 (2011) 11

Pandrol USA, LP v. Airboss Railway Prods., Inc.,
320 F.3d 1354 (Fed. Cir. 2003)..... 13

Prima Tek II, L.L.C. v. Polypap, S.A.R.L.,
412 F.3d 1284 (Fed. Cir. 2005)..... 14

Richdel, Inc. v. Sunspool Corp.,
714 F.2d 1573 (Fed. Cir. 1983)..... 14

SEB S.A. v. Montgomery Ward & Co.,
594 F.3d 1360 (Fed. Cir. 2010)..... 25, 26

Sykes v. United States,
131 S. Ct. 2267 (2011) 22

TecSec, Inc. v. Int'l Bus. Mach. Corp.,
— F.3d —, No. 2012-1415,
2013 WL 5452049 (Fed. Cir. 2013) 13

STATUTES

28 U.S.C. § 1254(1)..... 1

28 U.S.C. § 1295(a)(1) 9

28 U.S.C. § 1331 7

28 U.S.C. § 1338(a)..... 7

35 U.S.C. § 271(a) 7

35 U.S.C. § 271(b) ..... *passim*

35 U.S.C. § 282(a) 2, 11

35 U.S.C. § 282(b) 11

LEGISLATIVE MATERIAL

H.R. Rep. No. 82-1923 12

OTHER MATERIALS

LaFave & Scott § 3.7 ..... 23, 30

Restatement (Second) of Torts §164, & cmt. e (1963-1964) 16

W. Keeton, D. Dobbs, R. Keeton & D. Owen, Prosser and Keeton on Law of Torts 110 (5th ed. 1984) 16

Petitioner Commil USA, LLC, respectfully petitions for a writ of certiorari to review the judgment of the United States Court of Appeals for the Federal Circuit in this case.

OPINIONS BELOW

The Federal Circuit panel opinions, including a majority opinion and two opinions concurring-in-part and dissenting-in-part, are reported at 720 F.3d 1361 (App. 1a-39a)[1]. The Federal Circuit order denying Commil's petition for rehearing *en banc*, including opinions dissenting from the denial joined by five of the eleven participating Federal Circuit judges, is not yet reported (App. 50a-63a). The Memorandum Opinion and Order of the district court granting petitioner's motion for new trial is not reported. (App. 40a-44a). The Order of the district court granting petitioner's motion *in limine* is not reported. (App. 45a-47a). The Amended Final Judgment of the district court that is the subject of this appeal is not reported. (App. 48a-49a).

JURISDICTION

The Federal Circuit entered its judgment on June 25, 2013, and denied Commil's petition for rehearing *en banc* by an order entered on October 25, 2013. This Court has jurisdiction under 28 U.S.C. § 1254(1).

---

[1] References to "App. __a" are to the appendix bound together with this petition; references to "A__" are to the appendix filed in the Federal Circuit.

STATUTORY PROVISIONS INVOLVED

The relevant portion of 35 U.S.C. § 271(b) provides:

> (b) Whoever actively induces infringement of a patent shall be liable as an infringer.

The relevant portion of 35 U.S.C. § 282(a) provides:

> (a) In General. — A patent shall be presumed valid. Each claim of a patent (whether in independent, dependent, or multiple dependent form) shall be presumed valid independently of the validity of other claims; dependent or multiple dependent claims shall be presumed valid even though dependent upon an invalid claim. The burden of establishing invalidity of a patent or any claim thereof shall rest on the party asserting such invalidity.

STATEMENT OF THE CASE

This petition raises two important issues relating to inducement of patent infringement that, as decided by a divided Federal Circuit, dramatically weaken the Patent Act's provision of liability for inducing infringement, 35 U.S.C. § 271(b). Through two trials and the successful resolution of an *ex parte* reexamination proceeding at the United States Patent & Trademark Office ("USPTO") requested by Cisco, Commil has proved that its patent is valid, that Cisco had actual knowledge of Commil's patent and its relevance to Cisco's products, and that Cisco caused its customers to directly infringe Commil's patent. Nevertheless, the Federal Circuit has ordered a third trial to permit Cisco to present a newly created defense to inducement—that Cisco had a "good faith belief" that Commil's patent was invalid. Cisco has obtained a new trial on this point even though the validity of Commil's patent was confirmed by both a jury (whose verdict of validity was then affirmed by Federal Circuit) and, separately, by the USPTO in a reexamination proceeding.

The Federal Circuit also found reversible error in the jury instruction on inducement intent, which required the jury to find that Cisco had knowledge of Commil's patent, "actually intended to cause the acts that constitute direct infringement," "actively and knowingly aided and abetted [its customers] direct infringement," and further instructed that inducement "cannot occur unintentionally." Misapplying this Court's opinion in *Global-Tech Appliances, Inc. v. SEB S.A.*, 131 S.

Ct. 2060 (2011), the Federal Circuit held that these instructions "plainly recite[d] a negligence standard" because they further required a finding that Cisco "knew or should have known that its actions would induce actual infringement." In context, the jury instruction reflected the correct level of culpability required for inducement. The Federal Circuit's interpretation of *Global-Tech* will generate substantial confusion because it raises doubt about when, if ever, a patentee can prove inducement without a "smoking gun" document in which a defendant expressly states its knowledge of the infringement. Moreover, the seemingly stringent standard adopted by the Federal Circuit in the present case cannot be reconciled with the outcome of *Global-Tech*, where this Court affirmed a verdict of inducement where the defendant did not (as here) even have actual knowledge of the patent.

Commil respectfully requests that this Court grant certiorari to correct the Federal Circuit's errors and provide clarity to the intent requirement for inducement.

A. The Patented Technology

Commil is the owner of U.S. Patent No. 6,430,395 ("the '395 Patent") (App. 77a-202a), which claims an improved way to implement a short-range wireless network such as a WiFi network. The invention is directed to wireless networks in areas that are too large to be covered by a single access point—for example, universities and large corporate buildings. The problem solved by the invention is how to manage "hand-offs" between multiple access

points (also referred to as base stations) that together provide wireless coverage over a large area. With a novel way to manage handoffs, the invention teaches a way to implement a wireless network that minimizes interference with the user's activities as the user moves throughout the network coverage area.

In wireless networks pre-dating Commil's invention, each base station independently handled the entire wireless communication protocol. A mobile device's transition from one base station to another in such a system resulted in disruptions to the communications and could negatively affect the user's experience. The inventors of the '395 patent devised a new way to implement short-range wireless networks to provide coordination between base stations and improve the speed and reliability of handoffs. Rather than using the old base stations that handle the entire communication protocol, the '395 invention provides a novel architecture that includes a new device called a "switch," which is connected to and supports multiple base stations. Based on this architecture, the communication protocol is divided into two parts, with certain functionality (including functionality that is time-sensitive) performed at the base station and other functionality (including functionality that is not time-sensitive) performed at the switch, as shown in Fig. 2 of the patent. App. 80a.

B. Cisco's Knowledge of Commil's Patent

Commil's CEO spoke with a Cisco mergers and acquisitions manager several times in late 2004

or early 2005. App. 221a-223a. During these discussions, Commil's CEO told Cisco about Commil's technology and patents and explained that they "line[d] the core" of the products presently accused of infringement, which Cisco was then acquiring from a company called Airespace. App. 224a-228a. Airespace, which was founded more than a year after the priority date of the '395 Patent, described the infringing access points and switches (collectively, "the Accused Products") with language that is strikingly similar to Commil's patent:

> Split-MAC WLAN systems ... split[] the processing of the 802.11 data and management protocols, as well as the AP [access point, a/k/a base station] functionality, between the AP and the WLAN switch or controller .... In the split-MAC approach, the AP handles the portions of the protocol that have real-time requirements .... All other functionality is handled in the WLAN switch/appliance, where time-sensitivity is not a concern ....

A15113. At trial, one of the founders of Airespace (who joined Cisco after the acquisition) admitted that Cisco knew about Commil's asserted patent. App. 233a-234a. Shortly after acquiring Airespace and with knowledge of both Commil's patent and the assertion by Commil's CEO that the patent "line[d] the core" of the Accused Products, Cisco implemented a "migration plan" to move all customers from the older and non-infringing access

points to the Accused Products "as quickly as possible." A15239.

C. Proceedings at the District Court

Commil filed the present lawsuit against Cisco in 2007. The district court had jurisdiction under 28 U.S.C. §§ 1331 and 1338(a). Because the claims of the '395 Patent recite a method that will be performed when the Accused Products are used, Commil asserted that Cisco directly infringed the asserted claims under 35 U.S.C. § 271(a) when it used the Accused Products itself and induced its customers' infringement under 35 U.S.C. § 271(b) by selling the Accused Products and encouraging their use (which necessarily results in direct infringement of the claimed method).

A first trial was held in May 2010, and the jury returned a verdict that Commil's patent was not invalid, that Cisco directly infringed, that Cisco was not liable for inducement, and that Commil's damages were $3,726,207 (the exact amount presented by Cisco's damages expert). App. 4a-5a. Throughout this trial, however, Cisco's counsel used religious references and played on stereotypes about Commil's owner and inventors, who are Jewish and reside in Israel. App. 13a-17a. In response to Commil's motion for a new trial, the district court found that Cisco's conduct "impliedly align[ed] Cisco's counsel's religious preference with that of the jurors and employ[ed] an 'us v. them' mentality—i.e., 'we are Christian and they are Jewish.'" App. 43a. The district court concluded that the verdict was

"inconsistent with substantial justice" and ordered a new trial on inducement and damages. App. 44a.

Although the validity of the '395 Patent had been resolved in Commil's favor in the first trial and was no longer at issue, Cisco sought to introduce evidence challenging validity in the second trial under the theory that it allegedly showed Cisco's belief in the invalidity of the '395 Patent. Cisco argued that this alleged belief prevented it from having the intent required for inducing infringement. The district court granted Commil's motion *in limine* to exclude evidence challenging validity. App. 46a, 206a.

At the close of the second trial, the jury was given instructions on inducement intent that were based on the instructions approved by the *en banc* Federal Circuit in *DSU Medical Corp. v. JMS Co.*, 471 F.3d 1293 (Fed. Cir. 2006). The instructions included the following:

> (1) ". . . Commil must prove by a preponderance of the evidence that Cisco actively and knowingly aided and abetted [its customers] direct infringement." App. 238a.
>
> (2) ". . . Commil must show that Cisco actually intended to cause the acts that constitute direct infringement and that Cisco knew or should have known that its actions would induce actual infringement." App. 238a-239a.

> (3) "Inducing third-party infringement cannot occur unintentionally." App. 239a.
>
> (4) "Cisco ... cannot be liable for inducing infringement if it was not aware of the existence of the patent." App. 239a.

These instructions were given seven weeks before this Court issued its *Global-Tech* opinion. The jury returned a verdict that Cisco was liable for inducing infringement and awarded damages of $63,791,153. App. 48a.

D. Proceedings at the Federal Circuit

On appeal to the Federal Circuit (which had jurisdiction under 28 U.S.C. § 1295(a)(1)), Cisco challenged two aspects of the proceedings relating to inducement (among other issues not relevant to this petition). First, Cisco argued that the district court improperly prevented Cisco from presenting evidence that allegedly demonstrated the invalidity of the '395 Patent in order to argue, as a defense to inducement, that it had a good faith belief that the asserted patent was invalid. Second, Cisco argued that the jury instructions were erroneous because they make use of certain "knew or should have known" language that, according to Cisco, was declared improper by this Court's opinion in *Global-Tech Appliances, Inc. v. SEB S.A.*, 131 S. Ct. 2060 (2011).

The panel vacated the jury's infringement and damages determinations, affirmed the validity determinations, and remanded for a new trial on inducement and damages. The basis for vacating the infringement determination was two-fold. First, the panel concluded that the jury instructions on inducement were erroneous because they were inconsistent with *Global-Tech*. App. 7a-8a. The panel further explained that to the extent the instructions would have been proper under pre-*Global-Tech* Federal Circuit law (such as *DSU*), such law was no longer good law. *Id.*

Second, and over a dissent by Judge Newman, the panel concluded that the district court erred by excluding Cisco's evidence relating to the validity of Commil's patent in the second trial. The panel majority acknowledged that its holding that "a good-faith belief of invalidity may negate the requisite intent for induced infringement" was new substantive law. App. 10a. The majority explained that it "s[aw] no principled distinction between a good-faith belief of invalidity and a good faith belief of non-infringement for the purpose of whether a defendant possessed the specific intent to induce infringement of a patent." App. 11a. This was so, according to the majority, because "[i]t is axiomatic that one cannot infringe an invalid patent." *Id.*

Commil filed a petition for rehearing *en banc*, which was denied over the dissent of five of the eleven participating judges. App. 50a-63a. Two dissenting opinions accompanied the denial—the first authored by Judge Reyna (joined by Chief Judge Rader, Judge Newman, Judge Lourie, and

Judge Wallach), and the second written by Judge Newman (joined by Chief Judge Rader, Judge Newman, and Judge Wallach). These dissenting opinions explained that neither the statute, nor Federal Circuit precedent, nor *Global-Tech* provided a foundation for the majority's new means of absolving inducers of liability for their infringement of valid patents. App. 54a, 61a-62a.

REASON FOR GRANTING THE PETITION

I. THE COURT SHOULD DETERMINE WHETHER A PARTY'S BELIEF THAT A PATENT IS INVALID IS A DEFENSE TO INDUCING INFRINGEMENT UNDER 35 U.S.C. § 271(b)

Issued patents are entitled to a statutory presumption of validity and the defense of invalidity must be proved by clear and convincing evidence. *See* 35 U.S.C. § 282(a)-(b); *Microsoft Corp. v. i4i Ltd. P'ship*, 131 S. Ct. 2238 (2011). The Federal Circuit's new defense to inducement, however, "fundamentally changes the operating landscape" and "strikes at the very heart of the presumption of validity by eroding patent rights that have been duly granted by the PTO based solely on an erroneous—albeit good faith—belief that the PTO erred in granting the patent." App. 58a-60a.

Where a defendant has a mistaken belief of invalidity, the patentee will now be deprived of any remedy for infringement under § 271(b) even if, for example, (1) the patent is valid; (2) the defendant knew about the patent; (3) the defendant

intentionally took actions that caused a third party to infringe the patent; and (4) the defendant intended to cause that infringement. Indeed, inequitable fact patterns such as this are the only occasion under which the Federal Circuit's new defense will come into play, as the absence of any one of the preceding four facts would mean no liability for the defendant under previously existing law. *See* App. 54a, 56a, 61a-62a.

Neither the Patent Act, nor this Court's precedent, nor Federal Circuit precedent justifies the panel majority's new invalidity-based defense to infringement. Title 35, Section 271(b) provides that "[w]hoever actively induces infringement of a patent shall be liable as an infringer" (emphasis added). As noted in Judge Reyna's dissent, "[t]he legislative history explains that the language of § 271(b) 'recites in broad terms that one who aids and abets an infringement is likewise an infringer.'" App. 55a. (quoting H.R. Rep. No. 82-1923, at 9) (emphasis added). This Court has held that "[t]he addition of the adverb 'actively' suggests that the inducement must involve the taking of affirmative steps to bring about the desired result." *Global-Tech*, 131 S. Ct. at 2065. The statute and legislative history make clear that the relevant result is infringement. This Court's case law is equally clear. *Id.* at 2068 ("Accordingly, we now hold that induced infringement under § 271(b) requires knowledge that the induced acts constitute patent infringement." (emphasis added)); *see also* App. 55a-56a.

It is well-established that "[a]n act of infringement occurs when all the elements of a

claimed product or method are met by the accused device or process." App. 55a. (quoting *TecSec, Inc. v. Int'l Bus. Mach. Corp.*, — F.3d —, No. 2012-1415, 2013 WL 5452049, at *13 (Fed. Cir. 2013) (emphasis added)). As recognized by Federal Circuit precedent, the determination of infringement is distinct from validity:

> [T]his court has long recognized that patent infringement and invalidity are separate and distinct issues. "Though an invalid claim cannot give rise to liability for infringement, whether it is infringed is an entirely separate question capable of determination without regard to its validity."

Pandrol USA, LP v. Airboss Railway Prods., Inc., 320 F.3d 1354, 1365 (Fed. Cir. 2003) (quoting *Medtronic, Inc. v. Cardiac Pacemakers, Inc.*, 721 F.2d 1563, 1383 (Fed. Cir. 1983)).

The crux of the Federal Circuit panel majority's reasoning in support of its new defense to a charge of inducing infringement is that "[i]t is axiomatic that one cannot infringe an invalid patent." App. 11a. But, as noted by the dissenting opinions, this proposition can hardly be "axiomatic" because it is directly contrary to *Pandrol* and *Medtronic*. App. 56a-57a, 61a-62a. The only cases relied upon by the panel majority may appear relevant at first blush, but upon closer review do not support its conclusion. App. 23a. In both opinions cited by the *Commil* majority for this "axiom," the panels decided that they did not need to address the

infringement issues raised on appeal because their invalidity determinations resolved all liability issues. *Id.*; *see also Prima Tek II, L.L.C. v. Polypap, S.A.R.L.*, 412 F.3d 1284, 1291 (Fed. Cir. 2005); *Richdel, Inc. v. Sunspool Corp.*, 714 F.2d 1573, 1580 (Fed. Cir. 1983).

As explained in Judge Reyna's dissenting opinion (App. 57a-58a) and by the Federal Circuit 30 years ago in *Medtronic*, a determination of invalidity may dispose of liability, but infringement of a claim is "an entirely separate question capable of determination without regard to its validity" and the "better practice" is to address each issue separately. *Medtronic*, 721 F.2d at 1583 (emphasis added). The panel majority's pronouncement that "it can hardly be said that the alleged inducer intended to induce infringement" if it erroneously believes the patent is invalid cannot be reconciled with *Medtronic*. App. 12a. Correcting the confusion that will be generated by conflicting Federal Circuit panel opinions is itself a reason for this Court to grant certiorari. *See* App. 62a. (noting that "[i]nvestors, competitors, and trial courts cannot be confident as to the law that will be applied by the Federal Circuit").

The Federal Circuit panel majority also reasoned that it "s[aw] no principled distinction between a good-faith belief of invalidity and a good-faith belief of non-infringement for the purpose of whether a defendant possessed the specific intent to induce infringement of a patent." App. 11a. In addition to the statutory presumption of validity, the statutory language defining inducement and corresponding legislative history, this Court's

precedent, and the Federal Circuit precedent discussed above, there are additional reasons that weigh against the panel majority's new defense to inducement.

First, as described in Judge Newman's dissent to the panel opinion, the panel's new defense is at odds with common principles of tort liability. "Patent infringement is a tort." *Mars, Inc. v. Coin Acceptors, Inc.*, 527 F.3d 1359, 1365 (Fed. Cir. 2008). As Judge Newman adeptly explained in her dissent to the panel opinion:

> The majority's view that a belief in invalidity can negate infringement is contrary to the principles of tort liability, codified in the inducement statute. Liability for induced infringement is akin to "liability . . . under a theory of joint tortfeasance, wherein one who intentionally caused, or aided and abetted, the commission of a tort by another was jointly and severally liable with the primary tortfeasor." *Hewlett-Packard Co. v. Bausch & Lomb Inc.*, 909 F.2d 1464, 1469 (Fed. Cir. 1990)[.]
>
> ***
>
> A mistake of law, even if made in good faith, does not absolve a tortfeasor. "Our law is . . . no stranger to the possibility that an act may be 'intentional' for purposes of civil liability, even if the actor lacked actual knowledge that her conduct violated the

> slaw." *Jerman v. Carlisle, McNellie, Rini, Kramer & Ulrich LPA*, 130 S. Ct. 1605, 1612 (2010). "If one intentionally interferes with the interests of others, he is often subject to liability notwithstanding the invasion was made under an erroneous belief as to some legal matter that would have justified the conduct." *Id.* (quoting W. Keeton, D. Dobbs, R. Keeton & D. Owen, Prosser and Keeton on Law of Torts 110 (5th ed. 1984)). A trespass "can be committed despite the actor's mistaken belief that she has a legal right to enter the property." *Id.* (citing Restatement (Second) of Torts § 164, & cmt. e (1963-1964)). "[P]atent validity is a question of law," *CSIRO v. Buffalo Technology (USA), Inc.*, 542 F.3d 1363, 1375 (Fed. Cir. 2008), and an "erroneous belief" of the "legal matter" of validity does not excuse the violation. *Jerman*, 130 S. Ct. at 1612.

App. 24a-25a.

Second, as Judge Reyna explained in his dissent to the denial of Commil's petition for rehearing *en banc*, "[c]onflating infringement and invalidity also unnecessarily complicates the induced infringement inquiry." App. 58a. Judge Reyna continued:

> [I]nfringement and non-infringement are opposite sides of the same coin

> whereas infringement and invalidity are altogether entirely different coins. The intent element of § 271(b) is met when the accused infringer acts with actual knowledge of the patent claim and was "actively inducing" conduct that it knew to be within the scope of an asserted claim. Whether the accused infringer held a good faith belief that it was inducing conduct that fell outside the scope of the claims is directly relevant to this intent inquiry. But whether the accused infringer held a good faith belief in invalidity—e.g., an erroneous belief regarding obviousness—is wholly unrelated to the accused infringer's conduct vis-à-vis the limitations of a presumptively valid patent claim.

App. 58a-59a. (citation omitted).

Third, the relative intent requirements for willfulness and inducement counsel against this new "good faith belief in invalidity" defense to inducement. For willfulness—unlike inducement—the defendant's subjective belief about validity is a factor. *Compare In re Seagate Tech.*, 497 F.3d 1360, 1371 (Fed. Cir. 2007) ("[T]o establish willful infringement, a patentee must show . . . that the infringer acted despite an objectively high likelihood that its actions constituted infringement of a valid patent." (en banc; emphasis added)), *with DSU*, 471 F.3d at 1306 ("[I]nducement requires that an alleged infringer knowingly induced infringement and possessed specific intent to encourage another's

infringement.") (en banc; emphasis added)); *see also* App. 23a. ("A good-faith belief of patent invalidity may be raised as a defense to willfulness of the infringement, but it is not a defense to the fact of infringement.").

Because willfulness permits enhanced damages, a higher level of culpability should be required. *See In re Seagate*, 497 F.3d at 1368 (en banc); *Broadcom Corp. v. Qualcomm, Inc.*, 543 F.3d 683, 699 (Fed. Cir. 2008) ("[A] lack of culpability for willful infringement does not compel a finding of non-infringement under an inducement theory."). Under *Broadcom*, for example, a plaintiff can rely on the defendant's failure to obtain an opinion of counsel to prove inducement even though such evidence cannot be used to prove willfulness. 543 F.3d at 699-700. The same principle should apply here—a defendant has more defenses to a willfulness allegation (*e.g.*, a good faith belief in invalidity) than to an inducement charge. *See LadaTech, LLC v. Illumina, Inc.*, No. 09-627-SLR, 2012 WL 1188266, at *2 (D. Del. Feb. 14, 2012) ("While defendants' beliefs regarding patent validity may be a relevant defense to willfulness, such beliefs are not a relevant defense to inducement of infringement.").

Finally, the panel majority's opinion creates more questions than it answers, which will inevitably spawn extensive (and expensive) litigation about the bounds of this new defense. *See* App. 58a-60a. For example, the panel majority opinion's response to Judge Newman's panel dissent is a puzzling attempt to temper or disavow what one would have otherwise thought was the holding of the

case. The majority first writes: "We now hold that evidence of an accused inducer's good-faith belief of invalidity may negate the requisite intent for induced infringement." App. 12a. In a footnote accompanying this sentence, the majority then says that it "certainly [do]es not hold 'that if the inducer of infringement believes in good faith that the patent is invalid, there can be no liability for induced infringement.'" App. 13a. If "an accused inducer's good-faith belief of invalidity may negate the requisite intent for inducement," it is unclear how a patentee could ever succeed in establishing liability for induced infringement where "the inducer of infringement believes in good faith that the patent is invalid." *Id.*

The new defense created by the Federal Circuit panel majority is at odds with the Patent Act and its legislative history, the statutory presumption of validity, the precedent of this Court or the Federal Circuit, principles of tort liability, and the relationship between willful and non-willful infringement. It is an unwarranted and unnecessary escape hatch that will serve only to increase the expense of litigation and release defendants who are inducing infringement of valid patents from all liability. Commil respectfully requests that this Court grant certiorari to restore the import of the statutory presumption of validity and return force to 35 U.S.C. § 271(b).

II. THE COURT SHOULD DETERMINE WHETHER *GLOBAL-TECH* OVERRULED *EN BANC* FEDERAL CIRCUIT LAW GOVERNING JURY INSTRUCTIONS ON INDUCEMENT INTENT WHERE THE DEFENDANT HAD ACTUAL KNOWLEDGE OF THE PATENT

A. The Federal Circuit Incorrectly Held That The Jury Was Given An Instruction That "Plainly Recites a Negligence Standard"

The jury was given the following instructions pertaining to inducement:

> If you find that a third party has directly infringed Claim 1, 4, or 6 of the '395 patent, then Commil must prove by a preponderance of the evidence that Cisco actively and knowingly aided and abetted that direct infringement.
>
> Furthermore, Commil must show that Cisco actually intended to cause the acts that constitute direct infringement and that Cisco knew or should have known that its actions would induce actual infringement.
>
> Inducing third-party infringement cannot occur unintentionally. This is different from direct infringement, which can occur unintentionally. Cisco also cannot be liable for inducing

> infringement if it was not aware of the existence of the patent.
>
> If you find that a third party has directly infringed Claim 1, 4, or 6 of the '395 patent and that Cisco knew or should have known that its actions would induce direct infringement, you may find that Cisco induced another to infringe Commil's patent if it provided instructions and directions to perform the infringing act through labels, advertising, or other sales methods.
>
> You may also find that Cisco induced infringement by supplying the components that are used in an infringing manner with the knowledge and intent that its customer would directly infringe by using the components to perform every step of the claimed method

App. 238a-239a. (emphasis added).

Focusing solely on the "knew or should have known" language, the Federal Circuit held that "the present jury instruction plainly recites a negligence standard, which taken literally, would allow the jury to find the defendant liable based on mere negligence where knowledge is required." App. 8a. But the jury could not have found inducement based on mere negligence, because the instruction required the jury to find that Cisco knew about the patent, that Cisco "actually intended to cause the acts that

constitute direct infringement," and that "actively and knowingly aided and abetted [its customers] direct infringement." Moreover, the instruction expressly precluded a finding of inducement if the jury found Cisco had not intentionally caused its customers infringement. *Cf. Sykes v. United States*, 131 S. Ct. 2267, 2285 (2011) (Scalia, J., dissenting) (describing "strict liability, negligence, and recklessness crimes" as "unintentional crimes").[2]

B. The Federal Circuit's Error Resulted From The Incorrect Premise That *Global-Tech* Overruled *DSU*

The Federal Circuit's error stemmed from a misapplication of this Court's opinion in *Global-Tech*. Prior to *Global-Tech*, the *en banc* Federal Circuit in *DSU* had recognized that "knew or should have known" language could properly be used in a jury instruction on inducement intent so long as the jury is also required to find culpable conduct, knowledge of the patent (which was not disputed in

---

[2] Even if the mere use of the "knew or should have known" language was error, it was harmless. It is a "well-established proposition that a single instruction to a jury may not be judged in artificial isolation, but must be viewed in the context of the overall charge." *Cupp v. Naughten*, 414 U.S. 141, 146-47 (1973). Lay jurors would not confuse these instructions with a negligence standard. *See Boyde v. California*, 494 U.S. 370, 380-81 (1990) ("Jurors do not sit in solitary isolation booths parsing instructions for subtle shades of meaning in the same way that lawyers might.").

DSU), and intent to cause the infringing acts.[3] *See DSU Medical Corp. v. JMS Co.*, 471 F.3d 1293, 1305-06 (Fed. Cir. 2006). Although *DSU* and *Global-Tech* rely on the same precedent and set forth the same substantive standard, confusion abounds about if (and if so, how) *Global-Tech* altered *DSU*. In the present case, the Federal Circuit panel acknowledged that the challenged language in the present instructions was approved in *DSU*, but went on to hold it was erroneous and required a new trial in light of *Global-Tech*. App. 7a-8a. The instructions given were consistent with both *DSU* and *Global-Tech*, and this Court should grant certiorari to correct misconceptions about the relationship between *DSU* and *Global-Tech*.

In *DSU*, the *en banc* Federal Circuit addressed the intent requirement for inducement. Relying heavily on this Court's opinion in *Metro-Goldwyn-Mayer Studios Inc. v. Grokster*, 545 U.S. 913 (2005), the Federal Circuit held that "inducement requires that the alleged infringer knowingly induced infringement and possessed

---

[3] In the context of a proper instruction, the "knew or should have known" language serves the important purpose of recognizing that direct evidence of wrongful intent will rarely, if ever, be available. *Cf. Digital Control, Inc. v. Charles Mach. Works*, 437 F.3d 1309, 1317 (Fed. Cir. 2006) ("Direct evidence of intent is rare, such that a court must often infer intent from the surrounding circumstances."); *see also Farmer v. Brennan*, 511 U.S. 825, 1981 (1994) ("[I]f the risk is obvious, so that a reasonable man would realize it, we might well infer that [the defendant] did in fact realize it . " (quoting LaFave & Scott § 3.7, p. 335)); *Everson v. Leis*, 412 Fed. Appx. 771, 782 (6th Cir. 2011) ("[A]n inference can be drawn from the fact that he should have known, and that inference is circumstantial evidence of Wittich's actual knowledge.").

specific intent to encourage another's infringement." 471 F.3d at 1306 (quotation marks omitted). In 2011, this Court issued its opinion in *Global-Tech*, which also addressed the intent requirement for inducement. Much like *DSU*, this Court's opinion relied on *Grokster* and held that "induced infringement under § 271(b) requires knowledge that the induced acts constitute patent infringement." *Global-Tech*, 131 S. Ct. at 1067-68.

Although *DSU* and *Global-Tech* announced substantively the same standard, in the present case the Federal Circuit found in *Global-Tech* a significant change in the law. A careful reading of *Global-Tech* shows that it overruled the Federal Circuit's opinion in that particular case, but not *DSU*. *Global-Tech* addressed a specific and narrow question: Can a defendant be liable for inducement if it did not have actual knowledge of the patent? The Court answered this question in two steps. First, the Court held that inducement requires intent to cause a third party to infringe, not just intent to cause the third party to act in a manner that happens to be infringing. 131 S. Ct. at 2065-68. This is the same conclusion that the *en banc* Federal Circuit reached in *DSU*. *Compare Global-Tech*, 131 S. Ct. at 2067 (quoting *Metro-Goldwyn-Mayer Studios Inc. v. Grokster*, 545 U.S. 913 (2005)), *with DSU*, 471 F.3d at 1306 (same).

The second step of the Court's answer addressed an issue that *DSU* did not speak to (and that is irrelevant to the present case): What if the defendant indisputably did not have actual knowledge of the patent? In *DSU*, it was undisputed

that the defendant knew about the asserted patent. 471 F.3d at 1311 (Michel, C.J., concurring) ("There is no dispute that [the defendant] had actual knowledge of [the patent]. Accordingly, the 'knowledge of the patent' issue is not before us."). On this point, this Court disagreed with the Federal Circuit panel opinion in the *Global-Tech* case, but this disagreement did not overrule *DSU*, which did not present this issue.

In *Global-Tech*, it was undisputed that the defendant did not have actual knowledge of the asserted patent. 131 S. Ct. at 2064. The evidence showed that the defendant intentionally copied a version of the plaintiff's product, hired a patent attorney to perform a right-to-use study, declined to tell the attorney that it had copied the plaintiff's product, and then began selling its product after the attorney failed to find the relevant patent. *SEB S.A. v. Montgomery Ward & Co.*, 594 F.3d 1360, 1366 (Fed. Cir. 2010). At trial, the jury instructions provided that "Defendants cannot be liable for inducing infringement if they had no reason to be aware of the existence of the '312 patent." Respondents' Br., *Global-Tech Appliances Inc. v. SEB*, 2010 WL 5488407, at *26a (emphasis added).

On JMOL, at the Federal Circuit, and at the Supreme Court, the defendant consistently argued that a finding of inducement requires actual knowledge of the patent. *Id.* at 1367; *id.* at 1376; 131 S. Ct. at 2065 ("Pentalpha argues that active inducement liability under § 271(b) requires more than deliberate indifference to a known risk that the induced acts may violate an existing patent.

Instead, Pentalpha maintains, actual knowledge of the patent is needed."). At the Federal Circuit, the panel held that the "knowledge of the patent" requirement set forth in *DSU* could be satisfied by proof of a "deliberate[] disregard[of] a known risk" that there was a protective patent. 594 F.3d at 1376-77. This Court rejected the conclusion that knowledge of the patent could be shown by "deliberate indifference" and instead adopted the more rigorous "willful blindness" standard. *See* 131 S. Ct. at 2068 ("Returning to Pentalpha's principal challenge, we agree that deliberate indifference to a known risk that a patent exists is not the appropriate standard under § 271(b).").

Properly viewed, this Court's *Global-Tech* opinion endorsed the *DSU* intent standard for inducement and corrected a separate error relating to the "knowledge of the patent" requirement that was at issue in *Global-Tech* but not in *DSU* (or the present case). It did not, as the *Commil* panel held, overrule *DSU*. Indeed, prior to *Commil*, the Federal Circuit had repeatedly cited *DSU* and *Global-Tech* in tandem when describing the intent requirement for inducement. *See Akamai Techs., Inc. v. Limelight Networks, Inc.*, 692 F.3d 1301, 1308 (Fed. Cir. 2012) (en banc); *see also Merial Ltd. v. Cipla Ltd.*, 681 F.3d 1283, 1304 (Fed. Cir. 2012); *In re Bill of Lading Transmission & Processing Sys. Patent Litig.*, 681 F.3d 1323, 1339 (Fed. Cir. 2012).

C. The *Commil* Opinion Compounds The Confusion Created By *Global-Tech* About How A Plaintiff Can Prove That The Intent Requirement Is Satisfied

Since the *Global-Tech* opinion was issued, there has been confusion about how a plaintiff can prove that the intent requirement for inducement is satisfied.[4] The confusion generally relates to what evidence a plaintiff needs to present other than evidence that the defendant knew of the patent. The *Global-Tech* opinion strongly suggests that knowledge of the patent is sufficient to support an inducement verdict by repeatedly referring to knowledge of the patent nearly (if not entirely) synonymously with knowledge of infringement of that patent. For example:

- "Pentalpha argues that active inducement liability under § 271(b) requires more than deliberate indifference to a known risk that the induced acts may violate an existing patent. Instead, Pentalpha maintains, actual knowledge of the patent is needed." 131 S. Ct. at 2065 (emphasis added).

---

[4] There have been at least two other recent petitions for certiorari that relate to the intent requirement for inducement under *Global-Tech*. *See Artesyn Techs., Inc. v. Synqor, Inc.*, No. 13-375 (Sept. 23, 2013) (cert petition denied Nov. 18, 2013) (Federal Circuit affirmed inducement verdict where "knew or should have known" language was used in the jury instruction); *Arthrex, Inc. v. Smith & Nephew, Inc.*, No. 13-290 (Aug. 30, 2013) (cert petition denied Dec. 9, 2013).

- "On the other hand, this Court, in *Henry v. A. B. Dick Co.* . . . stated that 'if the defendants [who were accused of contributory infringement] knew of the patent and that [the direct infringer] had unlawfully made the patented article . . . with the intent and purpose that [the direct infringer] should use the infringing article . . . they would assist in her infringing use.'" *Id.* at 2066 (emphasis in original).

- "The phrase 'knowing [a component] to be especially made or especially adapted for use in an infringement' may be read to mean that a violator must know that the component is 'especially adapted for use' in a product that happens to infringe a patent. Or the phrase may be read to require, in addition, knowledge of the patent's existence." *Id.* at 2067 (emphasis added).

- "It would thus be strange to hold that knowledge of the relevant patent is needed under § 271(c) but not under § 271(b). Accordingly, we now hold that induced infringement under § 271(b) requires knowledge that the induced acts constitute patent infringement." *Id.* at 2068 (emphasis added).

- "Taken together, this evidence was more than sufficient for a jury to find

> that Pentalpha subjectively believed there was a high probability that SEB's fryer was patented, that Pentalpha took deliberate steps to avoid knowing that fact, and that it therefore willfully blinded itself to the infringing nature of Sunbeam's sales." *Id.* at 2063 (emphasis added).

The opinion ultimately concludes that evidence of willful blindness with respect to the existence of the patent was sufficient to prove inducement under the Court's holding that "induced infringement under § 271(b) requires knowledge that the induced acts constitute patent infringement." 131 S. Ct. at 2068, 2071 (emphasis added).

This approach makes sense, as it is extraordinarily unlikely that a defendant would create (and then produce during discovery) evidence that it analyzed the patent and concluded that it was valid and infringed. If such evidence were required, inducing infringement would be effectively removed from the Patent Act. By vacating an inducement verdict where the plaintiff proved that the defendant had actual knowledge of the patent (in addition to all of the other findings required by the instructions discussed above), the Federal Circuit's opinion in this case has created an anomalous situation where it appears easier to prove inducement intent where the defendant did not have actual knowledge of the patent (as in *Global-Tech*, where this Court affirmed the verdict) than it is to prove inducement where the defendant did have knowledge of the patent (as in the present case).

For example, a plaintiff who relies on a defendant's willful blindness with respect to the existence of the patent (as in *Global-Tech*) cannot be criticized for failing to present additional evidence of that defendant's more specific knowledge of the infringing nature of its customers' acts (*i.e.*, how the infringing acts map onto the particular claim language and whether that claim language may also encompasses the prior art). There obviously will be no such evidence if the defendant did not have actual knowledge of the patent. Yet in the present case, a new trial has been ordered because although Commil proved (and the jury found) that Cisco had actual knowledge of the patent and that Cisco intended to aid and abet its customers' infringement, the instructions also required the jury to find that Cisco "knew or should have known that its actions would induce actual infringement." The Court should take this opportunity to clarify that *Global-Tech* permits a jury to infer from a defendant's actual knowledge of the patent that the defendant also knew of the infringement, and that an additional finding that a party "should have known" of those actual infringements strengthens that inference. *See Farmer v. Brennan*, 511 U.S. 825, 1981 (1994) ("[I]f the risk is obvious, so that a reasonable man would realize it, we might well infer that [the defendant] did in fact realize it . . ." (quoting LaFave & Scott § 3.7, p. 335)).

CONCLUSION

For the reasons set forth above, Commil respectfully requests that the Court grant its petition for a writ of certiorari.

Respectfully Submitted,

SAYLES | WERBNER
Mark S. Werbner
Counsel of Record
Richard A. Sayles
Mark D. Strachan
Darren P. Nicholson
4400 Renaissance Tower
1201 Elm Street
Dallas, TX 75270
(214) 939-8700
(mwerbner@swtriallaw.com)

January 23, 1014

APPENDIX

TABLE OF CONTENTS

Page

Opinion of
The United States Court of Appeals for
The Federal Circuit
entered June 25, 2013 ..... 1a

Memorandum Opinion and Order of
The United States District Court for
The Eastern District of Texas
entered December 29, 2010 ..... 40a

Order of
The United States District Court for
The Eastern District of Texas
entered April 1, 2011 ..... 45a

Amended Final Judgment of
The United States District Court for
The Eastern District of Texas
entered September 28, 2011 ..... 48a

Order of
The United States Court of Appeals for
The Federal Circuit
Re: Denying Rehearing
entered October 25, 2013 ..... 50a

Statutory Provisions Involved

35 U.S.C. § 271 ..... 64a

35 U.S.C. § 282 ..... 74a

U.S. Patent No. 6,430,395 B2 ..... 77a

Excerpts of Transcript of Pretrial Hearing before
The Honorable Chad Everingham
on March 24, 2011 ..... 203a

Excerpts of Transcript of Jury Trial before
The Honorable Chad Everingham
on April 6, 2011 ..... 218a

Excerpts of Transcript of Jury Trial before
The Honorable Chad Everingham
on April 6, 2011 ..... 229a

Excerpts of Transcript of Jury Trial before
The Honorable Chad Everingham
on April 8, 2011 ..... 236a

United States Court of Appeals for the Federal Circuit

COMMIL USA, LLC,
Plaintiff-Appellee,

v.

CISCO SYSTEMS, INC.,
Defendant-Appellant.

2012-1042

Appeal from the United States District Court for the Eastern District of Texas in No. 07-CV-0341, Magistrate Judge Charles Everingham.

Decided: June 25, 2013

MARK S. WERBNER, Syles Werbner, P.C., of Dallas, Texas, argued for plaintiff-appellee. With him on the brief were RICHARD A. SAYLES and MARK D. STRACHAN. Of counsel on the brief were LESLIE V. PAYNE, NATHAN J. DAVIS and MIRANDA Y. JONES, Heim, Payne & Chorush, of Houston, Texas.

WILLIAM F. LEE, Wilmer Cutler Pickering Hale and Dorr LLP, of Boston, Massachusetts, argued for defendant-appellant. With him on the brief were MARK C. FLEMING, JONATHAN W. ANDRON and FELICIA H. ELLSWORTH; and WILLIAM G. MCELWAIN, of Washington, DC. Of counsel on the

brief were HENRY B. GUTMAN, Simpson Thacher & Bartlett LLP, of New York, New York; and JEFFREY E. OSTROW, HARRISON J. FRAHN, IV, PATRICK E. KING and JONATHAN SANDERS, of Palo Alto, California.

Before NEWMAN, PROST, and O'MALLEY, *Circuit Judges.*

Opinion for the court filed by *Circuit Judge* PROST.

Opinion concurring-in-part, dissenting-in-part filed by *Circuit Judge* NEWMAN.

Opinion concurring-in-part, dissenting-in-part filed by *Circuit Judge* O'MALLEY.

PROST, *Circuit Judge.*

Cisco Systems, Inc. appeals from the final judgment of the United States District Court for the Eastern District of Texas, which was based on the findings of two separate jury verdicts finding that: Cisco directly and indirectly infringed specified claims of Commil USA, LLC's U.S. Patent No. 6,430,395 ("'395 patent"); the specified claims of the '395 patent are not invalid as indefinite, for lack of enablement, or as lacking adequate written description; and that Cisco was liable for $63,791,153 in damages as well as pre-judgment interest and costs. We find that the district court gave the jury a legally erroneous instruction with respect to indirect infringement. Additionally, we find that Cisco's evidence of a good-faith belief of invalidity may negate the requisite intent for induced infringement. However, we find that the

district court did not err in granting a partial new trial. Thus, we affirm-in-part, vacate-in-part, and remand for further proceedings consistent with this opinion.

I. BACKGROUND

A. THE PATENT AND ACCUSED PRODUCTS

In a wireless system, mobile devices such as phones and laptop computers communicate with fixed "base stations" according to standardized procedures that govern the way in which data exchanged between devices is formatted, ordered, maintained, and transmitted. These procedures are referred to as "protocols." Effective wireless communication requires that the transmitting device and the receiving device follow the same protocol.

The '395 patent relates to a method of providing faster and more reliable handoffs of mobile devices from one base station to another as a mobile device moves throughout a network area. The '395 patent teaches that the communication protocol is divided based on time sensitivity. The portions of the protocol requiring accurate time synchronization—"real-time capabilities"—are performed at the base station. This part of the protocol is called the "low-level protocol." Other parts of the protocol that are not time-sensitive comprise the "high-level protocol, "which is performed on another device called a switch. The base station and switch cooperate to handle a connection with a mobile unit. To implement the full communications protocol, the base station runs an instance of the low-level

protocol for the connection and the switch runs a corresponding instance of the high-level protocol.

Cisco is a major supplier of WiFi access points and controllers. Commil alleges that certain Cisco access points and controllers infringe claims 1, 4, and 6 of the'395 patent. Claim 1, the patent's sole independent claim, provides:

> In a wireless communication system comprising at least two Base Stations, at least one Switch in communication with the Base Stations, a method of communicating between mobile units and the Base Stations comprising:
>
> dividing a short-range Communication protocol into a low-level protocol for performing tasks that require accurate time synchronization and a high-level protocol which does not require accurate time synchronization; and
>
> for each connection of a mobile unit with a Base Station, running an instance of the low-level protocol at the Base Station connected with the mobile unit and running an instance of the high-level protocol at the Switch.

B. THE DISTRICT COURT PROCEEDINGS

A jury trial commenced on May 10, 2010. On May 17, 2010, the jury returned a verdict rejecting Cisco's invalidity contentions, finding Cisco liable for direct infringement, and awarding Commil $3.7

million in damages. The jury also found that Cisco was not liable for induced infringement. Commil filed a motion for a new trial on the issues of induced infringement and damages, which the court granted on December 29, 2010.

On April 5, 2011, a second trial was held with respect to indirect infringement and damages. On April 8, 2011, the jury returned a verdict in favor of Commil on both issues and this time awarded $63.7 million in damages. On September 28, 2011, the district court entered an amended final judgment granting $63.7 million in actual damages, $10.3 million in prejudgment interest, and $17,738 in costs. This appeal followed.

II. DISCUSSION

Cisco appeals the district court decision on several grounds. First, Cisco contends that an erroneous instruction allowed the jury to find inducement based on mere negligence. Second, Cisco argues that the district court erroneously precluded Cisco from presenting evidence of its good-faith belief of invalidity to show that it lacked the requisite intent to induce infringement of the asserted claims. Third, Cisco argues that the district court abused its discretion in granting a new trial and that the district court violated the Seventh Amendment by granting a new trial on certain issues, but not others. Fourth, Cisco claims the court erred in construing the term "short-range communication protocol." Fifth, Cisco argues that there is not substantial evidence to sustain the jury verdict on infringement. Sixth, Cisco contends the claims are indefinite, not enabled, and lacking

adequate written description. Finally, Cisco objects to the damages award on the grounds that Commil's royalty base violates the entire market value rule. We take each of these issues in turn.

A. THE JURY INSTRUCTION

Before the district court and on appeal, Cisco challenged the second trial's jury instruction on induced infringement. The district court denied Cisco's motion for a new trial on the jury instruction issue. We review the denial of a motion for a new trial under the law of the regional circuit. *Riverwood Int'l Corp. v. R.A. Jones & Co.*, 324 F.3d 1346, 1352 (Fed. Cir. 2003). In the Fifth Circuit, the denial of a motion for a new trial "will not be disturbed absent an abuse of discretion or a misapprehension of the law." *Prytania Park Hotel v. Gen. Star Indem. Co.*, 179 F.3d 169, 173 (5th Cir. 1999). Whether a jury instruction on an issue of patent law is erroneous is a matter of Federal Circuit law that is reviewed de novo. *Sulzer Textil A.G. v. Picanol N.V.*, 358 F.3d 1356, 1363 (Fed. Cir. 2004) (citing *Advanced Display Sys., Inc. v. Kent State Univ.*, 212 F.3d 1272, 1282 (Fed. Cir. 2000)).We will set aside the jury verdict, "if the movant can establish that 'those instructions were legally erroneous,' and that 'the errors had prejudicial effect.'" *Id.* (citations omitted). In reviewing jury instructions, we review the trial record and the jury instructions in their entirety. *Id.*

At the second trial, the court instructed the jury that it could find inducement if "Cisco actually intended to cause the acts that constitute direct infringement and that Cisco knew or should have known that its actions would induce actual

infringement." J.A. 6389 (98:2499:2). The "knew or should have known" language is a verbatim recitation of the standard for showing induced infringement we originally set forth in *Manville Sales Corp. v. Paramount Sys., Inc.*, 917 F.2d 544, 553 (Fed. Cir. 1990). This court, sitting en banc, again approved this language in *DSU Medical Corp. v. JMS Co., Ltd.*, 471 F.3d 1293, 1306 (Fed. Cir. 2006) (en banc). Cisco alleges that this instruction allowed the jury to find inducement on the showing of mere negligence and, as such, is legally erroneous in view of the Supreme Court's recent decision in *Global-Tech Appliances, Inc. v. SEB S.A.*, 131 S. Ct. 2060 (2011).

The *Global-Tech* Court held that induced infringement "requires knowledge that the induced acts constitute patent infringement." *Id.* at 2068. The knowledge requirement of *Global-Tech* may be satisfied by showing actual knowledge or willful blindness. *Id.* at 2072. In reaching this conclusion the Court expressly distinguished actual knowledge and willful blindness from recklessness and negligence explaining that:

> [A] willfully blind defendant is one who takes deliberate actions to avoid confirming a high probability of wrongdoing and who can almost be said to have actually known the critical facts. By contrast, a reckless defendant is one who merely knows of a substantial and unjustified risk of such wrongdoing and a negligent defendant is one who should have known of a similar risk but, in fact, did not.

Id. at 2070-71 (citations omitted). The Court acknowledged that the facts that must be adduced to find willful blindness prevent such a finding on facts that support only recklessness or negligence. *Id.* Moreover, the Court rejected the standard set forth by this court, in part, because it permitted "a finding of knowledge when there is merely a 'known risk' that the induced acts are infringing." *Id.* at 2071.

Commil contends that the jury instruction in this case merely allowed the jury to find knowledge based upon circumstantial evidence. Circumstantial evidence can, of course, support a finding of actual knowledge or willful blindness just as it did in *Global-Tech*. *Id.* at 2071-72. The jury instruction in this case, however, was not so limited. While the court did instruct the jury that certain circumstantial evidence could support a finding of inducement, the present jury instruction plainly recites a negligence standard, which taken literally, would allow the jury to find the defendant liable based on mere negligence where knowledge is required. J.A. 6389 (98:1999:15). Therefore, to the extent our prior case law allowed the finding of induced infringement based on recklessness or negligence, such case law is inconsistent with *Global-Tech* and no longer good law. It is, therefore, clear that the jury instruction in this case was erroneous as a matter of law. This finding, however, does not end our inquiry.

In order to set aside a jury verdict, we must find not only that the jury instruction was legally erroneous, but also that the instruction had a prejudicial effect. *Sulzer Textil*, 358 F.3d at 1364 ("[I]t is not enough to merely show that a jury

instruction is erroneous; [petitioner] also must show that the erroneous jury instruction was prejudicial."). If the erroneous jury instruction "could not have changed the result, the erroneous instruction is harmless." *Environ Prods., Inc. v. Furon Co.*, 215 F.3d 1261, 1266–67 (Fed. Cir. 2000). Commil contends that when viewed as a whole, the jury instruction required the jury to find facts that satisfy the *Global-Tech* standard and, therefore, there is no prejudicial effect. We cannot agree.

A finding of inducement requires both knowledge of the existence of the patent and "knowledge that the induced acts constitute patent infringement." *Global-Tech*, 131 S. Ct. at 2068; *see also DSU Med. Corp.*, 471 F.3d at 1306 (explaining that an "alleged infringer must be shown . . . to have *knowingly* induced infringement," not merely knowingly induced the acts that constitute direct infringement" (citation omitted)). Here, the jury was clearly instructed that Cisco could not be liable for induced infringement if it was not aware of the '395 patent. The jury was also instructed that Cisco must have actively and knowingly aided and abetted direct infringement. The jury, however, was not instructed that in order to be liable for induced infringement, Cisco must have had knowledge that the induced acts constitute patent infringement. On the contrary, the jury instruction allowed Cisco to be held liable if "Cisco knew or should have known that its actions would induce direct infringement." J.A. 6389 (99:10-11). With respect to whether the induced acts constitute patent infringement, it is clear that the jury was permitted to find induced infringement based on mere negligence where knowledge is required. This erroneous instruction certainly could

have changed the result. Facts sufficient to support a negligence finding are not necessarily sufficient to support a finding of knowledge. Accordingly, we vacate the jury's verdict on induced infringement and remand for a new trial. Because we vacate the induced infringement verdict upon which the damages award is based, we also vacate the damages award.

B. Cisco's Good-Faith Belief of Invalidity

Cisco further contends that the district court erred in preventing Cisco from presenting evidence during the second trial of its good-faith belief of invalidity to rebut Commil's allegations of induced infringement. We agree.

Prior to the second trial, Cisco proffered evidence to support its good-faith belief that the '395 patent is invalid. Commil filed a motion in limine to exclude this evidence, which the district court granted without written opinion. It is not entirely clear from the record why the district court precluded Cisco from presenting its evidence. However, during a colloquy with Cisco's counsel at a pretrial hearing, the district court appeared to base its decision on the fact that our precedent indicates that such evidence is relevant where it relates to a good-faith belief of non-infringement, but is silent with respect to invalidity. J.A. 6061-63. It is true, as the district court noted, that we appear to have not previously determined whether a good-faith belief of invalidity may negate the requisite intent for induced infringement. We now hold that it may.

Under our case law, it is clear that a good-faith belief of non-infringement is relevant evidence that tends to show that an accused inducer lacked the intent required to be held liable for induced infringement. *See DSU Med. Corp.*, 471 F.3d at 1307 (finding a demonstrated belief of non-infringement sufficient to support a jury verdict that the defendant did not induce infringement); *Ecolab, Inc. v. FMC Corp.*, 569 F.3d 1335, 1351 *amended on reh'g in part*, 366 F. App'x 154 (Fed. Cir. 2009) (finding that a reasonable belief of non-infringement supported a jury verdict that the defendant lacked the intent required for induced infringement); *Kinetic Concepts, Inc. v. Blue Sky Med. Grp., Inc.*, 554 F.3d 1010, 1025 (Fed. Cir. 2009) (holding that defendant's "belief that it can freely practice inventions found in the public domain" supports "a jury's finding that the intent required for induced infringement was lacking"); *Bettcher Indus., Inc. v. Bunzl USA, Inc.*, 661 F.3d 629, 649 (Fed. Cir. 2011) (finding opinion of counsel regarding non-infringement "admissible, at least with respect to [defendant]'s state of mind and its bearing on indirect infringement"). We see no principled distinction between a good-faith belief of invalidity and a good-faith belief of non-infringement for the purpose of whether a defendant possessed the specific intent to induce infringement of a patent.

It is axiomatic that one cannot infringe an invalid patent. *See, e.g., Prima Tek II, L.L.C. v. Polypap, S.A.R.L.*, 412 F.3d 1284, 1291 (Fed. Cir. 2005) ("there can be no . . .induced infringement of invalid patent claims"); *Richdel, Inc. v. Sunspool Corp.*, 714 F.2d 1573, 1580 (Fed. Cir. 1983) ("The claim being invalid there is nothing to be

infringed."). Accordingly, one could be aware of a patent and induce another to perform the steps of the patent claim, but have a good-faith belief that the patent is not valid. Under those circumstances, it can hardly be said that the alleged inducer intended to induce infringement. Thus, a good-faith belief of invalidity is evidence that may negate the specific intent to encourage another's infringement, which is required for induced infringement. Several district courts have considered this question and come to the same conclusion. *See VNUS Med. Techs., Inc. v. Diomed Holdings, Inc.*, 2007 WL 2900532, at * 1 (N.D.Cal. Oct. 2, 2007) (denying plaintiff's motion for summary judgment on induced infringement based, in part, on an opinion of counsel that the patents in-suit were invalid"); *Kolmes v. Worm Elastic Corp.*, 1995 WL 918081, at * 10 (M.D.N.C. Sept. 18, 1995) (finding, after a bench trial, no intent to induce infringement where defendants "had a good faith belief in the invalidity" of the patent-in-suit); *DataQuill Ltd. v. High Tech Computer Corp.*, 2011 WL 6013022, at *10 (S.D. Cal. Dec. 1,2011) (indicating that a belief of invalidity may present a triable issue of fact as to intent to induce infringement); *see also* Lemley, *Inducing Patent Infringement*, 39 U.C. Davis. L. Rev. 225,243 (2005) ("[I]t is not reasonable to assume that merely because a defendant is aware of the existence of a patent, he intended to infringe it. He may believe the patent invalid"); *but see Applera Corp. v. MJ Research Inc.*, 2004 WL 367616, at *1 (D. Conn. Feb. 24, 2004); *LadaTech, LLC v. Illumina, Inc.*, 2012 WL 1188266, at *2 (D. Del. Feb. 14, 2012).

We now hold that evidence of an accused inducer's good-faith belief of invalidity may negate

the requisite intent for induced infringement.[1] This is, of course, not to say that such evidence precludes a finding of induced infringement. Rather, it is evidence that should be considered by the fact-finder in determining whether an accused party knew "that the induced acts constitute patent infringement." *Global-Tech*, 131 S. Ct. at 2068.

C. THE GRANT OF A SECOND TRIAL

Cisco challenges the district court's grant of a new trial on two fronts. First, Cisco argues that there was no basis for granting a new trial. Second, Cisco argues that even if a new trial was proper, the partial new trial violated the Seventh Amendment. We discuss these issues seriatim.

1. THE FIRST TRIAL

The district court proceedings in this case were unusual. Commil is based in Israel and the inventors of the '395 patent are Israeli. Throughout the trial, according to the district court, Cisco's trial counsel attempted to play upon religious prejudices and ethnic stereotypes.

For instance, during the cross-examination of Jonathan David, a co-owner of Commil who is Jewish, Cisco's counsel attempted to perpetuate the

---

[1] In dissent, Judge Newman does little more thanconstruct a straw man and set him ablaze. We certainly do not hold "that if the inducer of infringement believes in good faith that the patent is invalid, there can be noliability for induced infringement." J. Newman Op. concurring-in-part, dissenting-in-part 1. Nor do we "include a belief in patent validity as a criterion of infringement." *Id.* at 4.

stereotype of Jewish people as greedy opportunists by asking Mr. David if his cousin was a "bottom-feeder who swim[s] around on the bottom buying people's houses that they got kicked out of for next to nothing." J.A. 5823 (139:19-140:1). Later, when Mr. David mentioned dining at a local barbeque restaurant, Cisco's counsel quipped, "I bet not pork." J.A. 5825 (146:4-24). Following the pork comment, the court questioned counsel on the relevance of his statement and issued a curative instruction stating:

> Sometimes when a lawyer injects irrelevant information into a case it's because he perceives a weakness in the merits of his case. I don't know whether that's why it happened in this case, but you can consider that as you're evaluating the testimony and the evidence in this case.

J.A. 5838 (2:25-3:9).

Despite the potent curative instruction and the court's clear displeasure, in his closing, counsel again made several irrelevant and prejudicial remarks. Counsel's behavior reached a new low when he began his closing argument with a reference to the trial of Jesus Christ, stating:

> Ladies and Gentlemen of the Jury, you are, in this case, truth-seekers. You are charged with the most important job in this courtroom, and that's determining the truth. . . . And when you figure out what the truth is, you'll know how to answer that verdict form. You

> remember the most important trial in history, which we all read about as kids, in the Bible had that very question from the judge. What is truth?

J.A. 6038 (16:1-16).[2]

After discharging the jury, the court again expressed displeasure with Cisco's counsel and informed Commil that should they file it, a motion for a new trial would be entertained. Shortly thereafter, Commil filed a motion for a new trial on the issues of indirect infringement and damages. In ruling on the motion, the court found that when counsel's comments regarding the trial of Jesus were viewed in context with other comments regarding Mr. David and the inventors Jewish heritage, it was clear that counsel was attempting to align his "religious preference with that of the jurors and employs an 'us v. them' mentality–i.e., 'we are Christian and they are Jewish.'" *Commil USA, LLC v. Cisco Sys., Inc.*, No. 2:07-CV-341, slip op. at 3 (E.D. Tex. Dec. 29, 2010). The court granted the motion, finding that the comments prejudiced the jury with respect to indirect infringement and damages. Cisco filed a motion for reconsideration, which the court denied.

---

[2] Cisco was not alone in its attempt to curry favor with the jury through the use of religious references. For instance, during the voir dire, Commil's counsel explained that the case began in Israel, "the Holy Land for many religions." J.A. 5686 (25:11-13). Later, during closing argument, Commil's counsel argued with respect to damages that Cisco wanted the jurors to "split the baby"and "[y]ou know, that wasn't wise at the time of King Solomon. It's not wise today." J.A. 6047 (52:3-9).

1. GRANT OF A NEW TRIAL

We review issues not unique to patent law, such as the grant of a new trial based on the prejudicial remarks of counsel, under regional circuit law. *Riverwood Int'l Corp.*, 324 F.3d at 1352. The Fifth Circuit reviews rulings on new trial motions for abuse of discretion, with more exacting review applied to orders granting a new trial than to those denying them. *Conway v. Chem. Leaman Tank Lines, Inc.*, 610 F.2d 360, 362-363 (5th Cir. 1980). "[A] new trial will not be granted, even if counsel's remarks are improper, unless after considering the record as a whole the court concludes that manifest injustice would result from letting the verdict stand." *Gautreaux v. Scurlock Marine, Inc.*, 84 F.3d 776, 783 (5th Cir. 1996).This is particularly the case where, as here, the statements drew no objection from the opposing party: "[I]mproper argument may be the basis for a new trial where no objection has been raised only 'where the interest of substantial justice is at stake.'" *Hall v. Freese*, 735 F.2d 956, 961 (5th Cir. 1984) (quoting *Edwards v. Sears, Roebuck & Co.*, 512 F.2d 276, 286 (5th Cir. 1975)).

As discussed *supra*, the district court granted a new trial based on what it viewed as the prejudicial effect of inflammatory statements made by Cisco's counsel during trial. Cisco claims that the statements do not warrant a new trial. Cisco asks us to review the cold record—substituting our judgment for the district court's—and find that there was no manifest injustice in this case. We decline.

In reviewing the district court's ruling, it is clear that the court did not abuse its discretion.

There is ample evidence from which the district court could conclude that the jury was biased by Cisco's actions. Throughout trial, Cisco attempted to instill in the jury, through irrelevant references to ethnicity and religion, an "us versus them" mentality. Cisco persisted in its course of conduct even after the court warned counsel and issued a curative instruction. And, in a case involving Jewish inventors and plaintiffs, Cisco's counsel began his closing argument with a reference to the trial of Jesus Christ.

Even if we were inclined to agree with Cisco that there is no manifest injustice in this case—and we are not—we refuse to substitute our judgment for that of a district court whose "on-the-scene assessment of the prejudicial effect, if any, carries considerable weight." *United States v. Munoz*, 150 F.3d 401, 415 (5th Cir. 1998).Accordingly, we find that the district court did not abuse its discretion in granting a new trial.

2. PARTIAL NEW TRIAL

The Federal Rules of Civil Procedure allow the courts to grant partial new trials so long as the issues are "distinct and separable." Fed. R. Civ. P. 59. A court's authority to grant a partial new trial is likewise constrained by the Seventh Amendment. *Gasoline Prod. Co. v. Champlin Refining Co.*, 283 U.S. 494, 500 (1931). "Where the practice permits a partial new trial, it may not properly be resorted to unless it clearly appears that the issue to be retried is so distinct and separable from the others that a trial of it alone may be had without injustice." *Id.* A partial new trial should not be granted where the

issues to be retried are "so interwoven" with other issues in the case "that the former cannot be submitted to the jury independently of the latter without confusion and uncertainty." *Id.* We have explained, however, that the Seventh Amendment "prohibition is not against having two juries review the same *evidence*, but rather against having two juries *decide* the same *essential issues*." *In re Innotron Diagnostics*, 800 F.2d 1077, 1086 (Fed. Cir. 1986) (citation omitted). Trying issues separately is appropriate where "separate trials would not constitute a 'clear and indisputable' infringement of the constitutional right to a fair trial. *Id.* (citing *Bankers Life & Casualty Co. v. Holland*, 346 U.S. 379, 384 (1953).

Cisco contends that the district court violated the Seventh Amendment by granting a new trial on the issues of induced infringement and damages, but not direct infringement and validity. Specifically, Cisco contends, under the circumstances of this case, indirect infringement is not distinct and separable from validity, but rather, they are inextricably intertwined. Cisco argues that where the plaintiff alleges induced infringement and the defendant has evidence of a good-faith belief of invalidity, the issues of validity and induced infringement are not distinct and separable. We disagree.

We note at the outset that "patent infringement and invalidity are separate and distinct issues." *Pandrol USA, LP v. Airboss Ry. Prod., Inc.*, 320 F.3d 1354, 1364-65 (Fed. Cir. 2003). Indeed, this court routinely orders a partial new trial on infringement, while upholding an earlier verdict on validity. *See, e.g., Cardiac Pacemakers, Inc. v. St.*

Jude Med., Inc., 381 F.3d 1371, 1374 (Fed. Cir. 2004); *Comaper Corp. v. Antec, Inc.*, 596 F.3d 1343, 1354-55 (Fed. Cir. 2010).

We previously rejected the "argument that, under the Seventh Amendment, a new trial on willfulness would require a new trial on infringement." *Voda v. Cordis Corp.*, 536 F.3d 1311, 1329 (Fed. Cir. 2008). In order to prove that infringement was willful, a plaintiff must show both that "an infringer acted despite an objectively high likelihood that its actions constituted infringement of a valid patent" and that the "objectively-defined risk (determined by the record developed in the infringement proceeding) was either known or so obvious that it should have been known to the accused infringer." *In re Seagate Tech., LLC*, 497 F.3d 1360, 1371 (Fed. Cir. 2007). "[T]he objective prong of *Seagate* tends not to be met where an accused infringer relies on a reasonable defense to a charge of infringement. Thus, the question on appeal often posed is whether a defense or non-infringement theory was reasonable." *Bard Peripheral Vascular, Inc. v. W.L. Gore & Assocs., Inc.*, 682 F.3d 1003, 1005-06 (Fed. Cir. 2012) *cert. denied*, 133 S. Ct. 932 (2013). In such a case, in order to find that infringement was not willful, the defendant's non-infringement theory must be reasonable. The question of a non-infringement theory's reasonableness often requires looking at the merits of non-infringement. Yet, a new trial on willfulness does not require a new trial on infringement. *See Voda*, 536 F.3d at 1329. We believe the situation in the present case to be analogous.

We acknowledge that the current case presents a unique situation where a jury considering induced infringement, but not validity, may be asked to consider evidence of invalidity in order to decide whether Cisco possessed a good-faith belief of invalidity. Nonetheless, the fact that a second jury will consider evidence of invalidity that supports Cisco's position on the good-faith belief issue does not compel the conclusion that the second jury will decide the ultimate issue of invalidity. Indeed, the issue of whether Cisco possessed a good-faith belief of invalidity is distinct and separate from the issue of whether the patent claims are invalid. In order to determine that Cisco had a good-faith belief of invalidity, the jury must merely decide whether Cisco possessed that belief in good-faith. The jury need not decide whether the underlying position was meritorious. Thus, although the two juries will review the same evidence of invalidity, they will not decide the same essential issues. Therefore, we cannot say that separate trials on invalidity and induced infringement would constitute a clear and indisputable infringement of the constitutional right to a fair trial. Accordingly, we find that holding separate trials on the issues of invalidity and induced infringement does not violate the Seventh Amendment.

D. Claim Construction and the Merits

Cisco challenges the district court's construction of the term "short-range communication protocol." The court construed this term to mean "a set of procedures required to initiate and maintain short-range communication between two or more devices." *Commil USA, LLC v. Cisco Sys., Inc.*, 2:07-

CV-341, slip op. at 1 (E.D. Tex. Nov. 6, 2009). Cisco's argument is without merit. Cisco does not contend that a "short-range communication protocol" is not "a set of procedures required to initiate and maintain short-range communication between two or more devices."Rather, Cisco asks this court, as it did the district court, to limit the term to only those specific short-range communication protocols listed in the patent. We decline. *See Phillips v. AWH Corp.*, 415 F.3d 1303, 1323-24 (Fed. Cir. 2005) (cautioning against importing limitations from the specification into the claims).

Cisco also appeals the district court's findings regarding validity, infringement, and damages. Cisco argues that the claims are invalid for reasons of indefiniteness, non-enablement, and lack of written description. We find these contentions without merit. Because we remand for a new trial, we do not reach the issues of infringement and damages. Rather, we leave them to be decided by the district court in first instance.

AFFIRM-IN-PART, VACATE-IN-PART, AND REMAND

United States Court of Appeals for the Federal Circuit

COMMIL USA, LLC,
Plaintiff-Appellee,

v.

CISCO SYSTEMS, INC.,
Defendant-Appellant.

2012-1042

Appeal from the United States District Court for the Eastern District of Texas in No. 07-CV-0341, Magistrate Judge Charles Everingham.

NEWMAN, *Circuit Judge*, concurring in part, dissenting in part.

I agree that remand is appropriate, and I agree that in this case a partial retrial was within the district court's discretion.

However, I respectfully dissent from the change of law set forth in Part II.B of the court's opinion. The court holds that if the inducer of infringement believes in good faith that the patent is invalid, there can be no liability for induced infringement, although the patent is held valid. The opinion makes clear that the court intends to adjust the law, as in statements including:

> *We now hold* that evidence of an accused inducer's good-faith belief of invalidity may negate the requisite intent for induced infringement. . .

Maj. op. at 11 (emphasis added). This change in the law of induced infringement is inappropriate.

A good-faith belief of patent invalidity may be raised as a defense to willfulness of the infringement, but it is not a defense to the fact of infringement. Patent invalidity, if proved, eliminates an invalid patent and thus is a total defense to infringement. However, a "good-faith belief" in invalidity does not avoid liability for infringement when the patent is valid.[1] No rule eliminates infringement of a valid patent, whether the infringement is direct or indirect.

The "inducement" statute, 35 U.S.C. §271(b), serves a different purpose. The inducement statute is designed to allow remedy against an entity that provides an infringing product or method to direct infringers, but is not itself a direct infringer. The inducement statute does not import a validity criterion, or a "good faith belief" about validity, into proof of the act of infringement. *See Akamai Techs., Inc. v. Limelight Networks, Inc.*, 692 F.3d 1301, 1308 n.1 (Fed. Cir. 2012) (en banc) ("Because liability for inducement, unlike liability for direct infringement,

---

[1] The *Prima Tek* and *Richdel* cases cited in the court's opinion do not state otherwise. *See Prima Tek II, L.L.C. v. Polypap, S.A.R.L.*, 412 F.3d 1284, 1285 (Fed. Cir. 2005) (declining as "moot" to address liability for infringement of an invalid patent); *Richdel, Inc. v. Sun-spool Corp.*, 714 F.2d 1573, 1580 (Fed. Cir. 1983) (same).

requires specific intent to cause infringement, using inducement to reach joint infringement does not present the risk of extending liability to persons who may be unaware of the existence of a patent or even unaware that others are practicing some of the steps claimed in the patent.").

The majority's view that a belief in invalidity can negate infringement is contrary to the principles of tort liability, codified in the inducement statute. Liability for induced infringement is akin to "liability . . . under a theory of joint tort feasance, wherein one who intentionally caused, or aided and abetted, the commission of a tort by another was jointly and severally liable with the primary tortfeasor." *Hewlett-Packard Co. v. Bausch & Lomb Inc.*, 909 F.2d 1464, 1469 (Fed. Cir. 1990); *see also Global-Tech Appliances, Inc. v. SEB S.A.*, 131 S. Ct. 2060, 2067 (2011) (recognizing that §271(b) codified pre-1952 case law, wherein induced infringement "was treated as evidence of 'contributory infringement,' that is, the aiding and abetting of direct infringement by another party"); H.R. Rep. No. 82–1923, at 9 (1952) (explaining that the new subsection (b) "recites in broad terms that one who aids and abets an infringement is likewise an infringer.").

A mistake of law, even if made in good faith, does not absolve a tortfeasor. "Our law is . . . no stranger to the possibility that an act may be 'intentional' for purposes of civil liability, even if the actor lacked actual knowledge that her conduct violated the law." *Jerman v. Carlisle, McNellie, Rini, Kramer & Ulrich LPA*, 130 S. Ct. 1605, 1612 (2010). "If one intentionally interferes with the

interests of others, he is often subject to liability notwithstanding the invasion was made under an erroneous belief as to some legal matter that would have justified the conduct." *Id.* (quoting W. Keeton, D. Dobbs, R. Keeton& D. Owen, Prosser and Keeton on Law of Torts 110 (5thed. 1984)). A trespass "can be committed despite the actor's mistaken belief that she has a legal right to enter the property." *Id.* (citing Restatement (Second) of Torts §164, & cmt. e (1963–1964)). "[P]atent validity is a question of law," *CSIRO v. Buffalo Technology (USA), Inc.*, 542 F.3d 1363, 1375 (Fed. Cir. 2008), and an "erroneous belief" of the "legal matter" of validity does not excuse the violation. *Jerman*, 130 S. Ct. at 1612.

A defendant's ultimate liability for induced infringement, as for direct infringement, is subject to various defenses including patent invalidity and unenforceability. However, whether there is infringement in fact does not depend on the belief of the accused infringer that it might succeed in invalidating the patent. Such a belief, even if held in good faith, does not negate infringement of a valid and enforceable patent. This rule applies, whether the infringement is direct or indirect. My colleagues err in holding that "evidence of an accused inducer's good-faith belief of invalidity may negate the requisite intent for induced infringement." Maj. op. at 11.

The Court stated in *Global-Tech* that "induced infringement under section 271(b) requires knowledge that the induced acts constitute patent infringement." 131 S. Ct. at 2068. The Court did not include a belief in patent validity as a criterion of infringement. *Global-Tech* does not hold that if the

inducer "believed" that the patent is invalid, the inducer avoids infringement when, as here, validity is sustained.

Validity of the Commil patent was sustained by the jury, sustained by the district court, and sustained by this court. Whatever Cisco's "belief" as to invalidity of the patent, this belief is irrelevant to the fact and law of infringement. A belief of invalidity cannot avoid liability for infringement of a patent whose validity is sustained. The panel majority's contrary holding is devoid of support in law and precedent.

The district court applied the correct law, and excluded the issue of validity from its retrial of the issue of infringement. My colleagues now hold that although validity was found and sustained at trial, "the district court erred in preventing Cisco from presenting evidence during the second trial of its good-faith belief in invalidity to rebut Commil's allegations of induced infringement." Maj. op. at 8–9. The court mis-cites the *Global-Tech* ruling concerning the inducer's knowledge "that the induced acts constitute patent infringement," maj. op. at 11, for *Global-Tech* relates to knowledge of infringement, not knowledge of validity.

The fact of infringement does not depend on whether the inducer's view of patent validity is held in good faith or bad faith. Validity and infringement are distinct issues, bearing different burdens, different presumptions, and different evidence. Although the court now acknowledges that "patent infringement and invalidity are separate and distinct issues," maj. op. at 16, the court holds that

on this third infringement trial the jury "may be asked to consider evidence of invalidity." Maj. op. at 17. If the jury is required to consider evidence of invalidity, as the court holds, it strains fairness to deny Cisco's request for redetermination of the issue of validity.

I respectfully dissent from the court's incorrect statement of the law of induced infringement, and from the holding that a showing of a good faith belief in patent invalidity can avoid all liability for induced infringement of a valid patent.

United States Court of Appeals for the Federal Circuit

COMMIL USA, LLC,
Plaintiff-Appellee,

v.

CISCO SYSTEMS, INC.,
Defendant-Appellant.

2012-1042

Appeal from the United States District Court for the Eastern District of Texas in No. 07-CV-0341, Magistrate Judge Charles Everingham.

O'MALLEY, *Circuit Judge*, concurring in part and dissenting in part.

I agree in large measure with the majority's thoughtful opinion in this case. First, I agree that the induced infringement judgment and award must be vacated. Like Judge Prost, I believe this is so both because the trial court instructed the jury to apply an incorrect legal standard during its deliberations and because the court erred in excluding evidence regarding Cisco's alleged good faith belief in the invalidity of the asserted claims of the '395 patent. On the latter point, I agree that an accused inducer's good faith belief of invalidity of a patent claim is relevant to its intent to induce

infringement of that claim and is, thus, admissible for that purpose.

I also agree that Cisco's objections to the trial court's construction of the claim term "short range communication protocol" are not well taken. Contrary to Cisco's contentions, the '395 patent's written description does not limit the short-range communication protocol to Bluetooth and related protocols. Instead, the patent consistently refers to such protocols as exemplary. *See, e.g.*, '395 patent at col. 18, ll. 23–24 ("Bluetooth wireless technology is an example of such a short-range communication protocol."); col. 8, ll. 41–46. We have expressly stated that we do not limit the scope of the claims to the preferred embodiment described in the written description. *See Phillips v. AWH Corp.*, 415 F.3d 1303, 1323 (Fed. Cir. 2005) ("[W]e have expressly rejected the contention that if a patent describes a single embodiment, the claims of the patent must be construed as being limited to that embodiment.").

Finally, I agree that the trial judge acted within his discretion in granting a new trial following the first trial involving these parties and these patent claims. Cisco does not deny that its local counsel's conduct was reprehensible, nor does it debate whether *some* curative action was appropriate. Cisco simply asks that we substitute our judgment for that of the trial court with respect to whether that curative action should have been a new trial. I agree with the majority that it is appropriate to defer to the trial court's first-hand assessment of whether counsel's conduct was sufficiently improper as to call into question the integrity of the jury's verdict. Accordingly, while it may be true that a

different jurist might have refused to set aside the jury's verdict in these circumstances, the decision to do so here should not be reversed.[1]

Having set out those places where I agree with the majority's resolution of this appeal, I turn to the two decisions over which I must part company with my colleagues. First, I cannot endorse the majority's refusal to address Cisco's potentially dispositive arguments regarding whether Commil did or ever could prove the third-party direct infringement which is a necessary predicate to Commil's induced infringement claim. Next, I disagree with the majority's conclusion that the trial court's decision to order only a partial retrial of the issues presented is defensible; I believe the partial retrial order deprived Cisco of its right to a jury trial as guaranteed by the Seventh Amendment to the United States Constitution and must be reversed. I believe, therefore, that we should not address the strength of Cisco's validity arguments based on the record from the first trial and should leave those questions to the third jury to visit this matter.

I address these disagreements in turn.

I

Cisco argues that the trial court erred in denying its request for judgment as a matter of law

---

[1] Where, as here, counsel for both parties made improper comments during the trial, the trial court's curative instructions were—as the majority describes it—quite "potent," and Commil did not ask for a new trial until invited to do so by the trial court, it also would have beenwell within the bounds of the trial court's discretion to *not* order a retrial. On this record, either conclusion would be defensible.

on Commil's induced infringement claim because Commil failed to prove—and allegedly cannot prove—that any third-party practices all of the steps of the method claimed in claim 1of the '395 patent. Specifically, Cisco asserts that its customers do not perform (1) the step of "dividing" the communications protocol into two smaller protocols or, (2)the step of "running an instance" of the low-level protocol at the base station and "running an instance" of the high-level protocol at the switch. Cisco asserts that only it—and not its customers—practices the "dividing" step because the WiFi protocol is divided into high-and low-level protocols at the factory when the products are created. Because of this, Cisco asserts that its customers cannot perform this step and, thus, do not directly infringe claim 1. With respect to the "running an instance step," Cisco asserts that, in its WiFi system, the access points run only a single copy of the protocol that communicates with all of the connected devices, and do not run separate copies of the low-level protocols with respect to each mobile unit or device to which the access point is connected. If one or both of these steps of the claimed method are not, in fact, practiced by its customers, Cisco is correct that Commil's claims of induced infringement—predicated as they are on claims of single party direct infringement—must fail.[2]

---

[2] Cisco correctly points out that Commil never asserted a divided infringement theory, that the parties jointly asked the court to omit any divided infringement discussion from its instructions to the jury, and that the jury was instructed, without objection, that it could find induced infringement by Cisco only if it first found that "a single party performs each and every step of the claimed method."

On appeal, Cisco asks that we reverse the trial court's denial of its motion for judgment as a matter of law on these grounds and enter judgment in its favor. It contends that we need not reach the propriety of the trial court's inducement instructions or evidentiary rulings, or the need for a new trial based on errors therein, because Commil failed to prove the direct infringement predicate for its induced infringement claim. Cisco contends that these questions are dispositive of the induced infringement claims and that the need for a new trial could be obviated by their resolution.

Whatever the merits of Cisco's argument regarding the direct infringement aspect of Commil's induced infringement claim, Cisco is correct that it is within the scope of our authority on this record to resolve them now. Indeed, I believe it is our obligation to do so. If we send this matter back for a new trial on induced infringement without resolving these issues, we likely will see the case return in much the same posture. If a new panel ultimately concludes Cisco is correct as to either one of the required steps of claim 1—and that no finding of induced infringement can stand on that ground—we will have forced the parties and the trial court to go through a new trial when none was necessary.

I do not purport to prejudge Cisco's arguments; Cisco may be wrong on both points.[3] I urge us, however, to judge them one way or another.

---

[3] While I, of course, have formulated positions on these questions, because the majority insists that the next panel of this court to visit this case be relegated to resolving them, I will not say anything which might impact its independent ability to do so.

We do no one any favors by kicking these potentially dispositive cans down the road and may well be requiring undue expense and wasting scarce judicial resources in the process. I believe our appellate function requires that we avoid such inefficiency whenever possible. For these reasons, I dissent from the majority's refusal to resolve these properly preserved issues on appeal.

II

I turn next to the majority's conclusion that the partial new trial order entered by the district court in this case—one which we now effectively reinstate—did not violate the Seventh Amendment. I do not agree. Accepting the proposition, as I have, that the district court acted within its discretion to find a new trial warranted in this case, I believe that nothing other than a full retrial on all issues can be justified under the law.[4]

While partial retrials are permissible in appropriate circumstances, the Supreme Court has set forth a strict standard for determining when such circumstances exist. In *Gasoline Prods. Co. v. Champlin Refining Co.*, 283 U.S. 494, 500 (1931), the Supreme Court explained that a court's authority to order a new trial is constrained by the Seventh Amendment such that "a partial new trial . . . may not properly be resorted to unless it clearly appears

---

[4] Because it appears that Commil has abandoned its direct infringement claims against Cisco, the other issues I believe need to be tried in conjunction with Commil's induced infringement claim include only those relating to the alleged invalidity of the claims of the '395 patent—indefiniteness, lack of enablement, and lack of adequate written description.

that the issue to be retried is so distinct and separable from the others that a trial of it alone may be had without injustice." Applying that standard to the case before it, the Supreme Court concluded that a partial retrial on damages alone would violate the Seventh Amendment because the facts and issues relating to the merits of the contract action were not sufficiently separable from those relating to damages. *Gasoline Prods.*, 283 U.S. at 500; *see also Witco Chemical Corp. v. Peachtree Doors, Inc.*, 787 F.2d 1545, 1549 (Fed. Cir. 1986) (quoting standard from *Gasoline Products* and finding that "it is inappropriate . . .to have one jury return a verdict on the validity, enforceability, and contract questions while leaving the infringement questions to a second jury.").

The Fifth Circuit—the regional circuit from which this case arises and whose law we are to apply to this non-patent basic right—repeatedly has cautioned against resort to partial retrials, citing to the guidance from *Gasoline Products*. *See, e.g., Nissho-Iwai Co. v. Occidental Crude Sales, Inc.*, 729 F.2d 1530, 1539 (5th Cir.1984) (approving refusal to order partial retrial of fraud claim alone because "the fraud claim arose out of the acts surrounding the breach of contract [claim]" and understanding of one required understanding of the other); *Davis v. Safeway Stores*, 532 F.2d 489, 491 n. 3 (5th Cir. 1976) (noting that granting of a partial new trial over particular issues requires those issues to be clearly separable from other issues in the case); *Vidrine v. Kansas City S. Ry. Co.*, 466 F.2d 1217, 1221 (5th Cir. 1972) (observing that a partial retrial is only appropriate where issues are "so distinct and separable" that there will be "no injustice or

prejudice" to either party); *Williams v. Slade*, 431 F.2d 605, 609–10 (5th Cir. 1970) (noting that if a verdict is a "product of passion or prejudice" a new trial on all issues must be ordered).

The requirement that issues in multiple trials be separable and distinct protects parties' rights under the Seventh Amendment by guarding against circumstances which threaten those rights. *See, e.g.*, *Pryer v. C.O. 3 Slavic*, 251 F.3d 448, 454-58 (3d Cir. 2001) (collecting cases disapproving of partial retrials and outlining factors counseling against such partial retrials). One such circumstance is where the issues relating to the separated claims overlap, causing the potential for "confusion" or "uncertainty" when one issue is submitted to the jury without the other. *Id.*; *See also, Nissho-Iwai Co.*, 729 F.2d at 1539 (where claims arise from same transactional facts, jury cannot understand one fully without understanding the other and having both presented jointly); *FIGA v. R.V.M.P. Corp.*, 874 F.2d 1528, 1534 (11th Cir.1989) (partial retrial just on damages is not appropriate where damages evidence was not fully separable from evidence of insured's alleged intent to cause fire); *United States ex rel. Miller v. Bill Harbert Int'l Constr., Inc.*, 865 F. Supp. 2d 1, 10 (D.D.C. 2011) (partial retrial inappropriate because jury needs thorough knowledge of underlying conspiracy in order to understand and assess whether particular defendants joined that conspiracy).

Partial retrials must also be avoided where it is possible that the very error that is deemed to warrant a new trial may have impacted the jury's determination of other issues. *Pryer*, 251 F.3d at 455

(3d Cir. 2001) (partial retrial is inappropriate whenever it is not clear that the error that crept into one element of the verdict "did not in any way affect the determination of any other") (additional citations omitted). This is especially so where a retrial is prompted by a finding that comments of counsel may have unduly "inflamed" the jury because such a finding "implies that the jury made its decision on an improper basis." *United States ex rel. Miller*, 865 F. Supp. 2d at 10 (D.D.C. 2011) (finding partial retrial inappropriate where new trial was based on prosecutor's improper comments on one issue because that error "might well have affected the jury's determination of other issues"). And, partial retrials should be avoided whenever circumstances indicate "there is reason to think that the verdict may represent a compromise among jurors with different views on whether defendant was liable." *Pryer*, 251 F.3d at 455 (additional citations omitted); *See also Stanton v. Astra Pharm. Products, Inc.*, 718 F.2d 553, 576 (3d Cir. Pa. 1983) (citing *Vizzini v. Ford Motor Co.* 569 F.2d 754, 759–60 (3d Cir. Pa. 1977)) (finding that suggestion of possible compromise verdict was such that permitting retrial of damages alone, absent reconsideration of liability issues was inappropriate, noting "[i]s difficult to say that 'allowing a second jury to determine the issue of damages in isolation from the whole of the circumstances surrounding the case was not an injustice. . .'"). All of these circumstances are presented here.

As the majority explained, the trial court ordered are trial based on statements by Cisco's local counsel which the trial court believed were so insidious as to call into question the integrity of the

jury's verdict. *See Commil USA, LLC v. Cisco Sys., Inc.*, No. 2:07-cv-341 slip. op. at 3–4 (E.D. Tex. Dec. 29, 2010). If the trial court believed the verdict truly was compromised, how could he—and how can we—assume the misconduct infected only a *portion* of their deliberations? Indeed, it could be that the jury was so incensed by its counsel's conduct that they held it against Cisco by refusing to invalidate Commil's patent, despite a contrary view of the evidence.

Once the partial retrial began, moreover, the trial court's evidentiary rulings themselves reflect the awkward posture in which he had placed the case. Most pointedly, as the majority discusses, the trial court excluded—incorrectly—evidence of Cisco's alleged good faith belief in the invalidity of the claims of the '395 patent. What the majority fails to mention, however, is that Commil itself expressly argued that it would unduly confuse the jury to admit such evidence *without also submitting the validity determination to it* to decide. *See Commil USA, LLC v. Cisco Sys., Inc.*, No. 2:07-cv-341, Doc. No. 398 at 4–5 (April 1, 2011). And, it was in response to this argument that the evidence was excluded. Where the court closest to these matters saw the potential for confusion because of the interwoven nature of the invalidity claims and Cisco's good faith defense to induced infringement, how can we ignore that potential when we now order the excluded evidence to be admitted? I do not believe we can. I do not believe we can differentiate the circumstances here from the overlapping nature of the issues in *Gasoline Products* and the host of cases cited above finding a partial retrial improper based on the principles described therein.

The practical implications of the judgment we render today highlight the Seventh Amendment problems we create thereby. We unanimously agree not only that it was error to exclude proffered evidence of Cisco's good faith belief in the invalidity of the claims of the '395 patent, but that the error was not harmless. In other words, we find that Cisco was denied the right to a fair trial on Commil's induced infringement claim because it was denied the opportunity to pursue a valid defense. In the same breath, however, the majority concludes it is appropriate to retry the case in a posture that would dilute that defense.

When this case returns to Texas for a third trial, the trial court will need to craft instructions that tell the jury that, while Cisco *claims* it had a good faith belief in the invalidity of the claims of the '395 patent, *Cisco was wrong*. The jury will need to be told that it is not permitted to conclude it agrees with Cisco's belief. The jury will, thus, begin its deliberations already suspect about Cisco's beliefs and the good faith nature of the same. It is precisely these circumstances against which the Supreme Court insists we guard. Importantly, given the significance of the Seventh Amendment guarantees it is our job to protect, we are not to ask whether it is *conceivable* that a jury could fairly assess Cisco's case in these circumstances; we are to assume that, where it is not *clear* that "the issue to be retried is so distinct and separable from the others," it cannot. *See, e.g., Gasoline Prods. Co.*, 283 U.S. at 500; *Witco Chemical Corp.*, 787 F.2d at 1549

Finally, I do not believe we can discount the possibility that the first verdict may have

represented a series of compromises by the jury. How can we know that the jury did not agree not to invalidate the claims of the '395 patent only because it found no induced infringement and understood that its direct infringement finding carried with it a smaller damages award? We cannot.

I do not contend that issues in patent cases can never be tried to separate juries, particularly after an appeal reveals that only one issue was adjudicated erroneously. Whether and when a new trial on all issues is required must be determined "only after considering the totality of the circumstances and by answering: 'How may the ends of justice be served?'" *Witco Chemical Corp.*, 787 F.2d at 1549 (citations omitted). Here, *all* circumstances indicate that a partial retrial of Commil's induced infringement claim without retrial of the validity issues is not appropriate.[5]

While Cisco's counsel's conduct was reprehensible and warranted curative action, action which compromises Cisco's Seventh Amendment right to a jury goes too far. I believe the trial court abused its discretion by only ordering a partial retrial of the claims asserted in this case and that we perpetuate that error by ordering yet another partial retrial.

---

[5] The cases upon which the majority relies do not really support its contrary conclusion. Those cases either fail to address the constitutional issue at all or do so in fundamentally different circumstances. I am not persuaded they either control or even counsel in in favor of the conclusion the majority reaches.

[ENTERED: December 29, 2010]

IN THE UNITED STATES DISTRICT COURT FOR THE EASTERN DISTRICT OF TEXAS MARSHALL DIVISION

COMMIL USA, LLC	§	
	§	
vs.	§	CASE NO. 2:07-CV-341
	§	
CISCO SYSTEMS, INC.	§	

MEMORANDUM OPINION AND ORDER

Pending before the court is the plaintiff Commil USA, LLC's ("Commil") motion for new trial on issues of indirect infringement and damages (Dkt. No. 353). Commil argues that, during the trial of this case, the defendant Cisco System, Inc.'s ("Cisco") counsel made various comments that served to engender prejudice against Commil's owner and the inventors of the patent-in-suit. Commil contends that these statements prejudiced its right to a fair trial. As such, Commil requests that the court grant a new trial on the issues of indirect infringement and damages. After carefully considering the parties' arguments, the court is of the opinion that Cisco's counsel's statements regarding religious preferences were improper, and as such, the court GRANTS Commil's motion for new trial.

I. Background

On May 11, 2010, a jury trial commenced in this case. On May 17, 2010, the case was submitted to the jury, and the jury returned a verdict finding

that U.S. Patent No. 6,430,395 ("'395 Patent") was valid and that Cisco had directly infringed the patent. The jury, however, did not find that Cisco had induced infringement of the '395 Patent. The jury awarded Commil $3,726,207 to compensate for Cisco's direct infringement. On June 21, 2010, Commil filed this motion for new trial on the issues of indirect infringement and damages.

II. Legal Standard

Pursuant to Federal Rule of Civil Procedure 59(a) the court "may, on motion, grant a new trial on all or some of the issues–and to any party . . . after a jury trial for any reason for which a new trial has heretofore been granted in an action at law in federal court . . ." FED. R. CIV. P. 59(a). The regional circuit law applies to motions for new trials. *See Riverwood Intern. Court v. R.A. Jones & Co., Inc.*, 324 F.3d 1346, 1352 (Fed. Cir. 2003). In the Fifth Circuit, "[t]he decision to grant or deny a motion for a new trial is within the discretion of the trial court and will not be disturbed absent an abuse of discretion or a misapprehension of the law." *Prytania Park Hotel, Ltd. v. General Star Indem. Co.*, 179 F.3d 169, 173 (5th Cir. 1999).

The Fifth Circuit has explained that "awards influenced by passion and prejudice are the antithesis of a fair trial." *Whitehead v. Food Max of Miss., Inc.*, 163 F.3d 265, 276 (5th Cir. 1998). In *Hall v. Freese*, the Fifth Circuit concluded that irrelevant attorney argument meant to appeal to the jury's biases and prejudices about a particular person's status justified a new trial. *Hall v. Freese*, 735 F.2d 956 (5th Cir. 1984). The court, however, warned that

when no objection is raised during trial, improper attorney argument may be the basis for a new trial only 'where the interest of substantial justice is at stake.'" *Id.* at 961 (quoting *Edwards v. Sears, Roebuck & Co.*, 512 F.2d 276, 286 (5th Cir. 1975)). In determining whether to grant a new trial based on improper attorney argument, the court must consider "the comments of counsel, the counsel's trial tactics as a whole, the evidence presented, and the ultimate verdict." *Alaniz v. Zamora-Quezada*, 591 F.3d 761, 776 (5th Cir. 2009) (quoting *Mills v. Beech Aircraft Corp.*, 886 F.2d 758, 765 (5th Cir. 1989)). The court need not find that each individual statement was so improper as to justify a new trial, but only that the totality of the remarks prejudiced the jury's findings. *Whitehead*, 163 F.3d at 278.

III. Analysis

Commil bases its motion for new trial on, among other things, inappropriate comments made by Cisco's counsel during trial. Jonathan David, one of the owners of Commil and its client representative, is Jewish. While cross-examining Mr. David, Cisco's counsel inquired whether Mr. David had met with Nitzan Arazi, one of the inventors on the '395 Patent, while in Marshall, Texas for the trial. Mr. David responded affirmatively, explaining that they had had dinner at a barbeque restaurant, to which Cisco's counsel inexplicably responded: "I bet not pork." Trial Transcript, May 12, 2010 (morning session), at 146:23. When the court asked Cisco's counsel to explain the relevance of his comment, Cisco's counsel admitted that it had no relevance to any issue in the case. *Id.* at 158:2-6.

Thereafter, Cisco's counsel apologized to the witness, and the court gave a curative instruction.

Although Cisco's counsel acknowledged that his pork comment was inappropriate, he nevertheless proceeded to make further remarks regarding religious practices. Cisco's counsel's closing argument began:

> Ladies and Gentlemen of the Jury, you are, in this case, truth-seekers. You are charged with the most important job in this courtroom, and that's determining the truth
>
> . . .
>
> And when you figure out what the truth is, you'll know how to answer that verdict form. You remember the most important trial in history, which we all read about as kids, in the Bible had that very question from the judge. What is truth?

Trial Transcript, May 17, 2010 (afternoon session), at p. 16:1-16. Cisco's counsel was referring to the trial of Jesus, which was presided over by Pontius Pilate. This argument, when read in context with Cisco's counsel's comment regarding Mr. David and Mr. Arazi's religious heritage, impliedly aligns Cisco's counsel's religious preference with that of the jurors and employs an "us v. them" mentality – i.e., "we are Christian and they are Jewish."

When these comments are considered as a whole, the court concludes that the comments prejudiced the jury's findings regarding indirect infringement and damages. These comments had a tendency to appeal to the prejudices of the jurors. *See Hall*, 735 F.2d at 960-61. As such, even though no objections were made to these remarks, the court is convinced that the jury's verdict is inconsistent with substantial justice, and Commil's motion for new trial is GRANTED.

IV. Conclusion

For the forgoing reasons, the court GRANTS Commil's motion for new trial on the issues of indirect infringement and damages (Dkt. No. 353). Jury selection for the new trial on indirect infringement and damages is set for April 4, 2011 at 9:00 a.m., and the pre-trial conference is set for March 24, 2011 at 9:30 a.m.

SIGNED this 29th day of December, 2010.

/s/

CHARLES EVERINGHAM IV
UNITED STATES MAGISTRATE JUDGE

[ENTERED April 1, 2011]

IN THE UNITED STATES DISTRICT COURT FOR THE EASTERN DISTRICT OF TEXAS MARSHALL DIVISION

COMMIL USA, LLC	§	
	§	
vs.	§	CASE NO. 2:07-CV-341
	§	
CISCO SYSTEMS, INC.	§	

ORDER

Pending before the court are the parties' motions in limine (Dkt. Nos. 383 and 384) and Commil's motion for leave to exceed the fifteen page limit imposed on its motion in limine (Dkt. No. 385). The court GRANTS Commil's motion to exceed the fifteen page limit on its motion in limine. The court's rulings with regard to the parties' various motions in limine are detailed below.

Plaintiff's Motions in Limine:

Motions Number 1 – 3: Granted-in-Part and Denied-in-Part. The parties are not permitted to argue that the patent-in-suit is limited to telephone calls, Telephony, or Bluetooth. The parties' damages experts, however, can opine as to the primary application of the patent-in-suit.

Motion Number 4: Granted-in-Part and Denied-in-Part. The motion is granted to the

extent that Cisco may not argue that it does not directly infringe the patent-in-suit. Cisco may, however, present evidence that it had a good faith belief that it did not infringe the patent-in-suit. Furthermore, Cisco may adduce evidence and argue that its consumers do not directly infringe the patent-in-suit. Finally, Cisco may argue that it had a good-faith belief that its customers did not directly infringe the patent-in-suit and that it did not induce its customers to engage in any such infringement.

- *Motion Number 5*: Denied.

Motion Number 6: Granted. Cisco may not adduce any evidence that it had a good faith belief that the patent was invalid.

Motion Number 7: Carried.

Motion Number 8: Carried.

- *Motion Number 9*: Denied.

- *Motion Number 10*: Granted.

Motion Number 11: Granted.

Motion Number 12: Granted.

Motion Number 13: Granted-in-Part and Denied-in-Part. Granted to the extent that Cisco may not refer to Commil as a "patent troll."

Motion Number 14: Denied.

Motion Number 15: Granted.

Motion Number 16: Denied.

Motion Number 17: Granted.

Defendant's Motions in Limine:

Motion Number 1: Carried.

Motion Number 2: Granted.

Motion Number 3: Granted-in-Part and Denied-in-Part. The motion is granted with respect to subparts "b" and "c." The motion, however, is denied with respect to subpart "a" dealing with the display of the patent-in-suit.

Motion Number 4: Denied.

Motion Number 5: Denied.

Motion Number 6: Carried.

Motion Number 7: Granted.

Motion Number 8: Denied.

SIGNED this 1st day of April, 2011.

/s/

CHARLES EVERINGHAM IV
UNITED STATES MAGISTRATE JUDGE

IN THE UNITED STATES DISTRICT COURT
FOR THE EASTERN DISTRICT OF TEXAS
MARSHALL DIVISION

COMMIL USA, LLC	§	
	§	
vs.	§	CASE NO. 2:07-CV-341
	§	
CISCO SYSTEMS, INC.	§	

AMENDED FINAL JUDGMENT

On May 11, 2010, a jury trial commenced in this case. On May 17, 2010, the case was submitted to the jury, and the jury returned a verdict finding that defendant Cisco Systems, Inc. ("Cisco") had directly infringed claims 1, 4, and 6 of U.S. Patent No. 6,430,395 ("'395 Patent") (*See* Dkt. No. 335). The jury, however, did not find that Cisco had induced infringement of the '395 Patent. Furthermore, the jury failed to find the '395 Patent invalid. The jury awarded plaintiff Commil USA, LLC ("Commil") $3,726,207 to compensate for Cisco's direct infringement.

Subsequent thereto, Commil filed a motion for new trial on the issues of induced infringement and damages and the court granted Commil's motion (Dkt. No. 361). The new trial began on April 5, 2011. On April 8, 2011, the case was submitted to the jury, and the jury returned a verdict finding that Cisco had induced infringement of claims 1, 4, and 6 of the '395 Patent (Dkt. No. 422). The jury awarded Commil $63,791,153 to compensate for Cisco's induced infringement.

Accordingly, it is ORDERED, ADJUDGED, AND DECREED that Cisco directly infringed and induced infringement of claims 1, 4, and 6 of the '395 Patent and that those claims are valid. It is further ORDERED, ADJUDGED, AND DECREED that Commil recover from Cisco the amount of Sixty-three Million Seven Hundred Ninety-one Thousand One Hundred Fifty Three Dollars ($63,791,153) in actual damages.

It is further ORDERED, ADJUDGED, AND DECREED that Commil recover from Cisco prejudgment interest in the amount of Ten Million Two Hundred Ninety-five Thousand Three Hundred Eighty-six Dollars and Thirty-two Cents ($10,295,386.32).

It is further ORDERED, ADJUDGED, AND DECREED that Commil recover from Cisco post-judgment interest at the lawful federal rate.

It is further ORDERED, ADJUDGED, AND DECREED that Commil recover from Cisco the amount of Seventeen Thousand Seven Hundred Thirty Seven Dollars and Ninety Eight Cents ($17,737.98) as costs.

This is a FINAL JUDGMENT. All other pending motions are DENIED.

SIGNED this 28th day of September, 2011.

/s/
CHARLES EVERINGHAM IV
UNITED STATES MAGISTRATE JUDGE

CORRECTED 10.25.2013

United States Court of Appeals for the Federal Circuit

COMMIL USA, LLC,
Plaintiff-Appellee,

v.

CISCO SYSTEMS, INC.,
Defendant-Appellant.

2012-1042

Appeal from the United States District Court for the Eastern District of Texas in No. 07-CV-0341, Magistrate Judge Charles Everingham.

ON PETITION FOR REHEARING EN BANC

MARK S. WERBNER, Syles Werbner, P.C., of Dallas, Texas, filed a petition for rehearing en banc for plaintiff-appellee. With him on the petition were RICHARD A. SAYLES and MARK D. STRACHAN. Of counsel on the brief were LESLIE V. PAYNE, NATHAN J. DAVIS and MIRANDA Y. JONES, Heim, Payne & Chorush, of Houston, Texas.

WILLIAM F. LEE, Wilmer Cutler Pickering Hale and Dorr LLP, of Boston, Massachusetts, filed a response to the petition for defendant-appellant.

With him on the brief were MARK C. FLEMING, JONATHAN W. ANDRON and FELICIA H. ELLSWORTH; and WILLIAM G. MCELWAIN, of Washington, DC. Of counsel on the response were HENRY B. GUTMAN, Simpson Thacher & Bartlett LLP, of New York, New York; and JEFFREY E. OSTROW, HARRISON J. FRAHN, IV, PATRICK E. KING and JONATHAN SANDERS, of Palo Alto, California.

Before RADER, *Chief Judge*, NEWMAN, LOURIE, DYK, PROST, MOORE, O'MALLEY, REYNA, WALLACH, TARANTO, and CHEN, *Circuit Judges*.[1]

REYNA, *Circuit Judge*, with whom RADER, *Chief Judge*, NEWMAN, LOURIE, and, WALLACH *Circuit Judges*, join, dissents from the denial of the petition for rehearing en banc.

NEWMAN, *Circuit Judge*, with whom RADER, *Chief Judge*, REYNA and WALLACH, *Circuit Judges*, join, dissenting from the denial of the petition for rehearing en banc.

PER CURIAM.

ORDER

A petition for rehearing en banc was filed by plaintiff-appellee, and a response thereto was invited by the court and filed by defendant-appellant. The petition for rehearing en banc was first referred as a petition for rehearing to the panel that heard the appeal, and thereafter the petition for rehearing en

---

[1] Circuit Judge Hughes did not participate.

banc and response were referred to the circuit judges who are authorized to request a poll of whether to rehear the appeal en banc. A poll was requested, taken, and failed.

Upon consideration thereof,

IT IS ORDERED THAT:

(1) The petition of plaintiff-appellee for panel rehearing is denied.

(2) The petition of plaintiff-appellee for rehearing en banc is denied.

(3) The mandate of the court will issue on November 1, 2013.

FOR THE COURT

October 25, 2013
Date

/s/ Daniel E. O'Toole
Daniel E. O'Toole
Clerk

United States Court of Appeals for the Federal Circuit

COMMIL USA, LLC,
Plaintiff-Appellee,

v.

CISCO SYSTEMS, INC.,
Defendant-Appellant.

2012-1042

Appeal from the United States District Court for the Eastern District of Texas in No. 07-CV-0341, Magistrate Judge Charles Everingham.

REYNA, *Circuit Judge*, with whom RADER, *Chief Judge*, and NEWMAN, LOURIE and WALLACH, *Circuit Judges*, join, dissenting from the denial of the petition for rehearing en banc.

The *Commil* majority established a substantive, precedential change in patent law by expressly "hold[ing] that evidence of an accused inducer's good-faith belief of invalidity may negate the requisite intent for induced infringement." *Commil USA, LLC v. Cisco Sys., Inc.*, 720 F.3d 1361, 1368 (Fed. Cir. 2013). Its analysis may be summed by its expressed view that because "[i]t is axiomatic that one cannot infringe an invalid patent" there is "no principled distinction between a good-faith belief of invalidity and a good-faith belief of non-

infringement for the purpose of whether a defendant possessed the specific intent to induce infringement of a patent." *Id.*

By holding that a good faith belief in the invalidity of a patent may negate the requisite intent for induced infringement, the two-judge *Commil* majority created a new noninfringement defense to induced infringement that is premised on the accused infringer's belief of invalidity. As Judge Newman aptly points out in her dissent, "This absolution applies, according to the panel majority, altnough the patent receives the presumption of validity, and validity is sustained in litigations." (Newman, J., dissenting from the denial of the petition for rehearing en banc, at 1.)

Because I believe the *Commil* majority opinion is without foundation in law and precedent, and for the reasons stated below, I respectfully dissent from the vote taken of the court to not conduct an en banc review of the majority opinion in *Commil*.

I.

My primary dispute with the majority holding is that it wrongly rearranges the legal foundation that underpins the enforceability of valid patents and the finding of liability for infringement.

First, the induced infringement statute states simply that "[w]hoever actively induces infringement of a patent shall be liable as an infringer." 35 U.S.C. § 271(b). The law recognizes that the statute's use of the words "actively induces" imparts an intent

requirement into the statute. As stated by the Supreme Court, "[t]he addition of the adverb 'actively' suggests that the inducement must involve the taking of affirmative steps to bring about the desired result." *Global-Tech. Appliances, Inc. v. SEB S.A.*, 131 S. Ct. 2060, 2065 (2011). In § 271(b), the "desired result" that a party accused of inducement must be affirmatively seeking to bring about is defined in the statute as simply "infringement."

The term "infringement" is used consistently throughout § 271 to mean that all of the limitations of a patent claim are satisfied by an accused product or accused conduct. *See, e.g.*, *TecSec, Inc. v. Int'l Bus. Mach. Corp.*, --- F.3d ----, No. 2012-1415, 2013 WL 5452049, at *13 (Fed. Cir. 2013) (citations omitted) ("An act of infringement occurs when all the elements of a claimed product or method are met by the accused device or process."). In *Global-Tech*, the Court concluded that in order to satisfy the intent element of induced infringement under § 271(b), an accused infringer must possess "knowledge that the induced acts constitute patent infringement," *Global-Tech.*, 131 S. Ct. at 2068, but it did not alter the fundamental meaning of "infringement." Our recent en banc decision in *Akamai* further confirms that "infringement" in the context of "induced infringement" is resolved solely with reference to the limitations of a patent claim. *See Akamai Techs., Inc. v. Limelight Networks, Inc.*, 692 F.3d 1301, 1306 (Fed. Cir. 2012) ("we hold that all steps of a claimed method must be performed in order to find induced infringement").

The legislative history explains that the language of § 271(b) "recites in broad terms that one

who aids and abets an infringement is likewise an infringer." H.R. Rep. No. 82–1923, at 9. Neither the statute nor its legislative history provides that one who knowingly and successfully induces another to engage in conduct that infringes a valid patent can escape liability by showing it held a good faith belief that the patent was invalid. Indeed, the rationale for imposing liability on the party who is inducing infringement is simple: one who causes, urges, encourages, or aids in an infringement is just as, if not more, culpable for the invasion of the patentee's exclusive rights than those who actually perform the acts of infringement. *See generally Akamai*, 692 F.3d at 1309-13. Yet, under the majority's holding, an accused inducer that is deriving a benefit by knowingly and intentionally inducing an unsuspecting third party to directly infringe patent rights can itself escape liability based on a belief that the patent is invalid while the unsuspecting third party cannot. This situation is directly contrary to the plain language and purpose of the induced infringement statute.

II.

Second, infringement and invalidity are separate issues under the patent code and our precedent. This is not controversial. We have "long recognized that patent infringement and invalidity are separate and distinct issues." *Pandrol USA, LP v. Airboss Ry. Prods., Inc.*, 320 F.3d 1354, 1365 (Fed. Cir. 2003). This distinction is further reflected in the organization of the patent code, which places the issues of infringement and invalidity in separate "Parts." *Compare* 35 U.S.C. §§ 251-329 (Part III:"Patents and Protection of Patent Rights"), *with*

35 U.S.C. §§ 100-212 (Part II: "Patentability of Inventions and Grant of Patents").

Given this, there is no reasonable basis to impute questions of invalidity or liability into § 271(b) through the term "infringement." If a patent is found invalid, that is a complete defense to liability because it negates the patent's existence and thereby extinguishes any exclusionary rights. Conversely, if there is a patent—i.e., it is not invalid—then the question is merely whether there has been conduct that actively induces acts of infringement *per se*. This too is not controversial under our precedent because we have long recognized that "[t]hough an invalid claim cannot give rise to *liability* for infringement, whether it is infringed is an entirely separate question capable of determination without regard to its validity." *Medtronic, Inc. v. Cardiac Pacemakers, Inc.*, 721 F.2d 1563, 1583 (Fed. Cir. 1983) (emphasis added).

Despite that "Supreme Court precedent and our cases make clear that patent infringement and patent validity are treated as separate issues," *Pandrol*, 320 F.3d at 1365, the *Commil* majority nevertheless imputes questions of invalidity into induced infringement under the guise of "intent." It attempts to justify this departure from controlling precedent on the premise that "[i]t is axiomatic that one cannot infringe an invalid patent." *Commil*, 720 F.3d at 1368. But this "axiom" is materially wrong in the present context and does not withstand scrutiny in view of controlling precedent. *See, e.g.*, *Medtronic*, 721 F.2d at 1583. A more accurate statement of our precedent is that *liability* for patent infringement depends on an infringed claim being valid and

enforceable; that is, one cannot *be liable for infringement* of an invalid patent.

III.

Third, the *Commil* majority holding wrongly conflates the defense of noninfringement with the defense of invalidity. "An important limitation on the scope of induced infringement is that inducement gives rise to liability only if the inducement leads to actual infringement." *Akamai*, 692 F.3d at 1308. The *Commil* majority expands the inquiry regarding noninfringement to include invalidity on grounds that it "see[s] no principled distinction between a good-faith belief of invalidity and a good-faith belief of non-infringement for the purpose of whether a defendant possessed the specific intent to induce infringement of a patent." *Commil*, 720 F.3d at 1368. This statement ignores the statutorily-mandated presumption of validity, *see* § 282(a), in that it sets up all patents as invalid, at least in the mind of the inducer. In doing so, the majority strikes at the very heart of the presumption of validity by eroding patent rights that have been duly granted by the PTO based solely on an erroneous—albeit good faith—belief that the PTO erred in granting the patent. This has profound and negative implications that are not contemplated by the patent statute.

Conflating infringement and invalidity also unnecessarily complicates the induced infringement inquiry. In this regard, infringement and non-infringement are opposite sides of the same coin whereas infringement and invalidity are altogether entirely different coins. The intent element of § 271(b) is met when the accused infringer acts with

actual knowledge of the patent claim and was "actively inducing" conduct that it knew to be within the scope of an asserted claim. *See Akamai*, 692 F.3d at 1308. Whether the accused infringer held a good faith belief that it was inducing conduct that fell outside the scope of the claims is directly relevant to this intent inquiry. But whether the accused infringer held a good faith belief in invalidity—e.g., an erroneous belief regarding obviousness—is wholly unrelated to the accused infringer's conduct vis-à-vis the limitations of a presumptively valid patent claim. These fundamental differences between the defenses provide a reasoned and legally sound basis for differentiating between a good faith belief of non-infringement and a good faith belief in invalidity in the context of induced infringement.

* * *

There exists another axiom of more universal application that is appropriate here: "if it's not broken, don't fix it." The *Commil* majority has strained to fix current law without ever showing exactly what is broken, and its fix has been to create an entirely new infringement defense, a new rule of law.

In addition, the majority does not instruct the lower courts how they are to apply the fix. Is the new rule a question of fact? Is it a question of law? Is it a question of law with underlying factual basis? Should the question of good faith belief of invalidity be tried along with the invalidity issues, or perhaps before any other issues are heard given its determinative effect on the outcome of the case?

A grave concern that I have with the new rule is that it fundamentally changes the operating landscape, much like waking up and unexpectedly finding that the sky is now green. The new rule is a powerful tool in patent litigation in that it establishes an escape hatch from liability of infringement that is not now in the statute. This has a compromising effect on the only axiom that we should all observe, and that is issued patents are presumed valid.

United States Court of Appeals for the Federal Circuit

COMMIL USA, LLC,
Plaintiff-Appellee,

v.

CISCO SYSTEMS, INC.,
Defendant-Appellant.

2012-1042

Appeal from the United States District Court for the Eastern District of Texas in No. 07-CV-0341, Magistrate Judge Charles Everingham.

NEWMAN, *Circuit Judge*, with whom RADER, *Chief Judge*, REYNA and Wallach, *Circuit Judges*, join, dissenting from the denial of the petition for rehearing en banc.

By decision issued June 25, 2013, a split panel announced a change in the law of induced infringement, creating a new rule of law whereby an adjudged inducer of infringement is absolved of liability for infringement if the infringer had a "good faith belief" that the patent it infringed was invalid. This absolution applies, according to the panel majority, although the patent has a statutory presumption of validity, and validity of the patent is litigated and sustained. I explained, in my dissenting opinion, why this position is contrary to

law and precedent. And I took some comfort from the protocol that a panel cannot change the law established by decisions of the court; only the en banc court can do so.

Indeed, it is not "axiomatic that one cannot infringe an invalid patent" as the majority opinion states. Precedent is contrary. *See Medtronic, Inc. v. Cardiac Pacemakers, Inc.*, 721 F.2d 1563, 1583 (Fed. Cir. 1983) ("Though an invalid claim cannot give rise to liability for infringement, whether it is infringed is an entirely separate question capable of determination without regard to its validity."); *Spectra-Physics, Inc. v. Coherent, Inc.*, 827 F. 2d 1524, 1535 (Fed. Cir. 1987) ("The single instruction to the jury that invalid claims cannot be infringed (a nonsense statement), one of many on supposed general principles of patent law, does not operate to convert the interrogatories on infringement into general verdicts which subsumed all of Spectra's invalidity defenses, including best mode."). If the court now wishes to change this law, it must be done en banc. It disserves the public, and diminishes the court, to continue to issue conflicting statements.

Now, however, the full court's majority refusal of en banc review of the panel's ruling adds uncertainty to the law and its application. Investors, competitors, and trial courts cannot be confident as to the law that will be applied by the Federal Circuit. Such destabilization is a disservice not only to patentees but also to the public that benefits from technological advance. A court's creative judicial rulings are readily clarified; our refusal to do so in patent cases not only spawns avoidable litigation but also is a disincentive to industrial innovation.

To compound the inequity, here the panel majority, on remanding for retrial of infringement with the defense that the infringer believed the patent to be invalid, nonetheless does not permit retrial of validity. In the posture of the remand, the prior jury verdict of validity is the law-of-the-case. However, the issues of infringement and validity are interwoven in the new defense of subjective "belief", and the restricted remand procedure can impart "confusion and uncertainty, which would amount to a denial of a fair trial." *Anderson v. Siemens Corp.*, 335 F.3d 466, 475–76 (5th Cir. 2003). It is only fair that the new jury, at a new trial for determination of this "belief", receives full evidence of the premises. At a minimum, the panel's instructions for limited retrial should receive en banc review.

Thus I must, respectfully, dissent from denial of the request for rehearing en banc.

35 USCS § 271

Current through PL 113-72, with a gap of 113-66, approved 12/26/2013

United States Code Service - Titles 1 through 51 > TITLE 35. > PART III. > CHAPTER 28.

Notice

Part 1 of 2. You are viewing a very large document that has been divided into parts.

§ 271. Infringement of patent

(a) Except as otherwise provided in this *title [35 USCS §§ 1* et seq.], whoever without authority makes, uses, offers to sell, or sells any patented invention, within the United States or imports into the United States any patented invention during the term of the patent therefor, infringes the patent.

(b) Whoever actively induces infringement of a patent shall be liable as an infringer.

(c) Whoever offers to sell or sells within the United States or imports into the United States a component of a patented machine, manufacture, combination or composition, or a material or apparatus for use in practicing a patented process, constituting a material part of the invention, knowing the same to be especially made or especially adapted for use in an infringement of such patent, and not a staple article or commodity of commerce

suitable for substantial noninfringing use, shall be liable as a contributory infringer.

(d) No patent owner otherwise entitled to relief for infringement or contributory infringement of a patent shall be denied relief or deemed guilty of misuse or illegal extension of the patent right by reason of his having done one or more of the following: (1) derived revenue from acts which if performed by another without his consent would constitute contributory infringement of the patent; (2) licensed or authorized another to perform acts which if performed without his consent would constitute contributory infringement of the patent; (3) sought to enforce his patent rights against infringement or contributory infringement; (4) refused to license or use any rights to the patent; or (5) conditioned the license of any rights to the patent or the sale of the patented product on the acquisition of a license to rights in another patent or purchase of a separate product, unless, in view of the circumstances, the patent owner has market power in the relevant market for the patent or patented product on which the license or sale is conditioned.

(e)

(1) It shall not be an act of infringement to make, use, offer to sell, or sell within the United States or import into the United States a patented invention (other than a new animal drug or veterinary biological product (as those terms are used in the Federal Food, Drug, and Cosmetic Act and the Act of March 4, 1913) which is primarily manufactured

using recombinant DNA, recombinant RNA, hybridoma technology, or other processes involving site specific genetic manipulation techniques) solely for uses reasonably related to the development and submission of information under a Federal law which regulates the manufacture, use, or sale of drugs or veterinary biological products.

(2) It shall be an act of infringement to submit–

> (A) an application under section 505(j) of the Federal Food, Drug, and Cosmetic Act [*21 USCS § 355(j)*] or described in section 505(b)(2) of such Act [*21 USCS § 355(b)(2)*] for a drug claimed in a patent or the use of which is claimed in a patent,
>
> (B) an application under section 512 of such Act [*21 USCS § 360b*] or under the Act of March 4, 1913 *(21 U.S.C. 151-*158) for a drug or veterinary biological product which is not primarily manufactured using recombinant DNA, recombinant RNA, hybridoma technology, or other processes involving site specific genetic manipulation techniques and which is claimed in a patent or the use of which is claimed in a patent, or
>
> (C) (i) with respect to a patent that is identified in the list of patents

described in section 351(l)(3) of the Public Health Service Act [*42 USCS § 262(l)(3)*] (including as provided under section 351(l)(7) of such Act [*42 USCS § 262(l)(7)*]), an application seeking approval of a biological product, or

(ii) if the applicant for the application fails to provide the application and information required under section 351(l)(2)(A) of such Act [*42 USCS § 262(l)(2)(A)*], an application seeking approval of a biological product for a patent that could be identified pursuant to section 351(l)(3)(A)(i) of such Act [*42 USCS § 262(l)(3)(A)(i)*], if the purpose of such submission is to obtain approval under such Act to engage in the commercial manufacture, use, or sale of a drug, veterinary biological product, or biological product claimed in a patent or the use of which is claimed in a patent before the expiration of such patent.

(3) In any action for patent infringement brought under this section, no injunctive or other relief may be granted which would prohibit the making, using, offering to sell, or selling within the United States or importing into the United States of a patented invention under paragraph (1).

(4) For an act of infringement described in paragraph (2)–

(A) the court shall order the effective date of any approval of the drug or veterinary biological product involved in the infringement to be a date which is not earlier than the date of the expiration of the patent which has been infringed,

(B) injunctive relief may be granted against an infringer to prevent the commercial manufacture, use, offer to sell, or sale within the United States or importation into the United States of an approved drug, veterinary biological product, or biological product,

(C) damages or other monetary relief may be awarded against an infringer only if there has been commercial manufacture, use, offer to sell, or sale within the United States or importation into the United States of an approved drug, veterinary biological product, or biological product, and

(D) the court shall order a permanent injunction prohibiting any infringement of the patent by the biological product involved in the infringement until a date which is not earlier than the date of the expiration of the patent that has been infringed under paragraph (2)(C), provided the patent is the subject of a final court decision, as defined in section 351(k)(6) of the Public Health

Service Act [*42 USCS § 262(k)(6)*], in an action for infringement of the patent under section 351(l)(6) of such Act [*42 USCS § 262(l)(6)*], and the biological product has not yet been approved because of section 351(k)(7) of such Act [*42 USCS § 262(k)(7)*].

The remedies prescribed by subparagraphs (A), (B), (C), and (D) are the only remedies which may be granted by a court for an act of infringement described in paragraph (2), except that a court may award attorney fees under section 285 [*35 USCS § 285*].

(5) Where a person has filed an application described in paragraph (2) that includes a certification under subsection (b)(2)(A)(iv) or (j)(2)(A)(vii)(IV) of section 505 of the Federal Food, Drug, and Cosmetic Act (*21 U.S.C. 355*), and neither the owner of the patent that is the subject of the certification nor the holder of the approved application under subsection (b) of such section for the drug that is claimed by the patent or a use of which is claimed by the patent brought an action for infringement of such patent before the expiration of 45 days after the date on which the notice given under subsection (b)(3) or (j)(2)(B) of such section was received, the courts of the United States shall, to the extent consistent with the Constitution, have subject matter jurisdiction in any action brought by such person under section 2201 of title 28 for a declaratory

judgment that such patent is invalid or not infringed.

(6) (A) Subparagraph (B) applies, in lieu of paragraph (4), in the case of a patent –

> **(i)** that is identified, as applicable, in the list of patents described in section 351(l)(4) of the Public Health Service Act [*42 USCS § 262(l)(4)*] or the lists of patents described in section 351(l)(5)(B) of such Act [*42 USCS § 262(l)(5)(B)*] with respect to a biological product; and
>
> **(ii)** for which an action for infringement of the patent with respect to the biological product –
>
> > **(I)** was brought after the expiration of the 30-day period described in subparagraph (A) or (B), as applicable, of section 351(l)(6) of such Act [*42 USCS § 262(l)(6)*]; or
> >
> > **(II)** was brought before the expiration of the 30-day period described in subclause (I), but which was dismissed without prejudice or was not prosecuted to judgment in good faith.
> >
> > **(B)** In an action for infringement of a patent described in subparagraph

(A), the sole and exclusive remedy that may be granted by a court, upon a finding that the making, using, offering to sell, selling, or importation into the United States of the biological product that is the subject of the action infringed the patent, shall be a reasonable royalty.

(C) The owner of a patent that should have been included in the list described in section 351(l)(3)(A) of the Public Health Service Act [*42 USCS § 262(l)(3)(A)*], including as pro- vided under section 351(l)(7) of such Act [*42 USCS § 262(l)(7)*] for a biological product, but was not timely included in such list, may not bring an action under this section for infringement of the patent with respect to the biological product.

(f)

(1) Whoever without authority supplies or causes to be supplied in or from the United

States all or a substantial portion of the components of a patented invention, where such components are uncombined in whole or in part, in such manner as to actively induce the combination of such components outside of the United States in a manner that would infringe the patent if such combination occurred within the United States, shall be liable as an infringer.

(2) Whoever without authority supplies or causes to be supplied in or from the United States any component of a patented invention that is especially made or especially adapted for use in the invention and not a staple article or commodity of commerce suitable for substantial noninfringing use, where such component is uncombined in whole or in part, knowing that such component is so made or adapted and intending that such component will be combined outside of the United States in a manner that would infringe the patent if such combination occurred within the United States, shall be liable as an infringer.

(g) Whoever without authority imports into the United States or offers to sell, sells, or uses within the United States a product which is made by a process patented in the United States shall be liable as an infringer, if the importation, offer to sell, sale, or use of the product occurs during the term of such process patent. In an action for infringement of a process patent, no remedy may be granted for infringement on account of the noncommercial use or retail sale of a product unless there is no adequate

remedy under this title for infringement on account of the importation or other use, offer to sell, or sale of that product. A product which is made by a patented process will, for purposes of this title, not be considered to be so made after –

(1) it is materially changed by subsequent processes; or

(2) it becomes a trivial and nonessential component of another product.

(h) As used in this section, the term "whoever" includes any State, any instrumentality of a State, and any officer or employee of a State or instrumentality of a State acting in his official capacity. Any State, and any such instrumentality, officer, or employee, shall be subject to the provisions of this title in the same manner and to the same extent as any nongovernmental entity.

(i) As used in this section, an "offer for sale" or an "offer to sell" by a person other than the patentee, or any designee of the patentee, is that in which the sale will occur before the expiration of the term of the patent.

35 USCS § 282

Current through PL 113-72, with a gap of 113-66, approved 12/26/2013

United States Code Service - Titles 1 through 51 > TITLE 35. > PART III. > CHAPTER 29.

§ 282. Presumption of validity; defenses

(a) In general. A patent shall be presumed valid. Each claim of a patent (whether in independent, dependent, or multiple dependent form) shall be presumed valid independently of the validity of other claims; dependent or multiple dependent claims shall be presumed valid even though dependent upon an invalid claim. The burden of establishing invalidity of a patent or any claim thereof shall rest on the party asserting such invalidity.

(b) Defenses. The following shall be defenses in any action involving the validity or infringement of a patent and shall be pleaded:

> **(1)** Noninfringement, absence of liability for infringement or unenforceability,
>
> **(2)** Invalidity of the patent or any claim in suit on any ground specified in part II [*35 USCS §§ 100* et seq.] as a condition for patentability.
>
> **(3)** Invalidity of the patent or any claim in suit for failure to comply with–

(A) any requirement of section 112 [*35 USCS § 112*], except that the failure to disclose the best modeshall not be a basis on which any claim of a patent may be canceled or held invalid or otherwise unenforceable; or

(B) any requirement of section 251 [*35 USCS § 121*].

(4) Any other fact or act made a defense by this title.

(c) Notice of actions; actions during extension of patent term. In actions involving the validity or infringement of a patent the party asserting invalidity or noninfringement shall give notice in the pleadings or otherwise in writing to the adverse party at least thirty days before the trial, of the country, number, date, and name of the patentee of any patent, the title, date, and page numbers of any publication to be relied upon as anticipation of the patent in suit or, except in actions in the United States Court of Federal Claims, as showing the state of the art, and the name and address of any person who may be relied upon as the prior inventor or as having prior knowledge of or as having previously used or offered for sale the invention of the patent in suit. In the absence of such notice proof of the said matters may not be made at the trial except on such terms as the court requires. Invalidity of the extension of a patent term or any portion thereof under section 154(b) or 156 [*35 USCS § 154(b)* or *156*] because of the material failure–

(1) by the applicant for the extension, or

(2) by the Director,

to comply with the requirements of such section shall be a defense in any action involving the infringement of a patent during the period of the extension of its term and shall be pleaded. A due diligence determination under section 156(d)(2) [*35 USCS § 156(d)(2)*] is not subject to review in such an action.

(12) **United States Patent**
Arazi et al.

(10) **Patent No.: US 6,430,395 B2**

(45) **Date of Patent: Aug. 6, 2002**

(54) **WIRELESS PRIVATE BRANCH EXCHANGE (WPBX) AND COMMUNICATING BETWEEN MOBILE UNITS AND BASE STATIONS**

(75) Inventors: **Nitzan Arazi**, Ramat Hasharon; **Yaron Soffer**, Nes-Ziona; **Halm Barak**, Kfar Saba, all of (IL)

(73) Assignee: **Commil Ltd.**, Ramat Hasharon (IL)

(*) Notice: Subject to any disclaimer, the term of this patent is extended or adjusted under 35 U.S.C. 154(b) by 0 days.

(21) Appl. No.: **09/784,109**

(22) Filed: **Feb. 16, 2001**

Related U.S. Application Data

(60) Provisional application No. 60/195,219, filed on Apr. 7, 2000, and provisional application No. 60/208,306, filed on Jun. 1, 2000.

(51) **Int. Cl.**[7] **H04B 5/00**

(52) **U.S. Cl.** **455/41**; 455/426; 455/432; 455/562; 370/347; 370/466

(58) **Field of Search** 455/555, 561, 455/560, 41, 436, 554, 426, 562, 446, 449 432, 557, 502; 370/331, 347, 466, 467 469; 709/268, 223

(56) **References Cited**

U.S. PATENT DOCUMENTS

5,353,331 A		10/1994	Emery et al.
5,439,496 A		11/1995	Emery et al.
5,506,887 A		4/1996	Emery et al.
5,579,379 A		11/1996	D'Amico et al.
5,610,972 A		3/1997	Emery et al.
5,664,005 A		9/1997	Emery et al.
5,734,699 A		3/1998	Lu et al.
5,758,281 A		5/1998	Emery et al.
5,818,824 A		10/1998	Lu et al.
5,845,211 A		12/1998	Roach
5,887,256 A		3/1999	Lu et al.
5,896,375 A	*	4/1999	Dent et al. 370/347
5,911,120 A		6/1999	Jarett et al.
5,913,163 A		6/1999	Johanssen
5,960,344 A	*	9/1999	Mahany 455/432
5,999,813 A		12/1999	Lu et al.
6,005,856 A		12/1999	Jensen et al.
6,011,975 A		1/2000	Emery et al.
6,021,138 A		2/2000	Lee
6,047,177 A		4/2000	Wickman
6,058,106 A		5/2000	Cudak et al.
6,069,588 A		5/2000	O'Neill
6,163,546 A	*	12/2000	Sipila 370/466
6,175,860 B1	*	1/2001	Gaucher 709/208
6,226,515 B1	*	5/2001	Pauli et al. 455/426

* cited by examiner

Primary Examiner–Tracy Legree
(74) *Attorney, Agent, or Firm*–Mark M. Friedman

(57) **ABSTRACT**

Methods to create a cellular-like communication system, such as a Wireless Private Branch Exchange

(WPBX), which includes mobile devices such as standard cordless phones (handsets), particularly, mobile devices utilizing the Bluetooth short-range wireless communication protocol. The methods provide seamless and reliable handoff of sessions between Base Stations while the mobile device is moving between picocells, by implementing a high-level of synchronization between the Base Stations and the Switch. Base Stations of picocells having small coverage areas communicate with the handsets. The communication protocol is divided into a low-level protocol performed by the Base Stations and a high-level protocol performed by the Switch connected to all the Base Stations. The methods support mobile computing or telephony devices and communication protocols, which are not specified to handle handoffs of sessions while moving between Base Stations coverage areas in a data, voice or telephony wireless network.

12 Claims, 24 Drawing Sheets

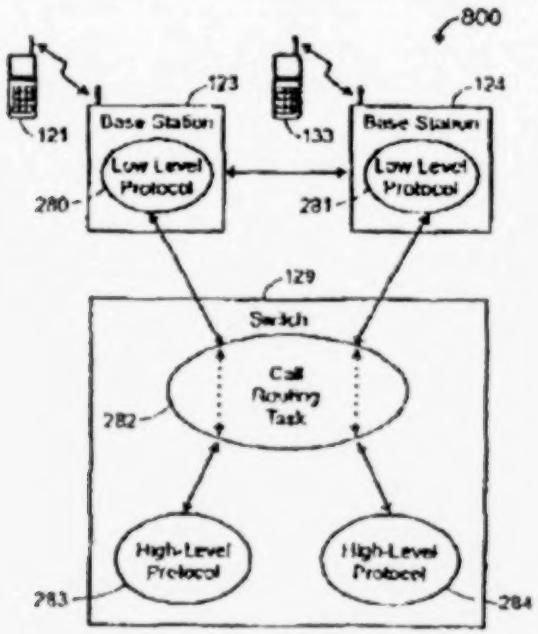

Sheet 1 of 24

Figure 1

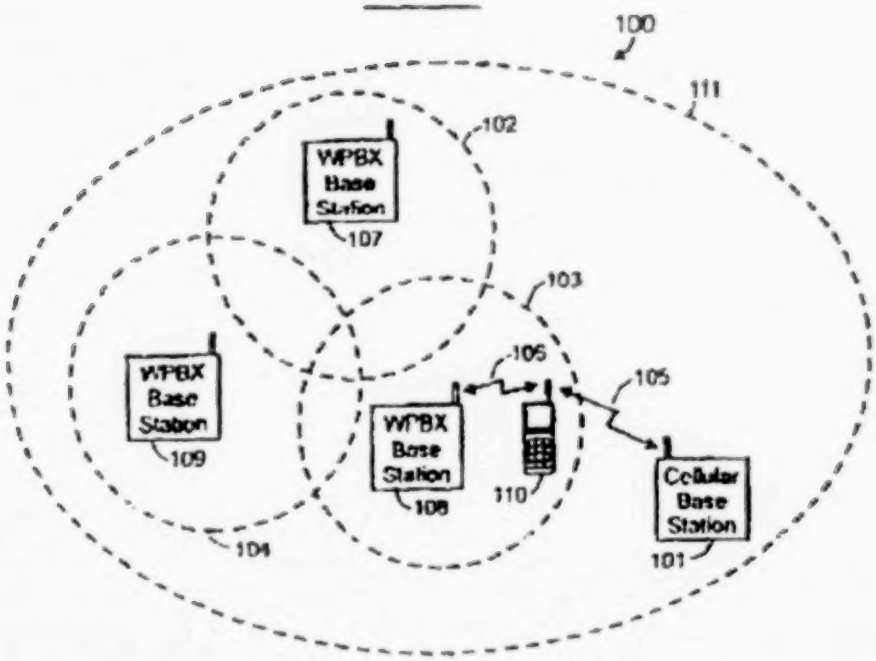

Figure 2

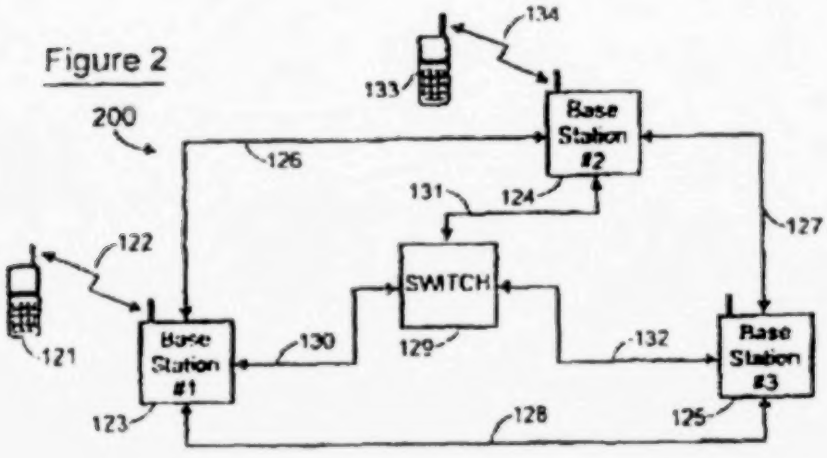

Sheet 2 of 24

Figure 3A

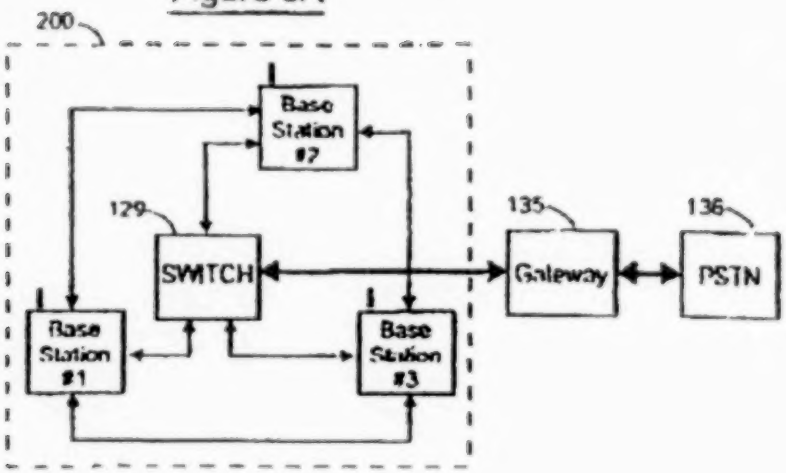

Figure 3B

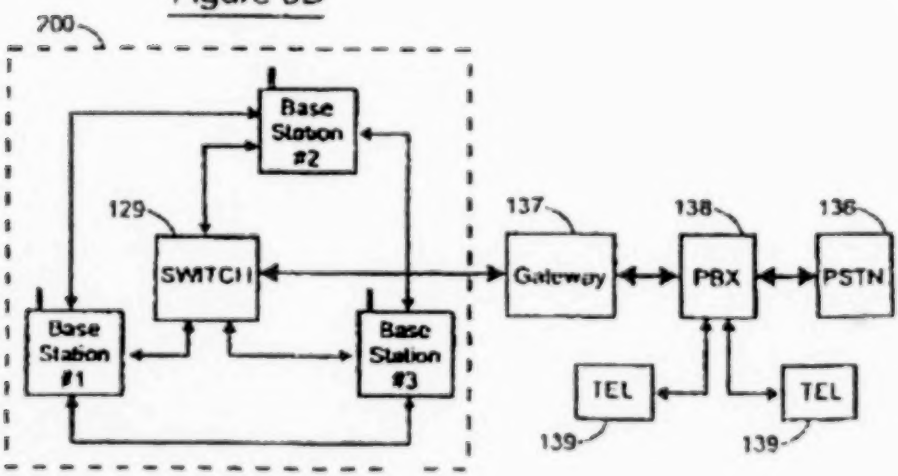

Sheet 3 of 24

Figure 4

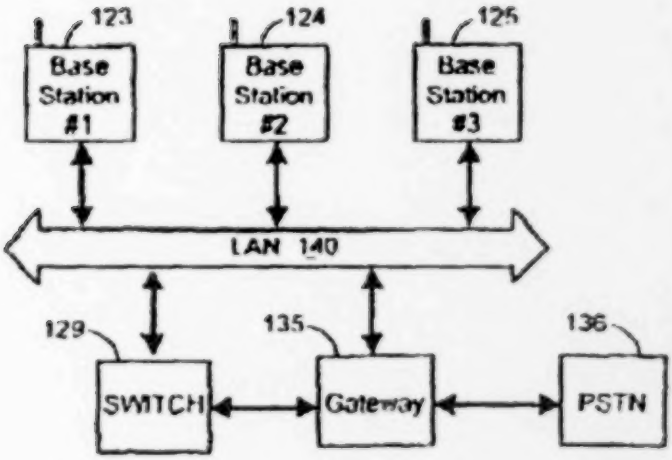

Figure 22

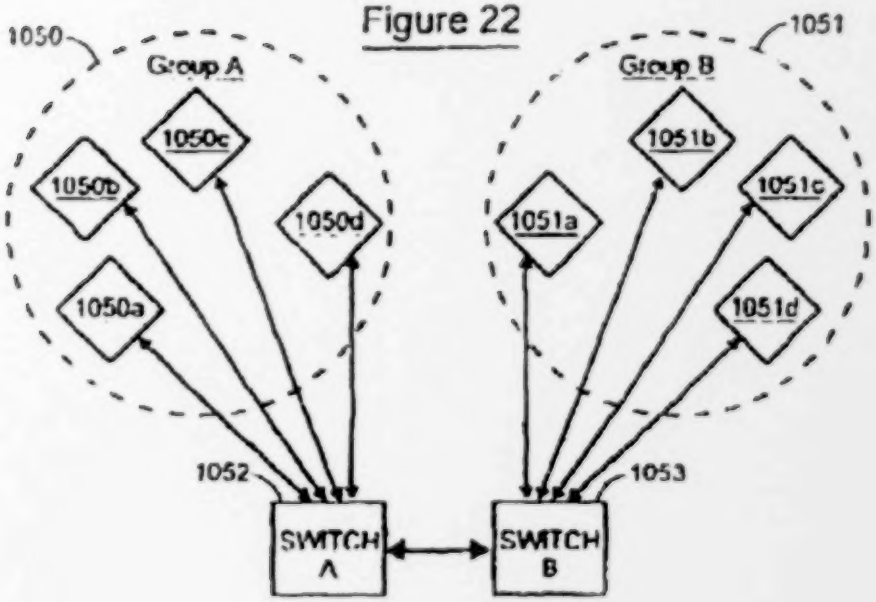

Fig. 5

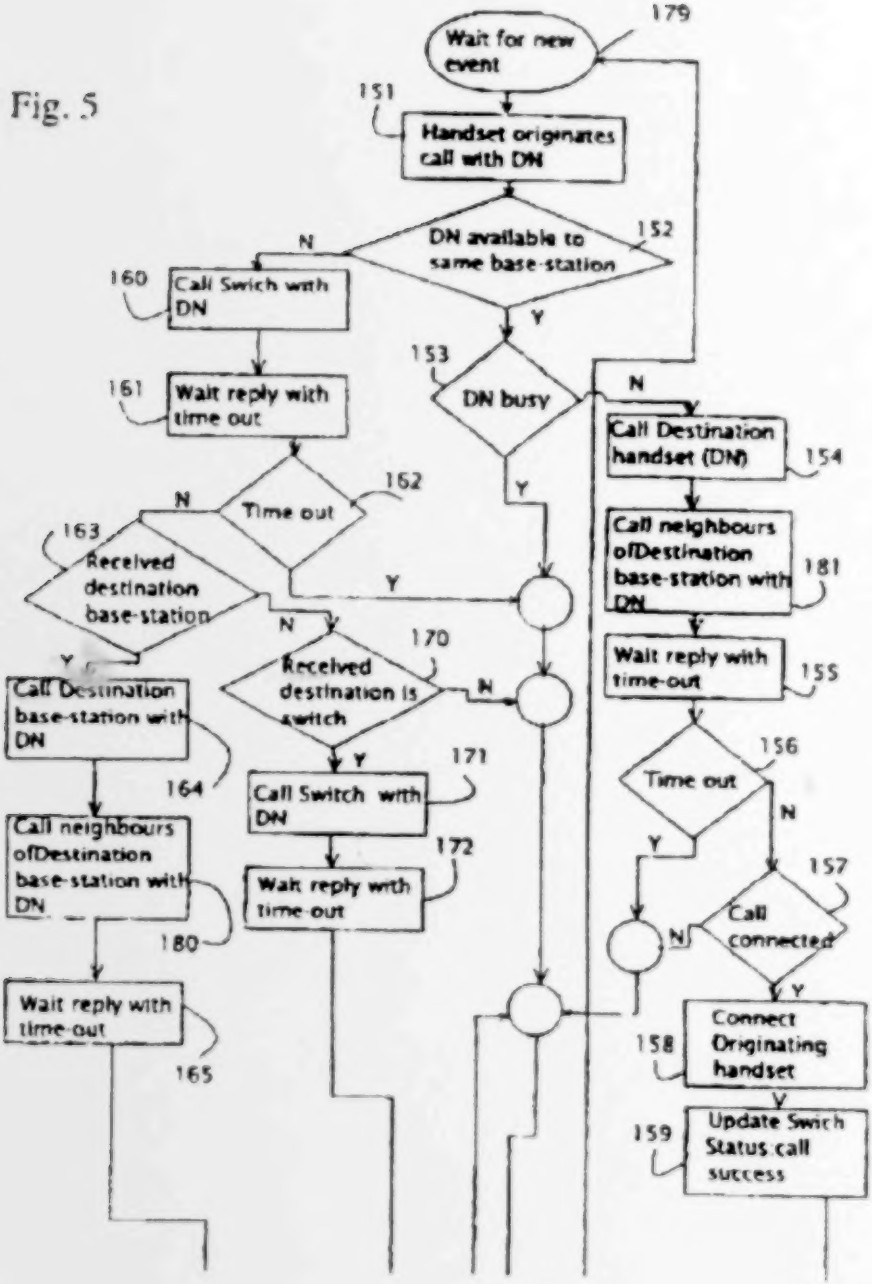
Wait for new event
179
151
Handset originates call with DN
DN available to same base-station
152
N
Y
160
Call Swich with DN
153
DN busy
N
Y
161
Wait reply with time out
Call Destination handset (DN)
154
162
Time out
N
Y
Call neighbours ofDestination base-station with DN
181
163
Received destination base-station
N
Y
Wait reply with time-out
155
170
Received destination is switch
N
Y
Call Destination base-station with DN
164
156
Time out
N
Y
171
Call Switch with DN
Call neighbours ofDestination base-station with DN
172
157
Call connected
N
Y
Wait reply with time-out
180
Wait reply with time-out
158
Connect Originating handset
165
159
Update Swich Status call success

Fig. 5

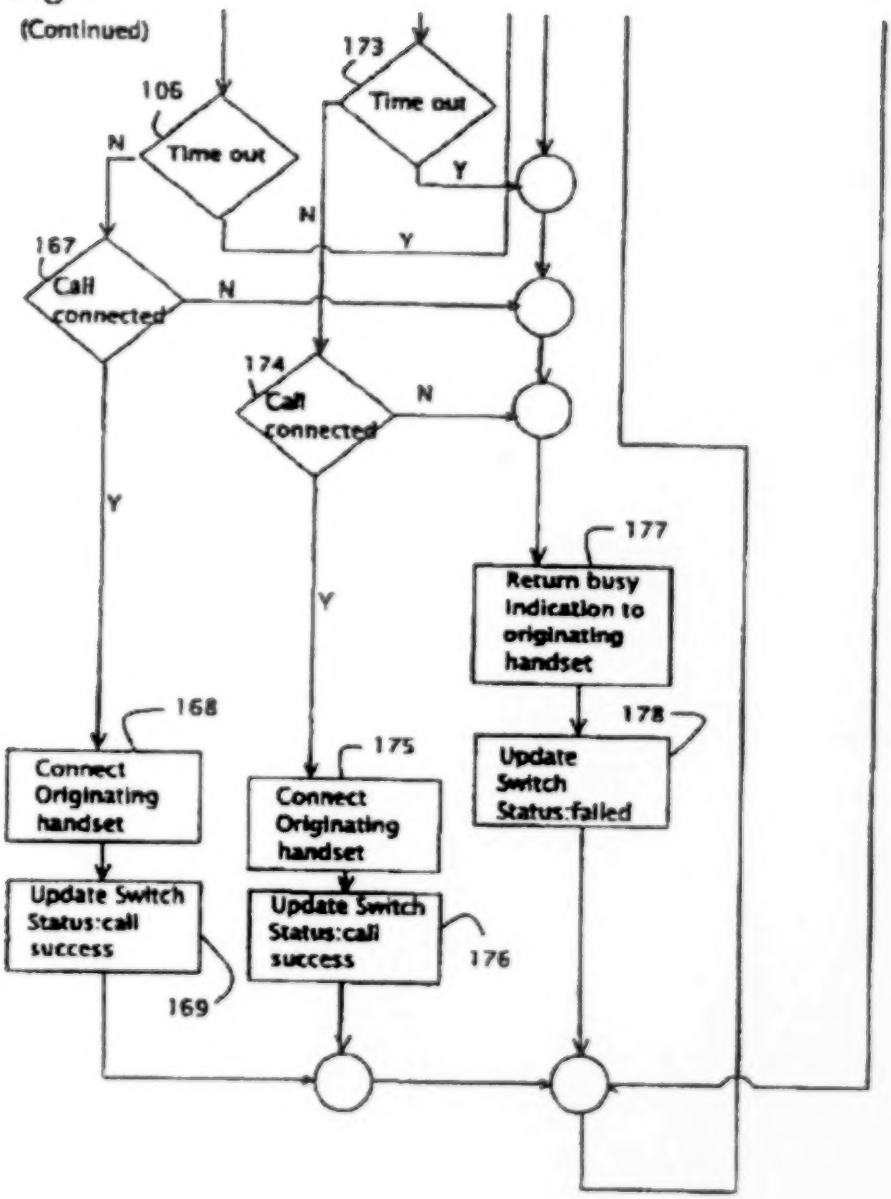
(Continued)
173
Time out
Y
106
Time out
N
N
Y
167
Call connected
N
174
Call connected
N
Y
Y
177
Return busy indication to originating handset
178
Update Switch Status:failed
168
Connect Originating handset
175
Connect Originating handset
Update Switch Status:call success
Update Switch Status:call success
176
169

Sheet 6 of 24

Fig. 6

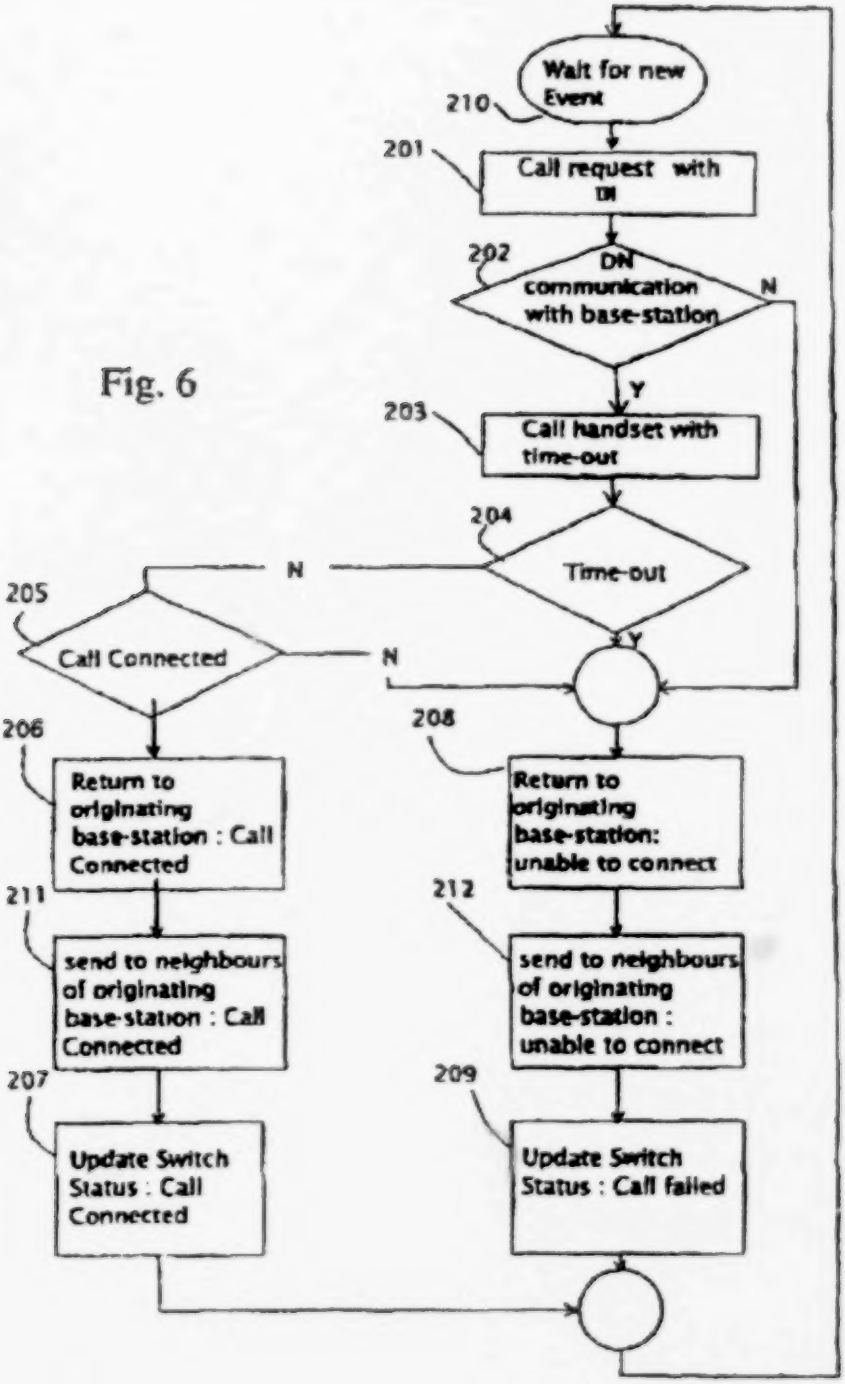

Fig. 7

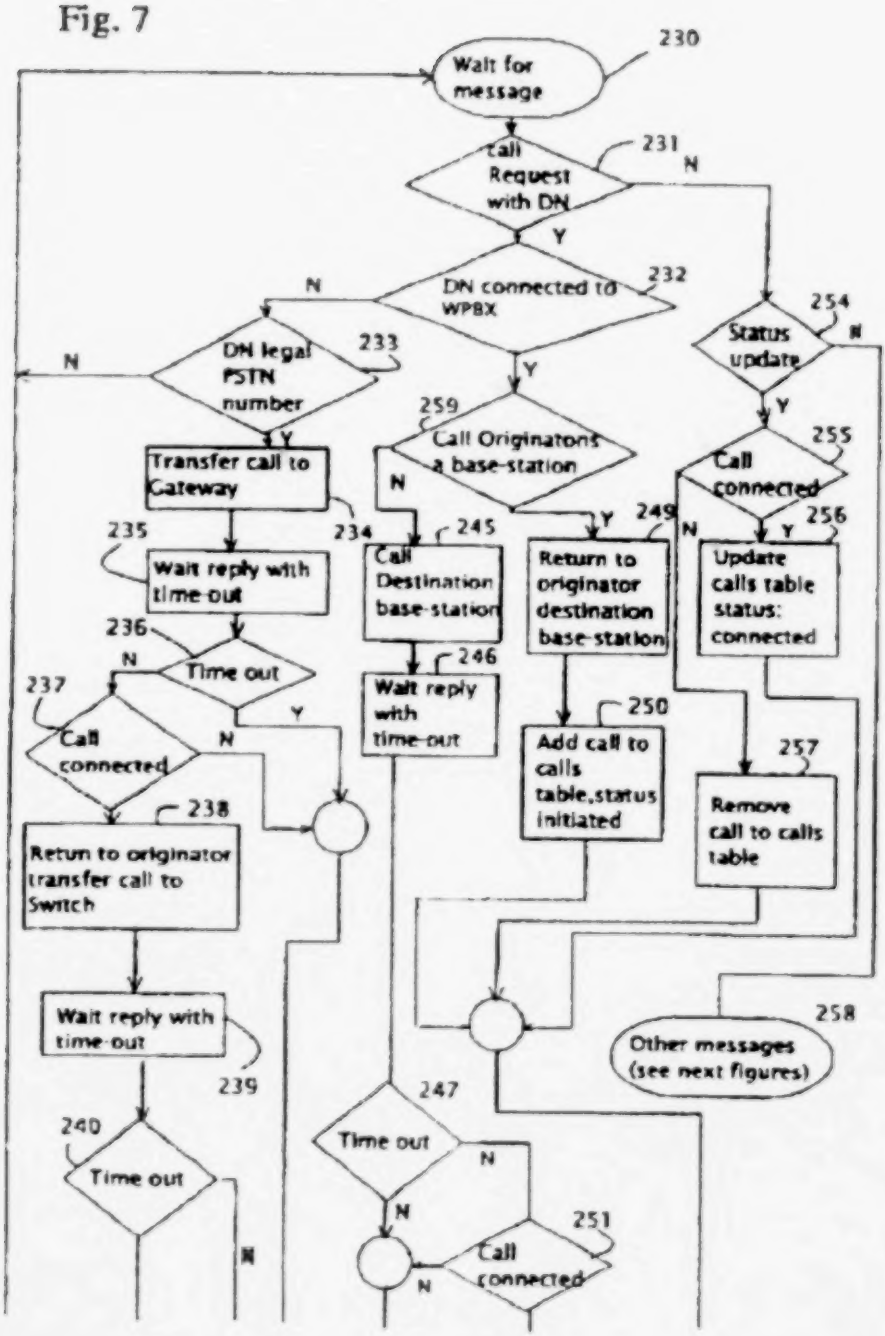
Wait for message
230
Call Request with DN
231
N
Y
DN connected to WPBX
232
N
Y
DN legal PSTN number
233
N
Y
Transfer call to Gateway
234
Wait reply with time-out
235
Time out
236
N
Y
Call connected
237
N
Y
Return to originator transfer call to Switch
238
Wait reply with time-out
239
Time out
240
N
Call Originatons a base-station
259
N
Y
Call Destination base-station
245
Wait reply with time-out
246
Time out
247
N
N
Call connected
251
N
Return to originator destination base-station
249
Add call to calls table,status initiated
250
Status update
254
N
Y
Call connected
255
N
Y
Update calls table status: connected
256
Remove call to calls table
257
Other messages (see next figures)
258

Fig. 7
(Continued)

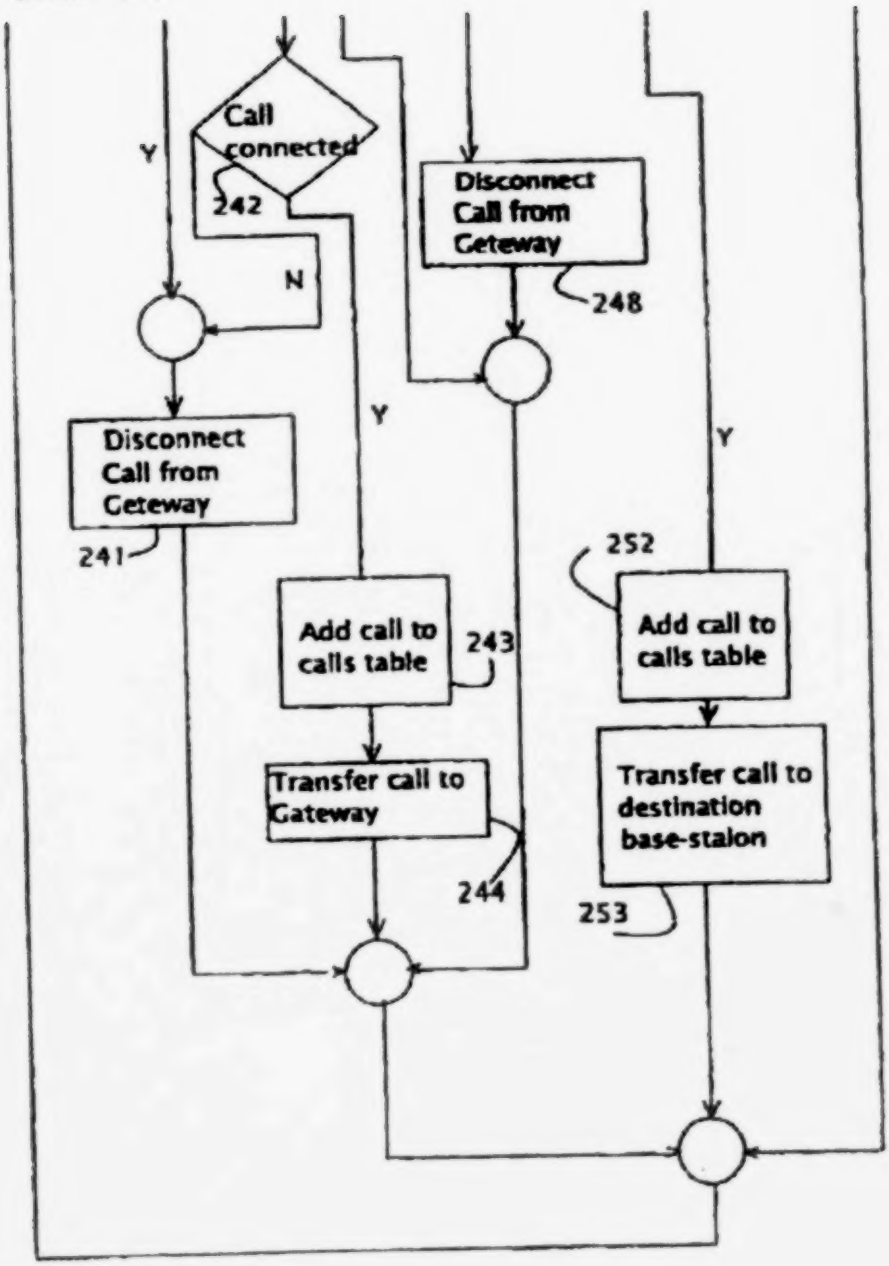

Figure 8A

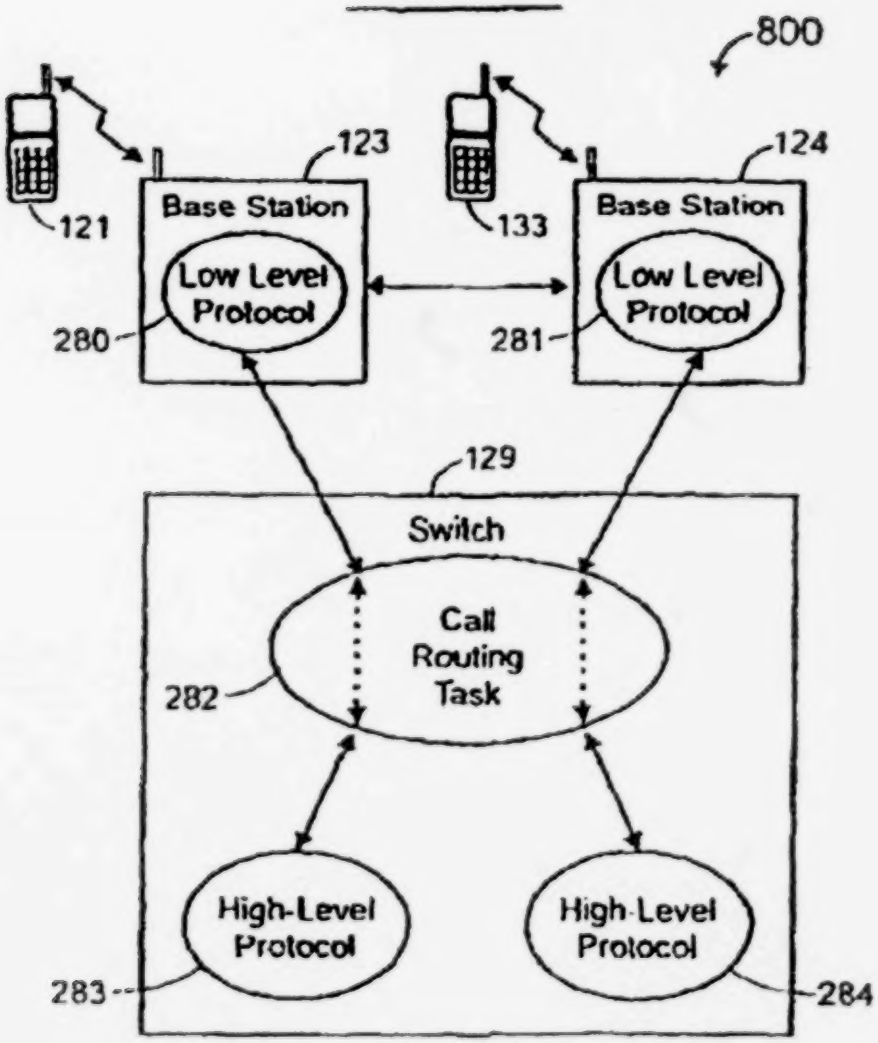
800
123
124
121
133
Base Station
Base Station
Low Level Protocol
Low Level Protocol
280
281
129
Switch
Call Routing Task
282
High-Level Protocol
High-Level Protocol
283
284

Sheet 10 of 24

Figure 8B

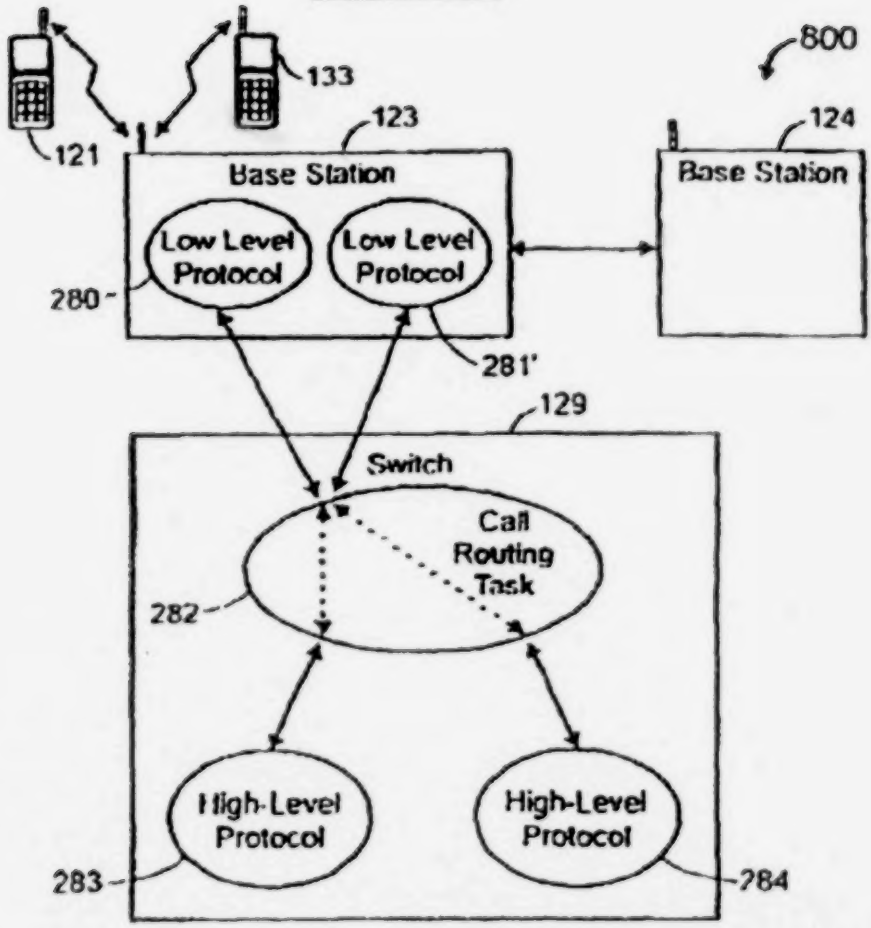

Sheet 11 of 24

Figure 9A

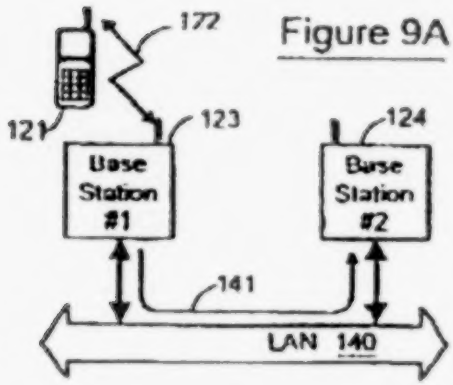

Figure 9B

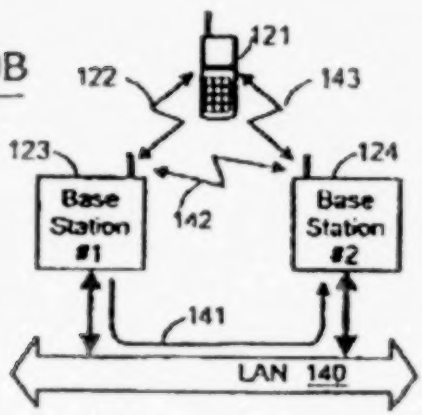

Figure 9C

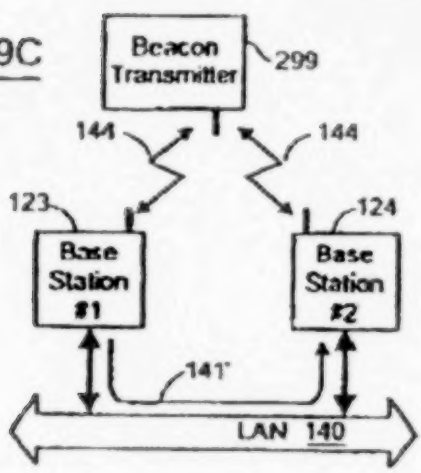

Figure 10

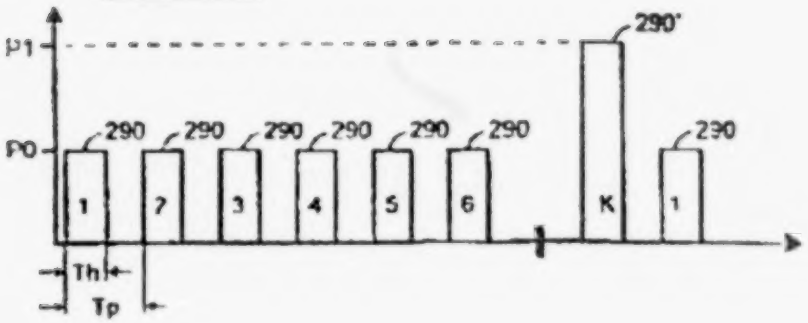

Figure 11

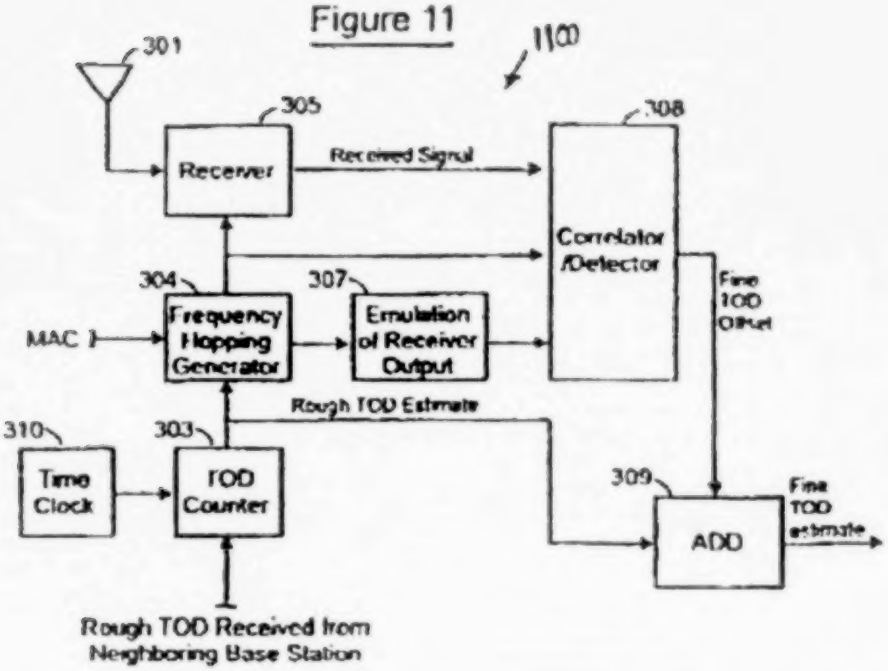

Fig. 12

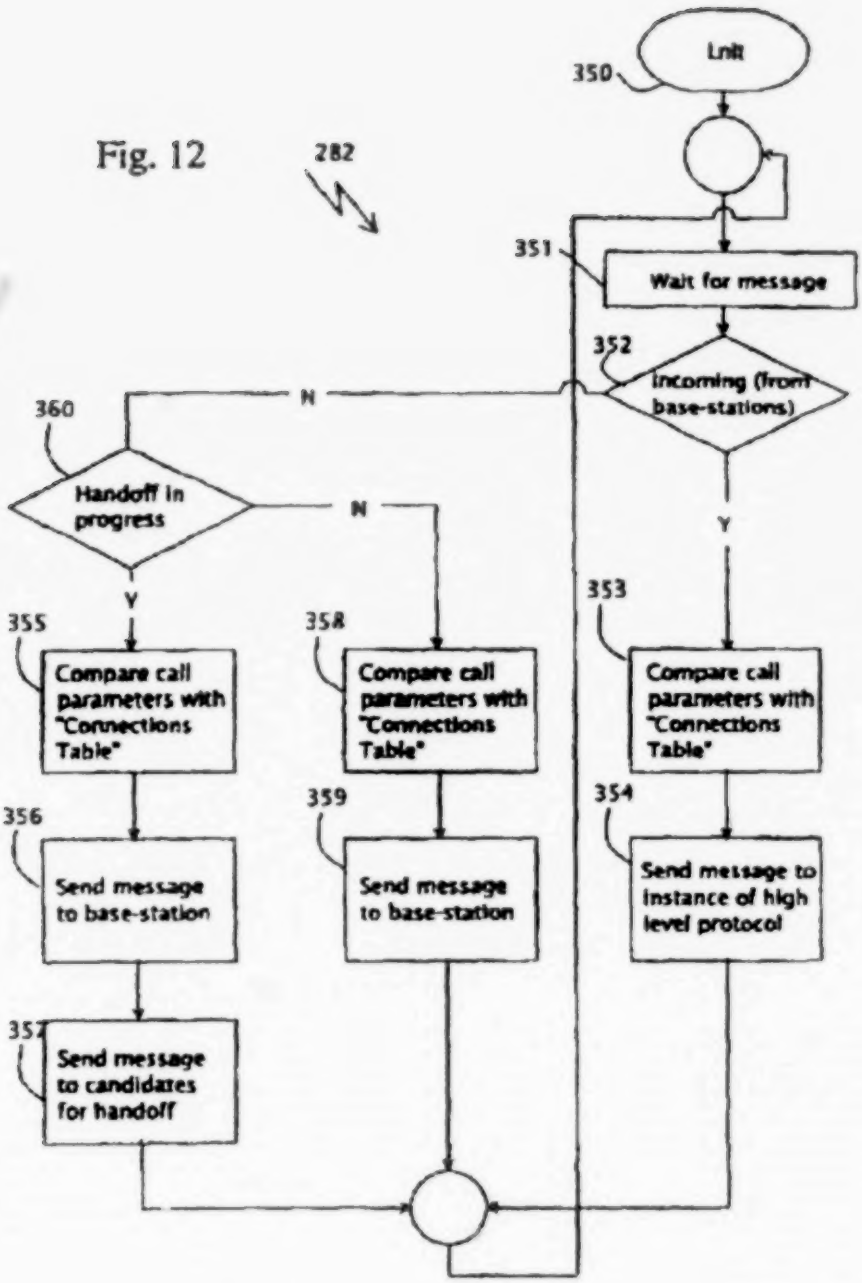
Init
350
282
351
Wait for message
352
Incoming (from base-stations)
N
Y
360
Handoff in progress
N
Y
355
Compare call parameters with "Connections Table"
356
Send message to base-station
357
Send message to candidates for handoff
358
Compare call parameters with "Connections Table"
359
Send message to base-station
353
Compare call parameters with "Connections Table"
354
Send message to instance of high level protocol

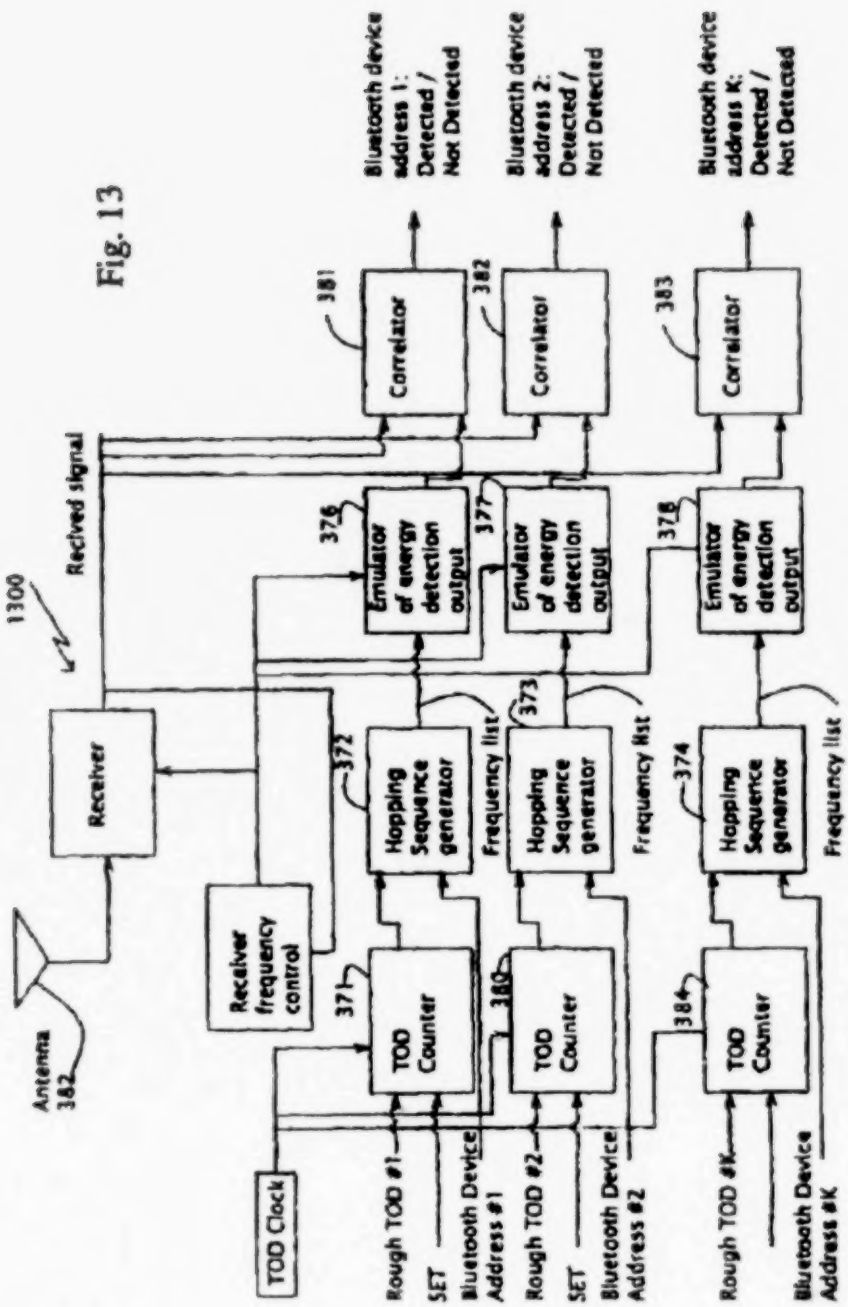
1300
Recived signal
Antenna 382
Receiver
Receiver frequency control
TOD Clock
371
372
373
374
380
384
TOD Counter
Hopping Sequence generator
Frequency list
Rough TOD #1
SET
Bluetooth Device Address #1
Rough TOD #2
SET
Bluetooth Device Address #2
Rough TOD #K
Bluetooth Device Address #K
376
377
378
Emulator of energy detection output
381
382
383
Correlator
Bluetooth device address 1: Detected / Not Detected
Bluetooth device address 2: Detected / Not Detected
Bluetooth device address K: Detected / Not Detected

Fig. 13

Figure 14A

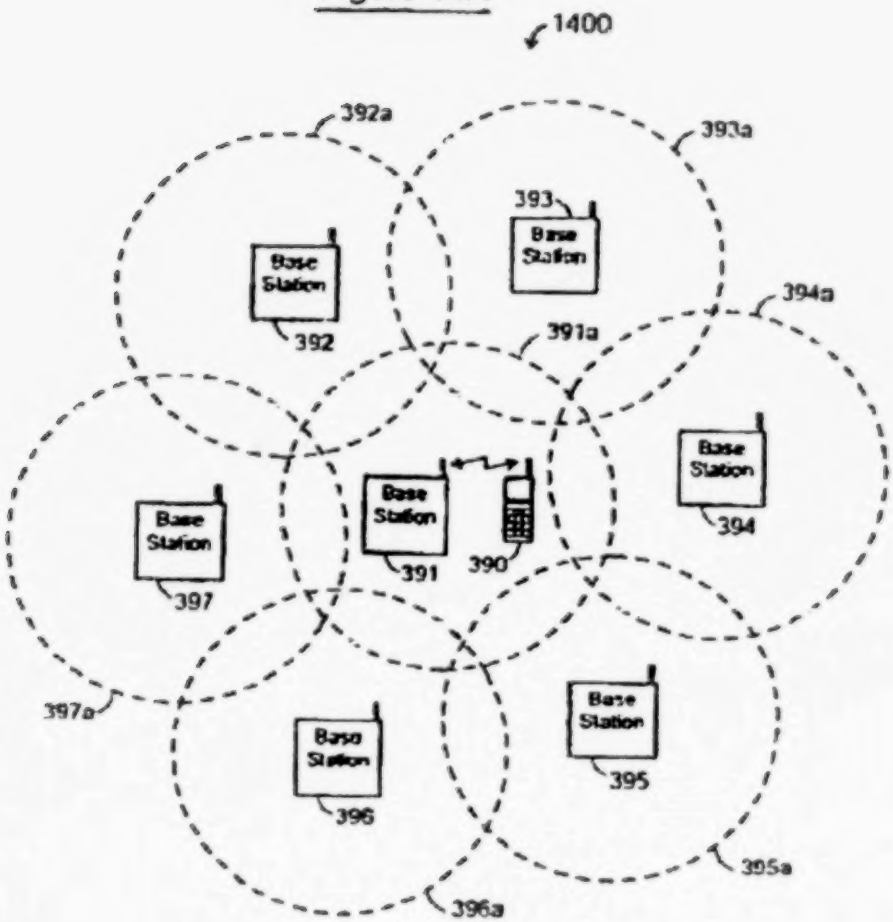
1400
392a
393a
393
Base Station
392
394a
391a
Base Station
394
Base Station
391
390
Base Station
397
397a
Base Station
396
Base Station
395
395a
396a

Sheet 16 of 24

Figure 14B

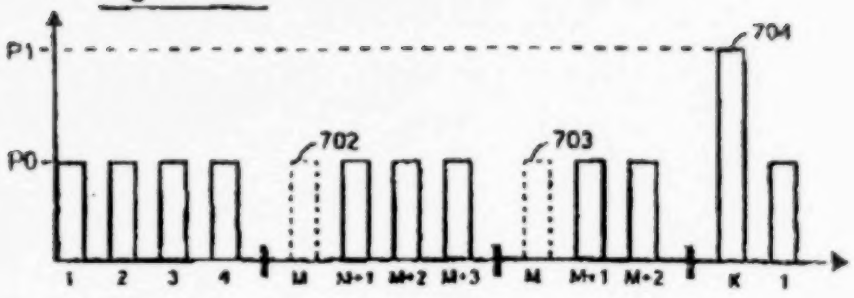

Figure 14C

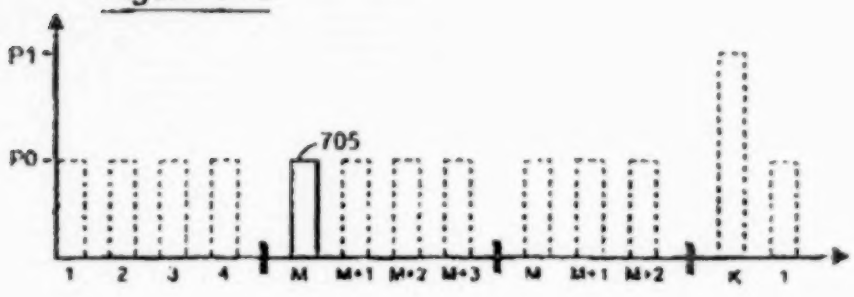

Figure 14D

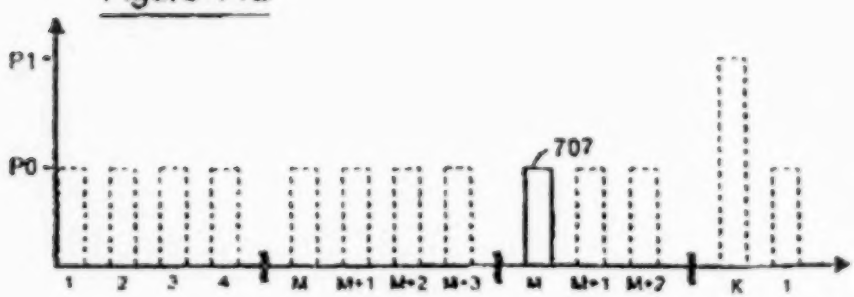

Figure 15A

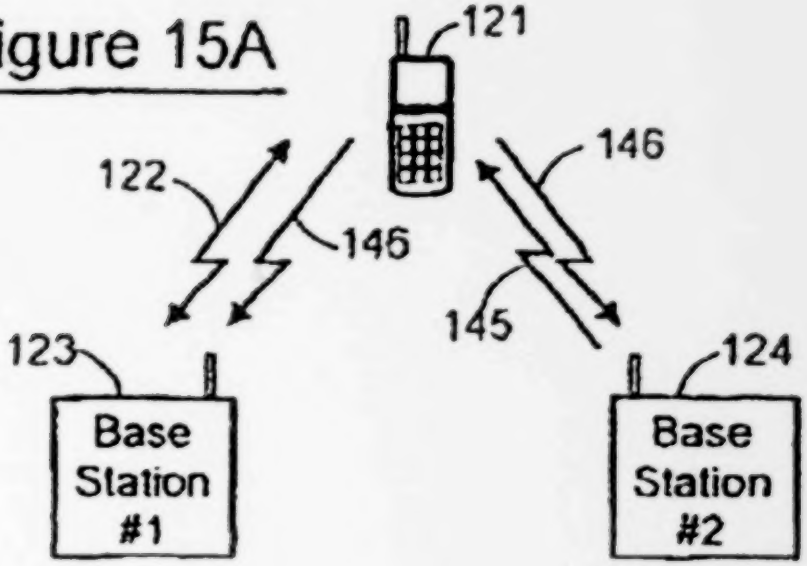

Figure 15B

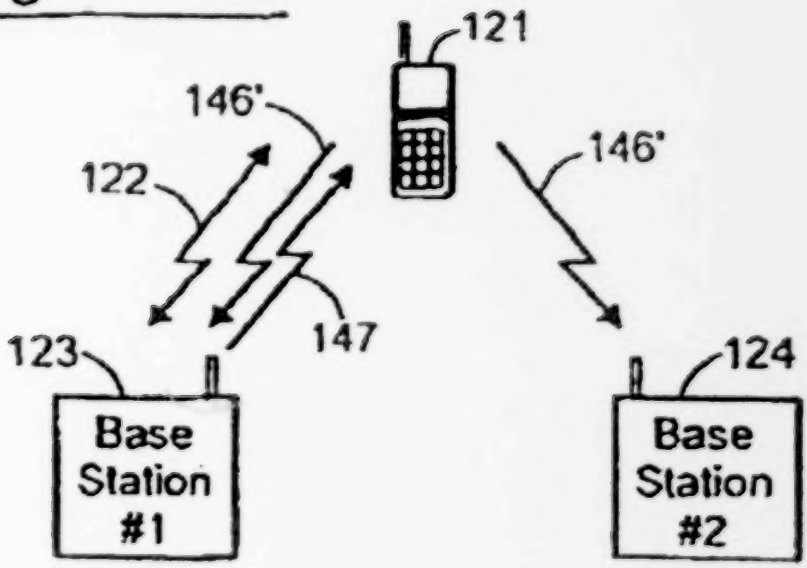

Fig. 16A

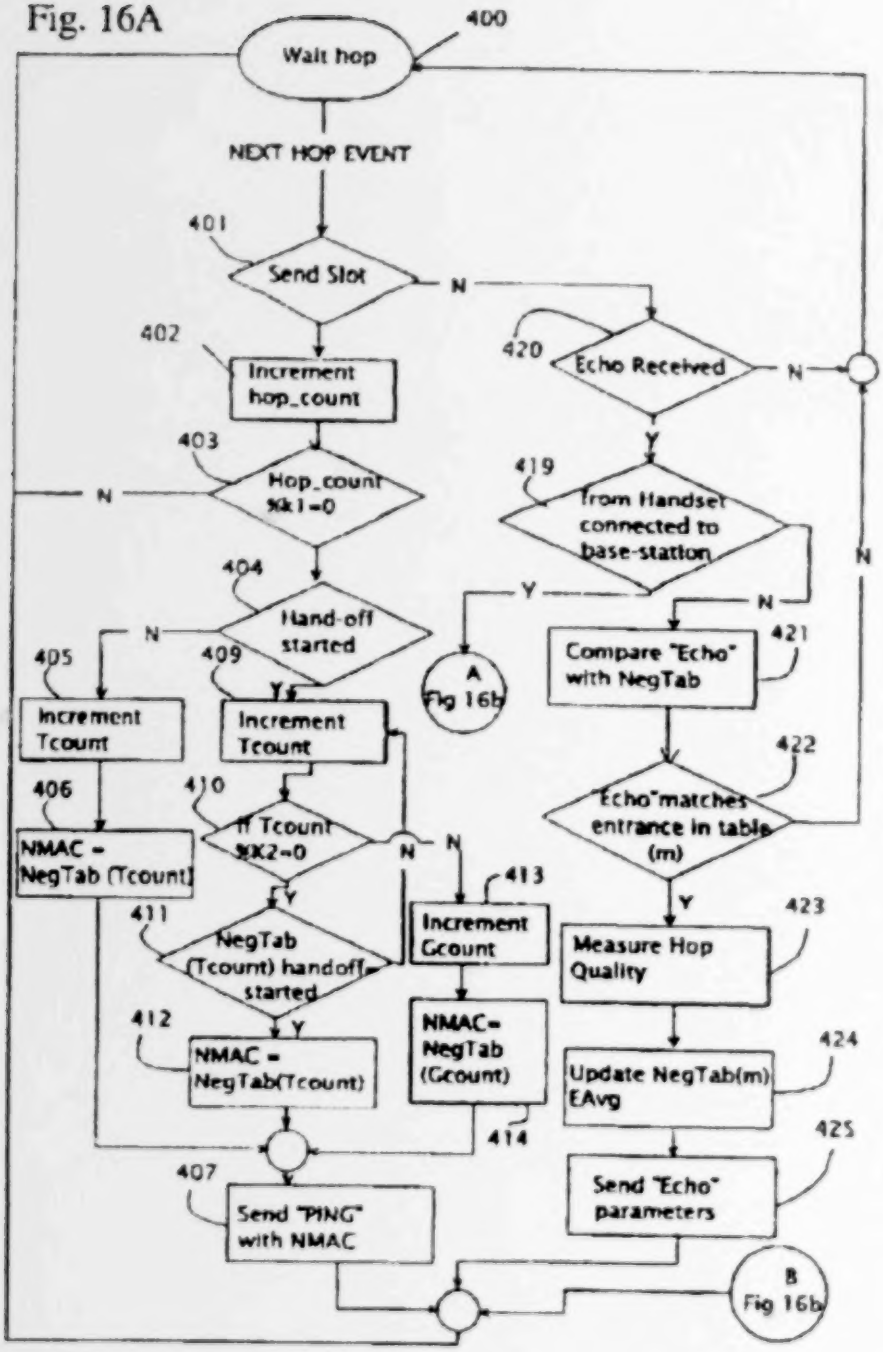
400
Wait hop
NEXT HOP EVENT
401
Send Slot
N
402
Increment hop_count
403
Hop_count %k1=0
N
404
Hand-off started
N
405
Increment Tcount
406
NMAC = NegTab (Tcount)
409
Increment Tcount
Y
410
If Tcount %X2=0
N
Y
411
NegTab (Tcount) handoff= started
Y
412
NMAC = NegTab(Tcount)
413
Increment Gcount
NMAC= NegTab (Gcount)
414
407
Send "PING" with NMAC
420
Echo Received
N
Y
419
From Handset connected to base-station
N
Y
A Fig 16b
421
Compare "Echo" with NegTab
422
"Echo" matches entrance in table (m)
Y
423
Measure Hop Quality
424
Update NegTab(m) EAvg
425
Send "Echo" parameters
B Fig 16b

Fig. 16B

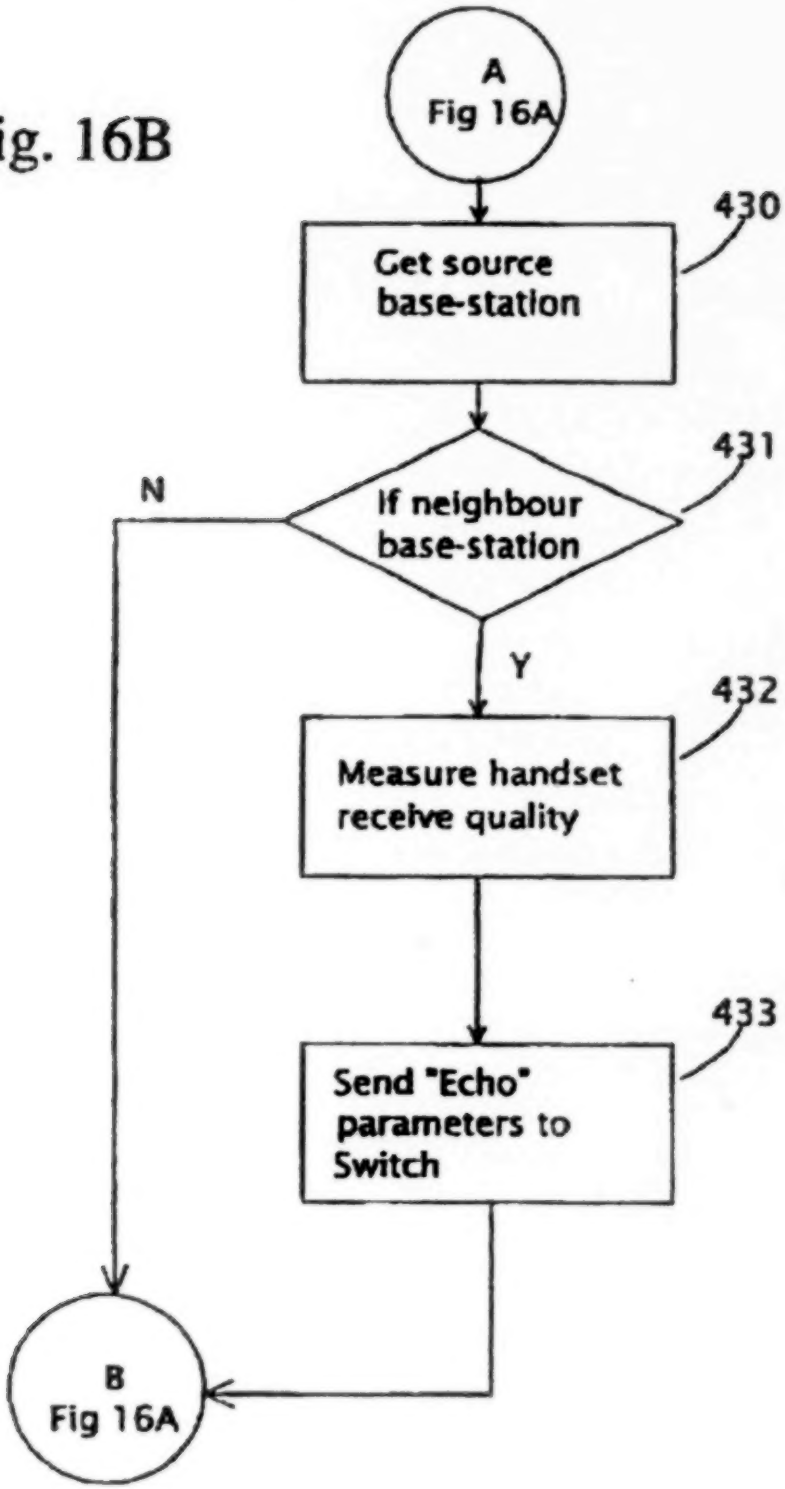
A
Fig 16A
430
Get source base-station
431
If neighbour base-station
N
Y
432
Measure handset receive quality
433
Send "Echo" parameters to Switch
B
Fig 16A

Figure 17A

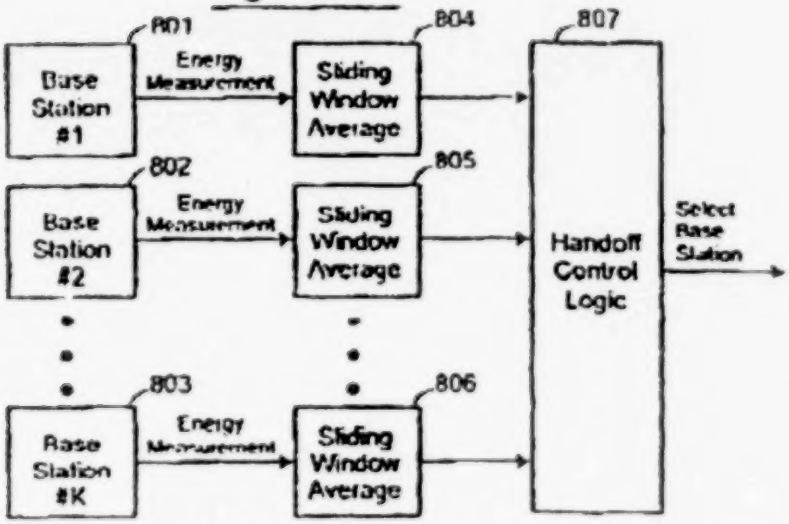

Figure 17B

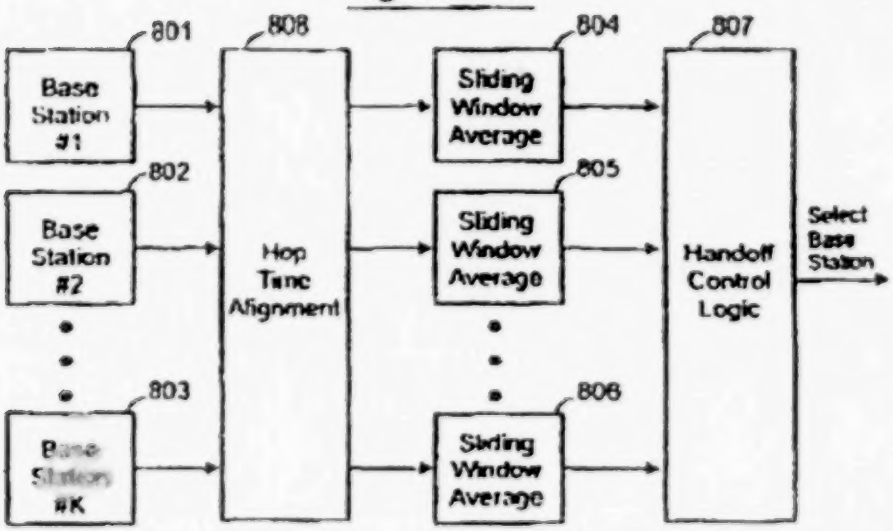

Figure 18

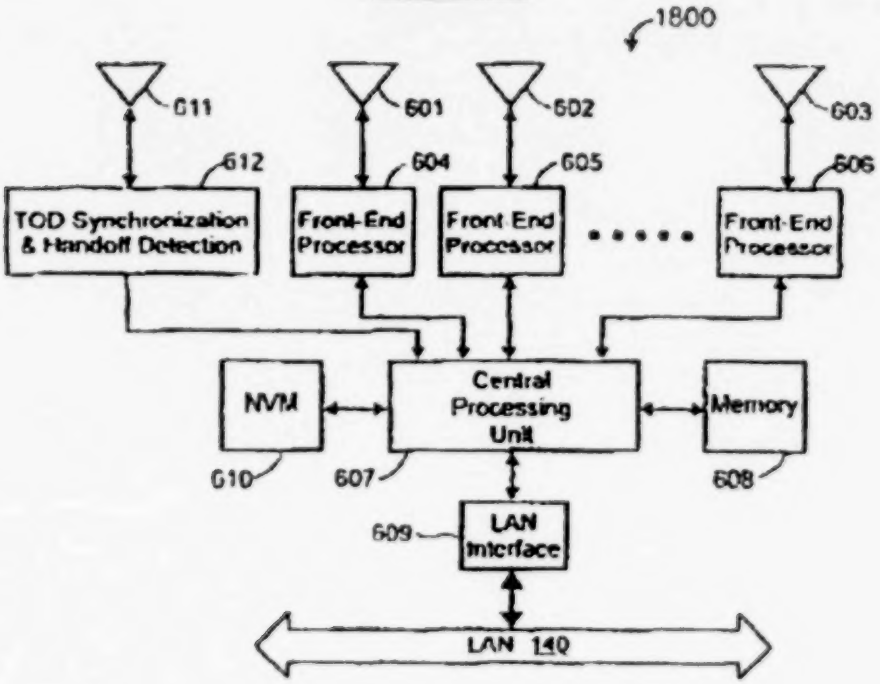

Figure 19

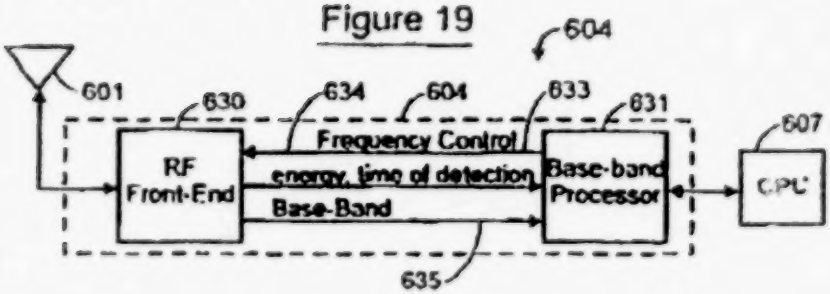

Figure 20

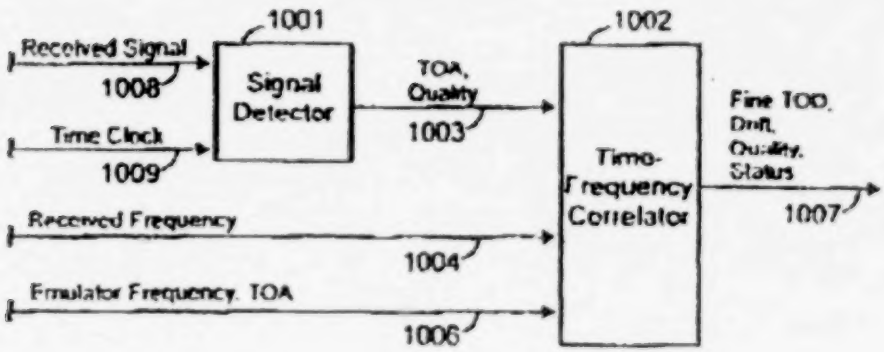

Figure 21

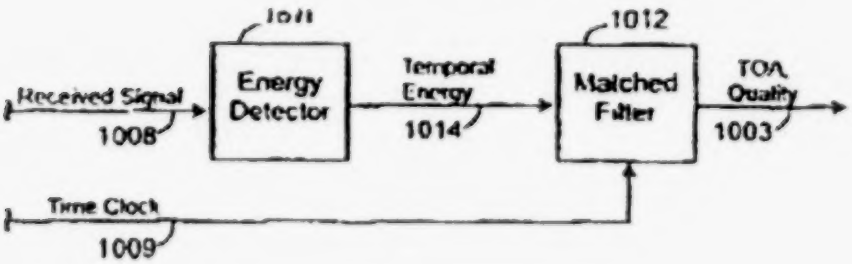

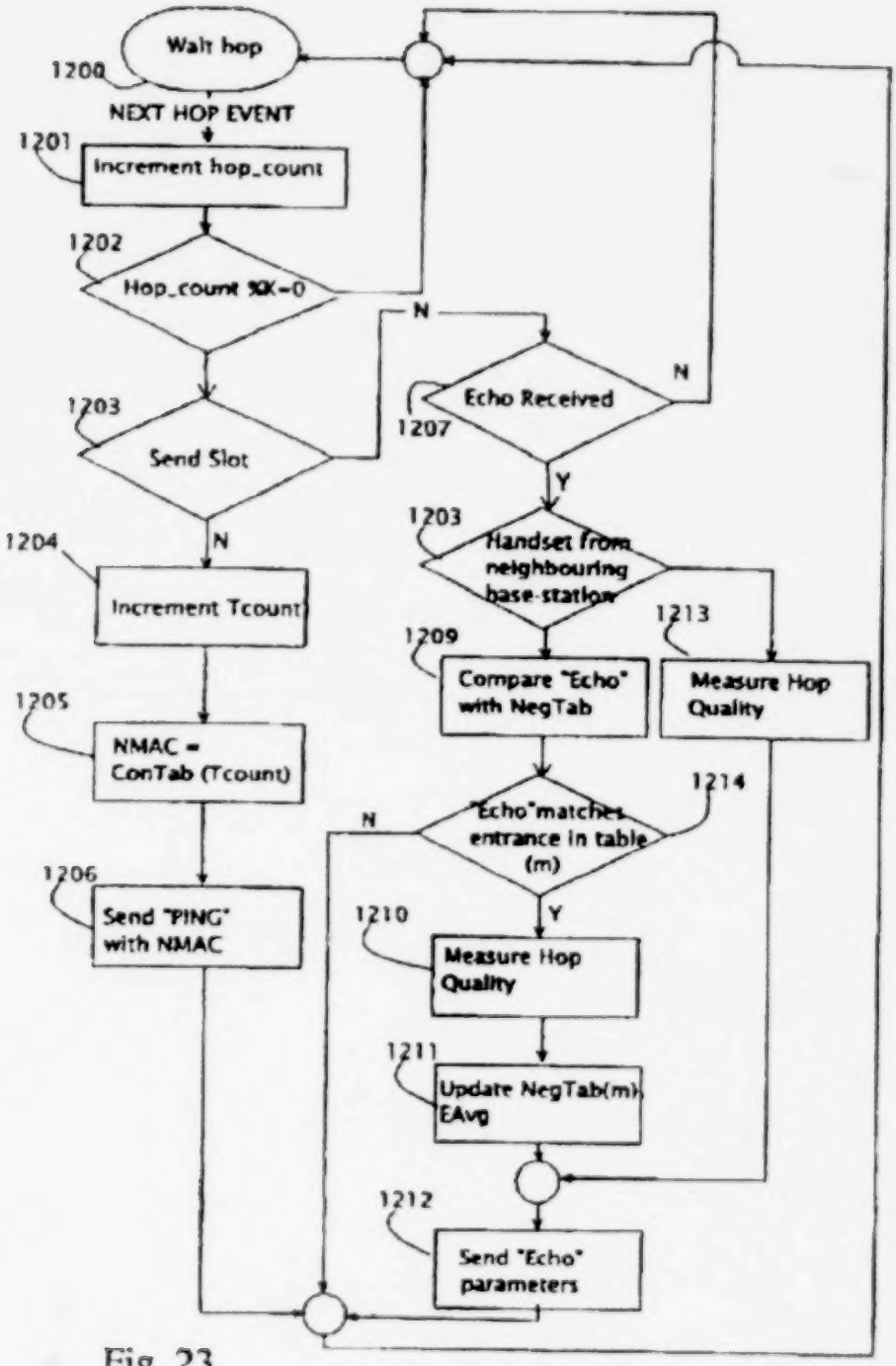
Wait hop
1200
NEXT HOP EVENT
1201
Increment hop_count
1202
Hop_count %K=0
N
1203
Send Slot
N
1204
Increment Tcount
1205
NMAC = ConTab (Tcount)
1206
Send "PING" with NMAC
Echo Received
1207
N
Y
1203
Handset from neighbouring base-station
1209
Compare "Echo" with NegTab
1213
Measure Hop Quality
1214
"Echo" matches entrance in table (m)
N
Y
1210
Measure Hop Quality
1211
Update NegTab(m), EAvg
1212
Send "Echo" parameters

Fig. 23

Sheet 24 of 24

Figure 24

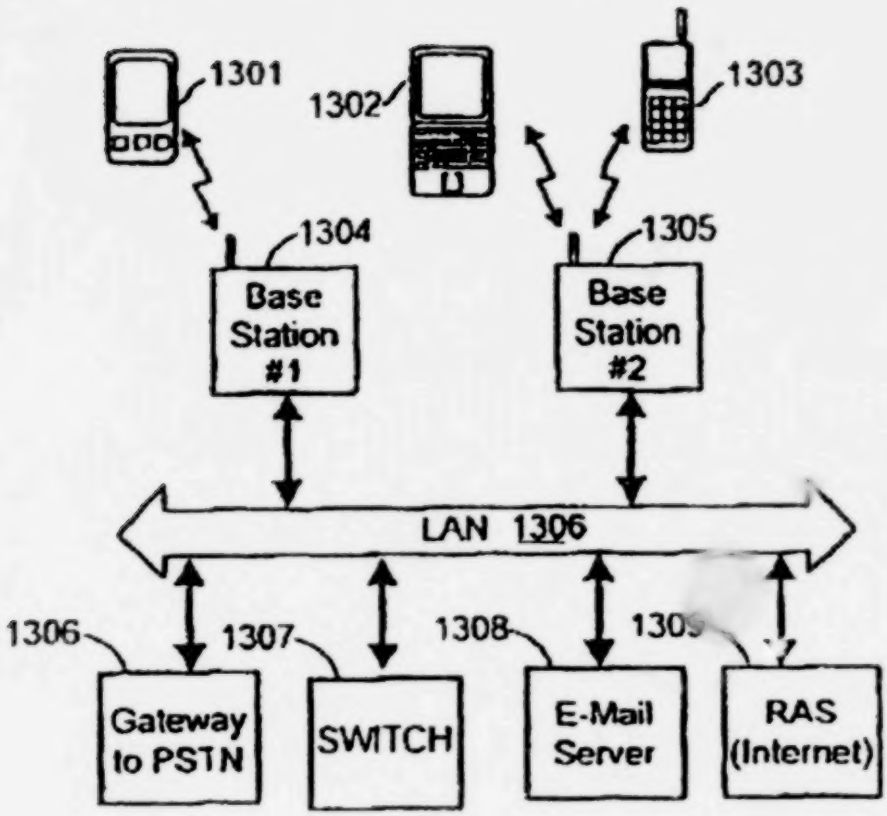

WIRELESS PRIVATE BRANCH EXCHANGE (WPBX) AND COMMUNICATING BETWEEN MOBILE UNITS AND BASE STATIONS

This application claims benefit of Provisional No. 60/195,219 filed Apr. 7, 2000 and claims benefit of Provisional No. 60/208,306 filed Jun. 1, 2000.

TECHNICAL FIELD OF THE INVENTION

The invention relates to wireless communications systems having a plurality of mobile units (devices) having the ability to connect short-range with a plurality of Base Stations, and techniques for handing off a mobile unit from one Base Station to another when the mobile unit moves between areas of coverage of neighboring Base Stations.

BACKGROUND OF THE INVENTION

The effective range of a mobile device, such as a cordless handset, from its Base Station is limited by its transmission power and by the receiver sensitivity of the mobile device and the Base Station. Wireless Private Branch Exchange (WPBX) systems address this limitation by using more than one Base Station (BS). The area that a Base Station covers is called a cell. In the main, hereinafter, mobile units (devices) that are cordless (telephone) handsets are discussed.

In a WPBX, the Base Stations are interconnected in order to allow handsets that are in different cells to communicate with one another. When a handset moves from one cell to another during a call, the handoff (or handover) of communication from one Base Station to another Base Station enables uninterrupted communication. A central unit that is usually called the "Switch" is connected to all the Base Stations. The Switch controls the operation of the system, routes the call to Base Stations and to Gateways, which connect the

WPBX to external communication systems. The transmission power of a cordless handset in the WPBX is usually lower than the transmission power of the handset of a standard cellular system, which results in a WPBX for cordless handsets having much smaller cells (referred to as mini-cells, or micro-cells or picocells) than the cells of a standard cellular system.

Some cordless handsets use communication protocols that are also used in cellular system, but they transmit in a lower power than a mobile (cellular) handset. For examples protocols in use are GSM and IS-136. According to these protocols the handoff between cells is performed by collaboration of the cordless handset, the Base Stations and the Switch. These handsets can connect to the WPBX when they are in its coverage area, and can also connect to any other cellular system that supports the communication protocol that they are using.

Some handsets use communication protocols that were designed especially to allow communication with WPBX. Some examples are DECT, CT-2, PAC, and PACS. The handset is usually a dedicated handset that is used only in the area covered by the WBPX.

Some handsets have dual mode support. For example a handset may communicate with the WPBX using DECT, and may allow communication with other cellular systems using GSM.

Some WPBXs use standard cordless handsets. These handsets have no special mechanism to

support the handoff between cells. In these systems the Switch and the Base Stations perform the handoff, and the handset is not aware of (does not participate actively in) the handoff process. When a standard cordless handset moves from one cell to another the Switch routes the call to another cell. Since cordless phones use "simple" protocols, for example an analog fixed transmission, when the call is routed to the new cell, the cordless phone automatically will receive it.

During the last years short-range communication protocols have become much more complicated. Very low power is used in order to allow many systems to operate in close vicinity. Complex transmissions methods like frequency hopping and spread spectrum are used in order to overcome interference, and improve the communication quality. Digital communication methods are used allowing communication of data and voice on the same system. Error correction encoders are used in order to improve reliability. Security and privacy of the communication is improved with the use of Digital authentication and encryption.

Short-range communication systems are used for many purposes. A growing trend for short-range communication usage is Personal Area Network (PAN) devices and applications, among such is the "all in one handset" and personal data devices. Such type of handset supports standard cellular communication, and also has the ability to communicate with personal area network devices that are in its near vicinity, using short-range communication. Some PAN short-range

communication standards were not designed to allow mobility, i.e. they were not designed to allow handoff in between Base Stations in general and during an active session in particular. This limits a session via such device to be linked to a single Base Station and therefore to very limited area.

The "Bluetooth" standard is a short-range wireless communication standard that has many uses for voice applications and telephony (e.g. cordless phone, wireless headsets) and also for data applications (laptop to personal computer communication, wireless local area network Gateways etc.). The Bluetooth wireless technology is implemented using a universal radio interface in the 2.45 GHz frequency band that enables portable electronic devices to connect and communicate wirelessly via short-range, ad hoc networks. Each unit can simultaneously communicate with up to seven other units per piconet. Moreover, each unit can simultaneously belong to several piconets.

Bluetooth connection is planned to be standard feature in future cellular handsets, Personal Digital Assistants (PDAs), Palmtop and Laptop computers. The Bluetooth standard does not support mobility between Base Stations, since it was primarily designed for short-range communication as a cable replacement. A cellular handset with Bluetooth wireless technology will be able to operate as a cordless phone, but only in the near vicinity of a single Base Station. The same limitation applies to mobile personal data devices such as PDA's and mobile computers.

GLOSSARY

Unless otherwise noted, or as may be evident from the context of their usage, any terms, abbreviations, acronyms or scientific symbols and notations used herein are to be given their ordinary meaning in the technical discipline to which the invention most nearly pertains. The following glossary of terms is intended to lend clarity and consistency to the various descriptions contained herein, as well as in prior art documents:

ATM	Asynchronous Transfer Mode
BER	Bit Error Rate
Bluetooth	short-range wireless communications standard/interface/protocol
BS	Base Station
CPU	Central Processing Unit
CRC	Cyclic Redundancy Check.
CT-2	a communication protocol
DECT	Digital Enhanced Cordless Telephone communication protocol
DN	Destination Number
ECHO	a response to a PING
FIFO	First In, First Out
FTP	File Transfer Protocol
Gateway	an interface for communications between dissimilar services
GHz	GigaHertz
GSM:	Global System for Mobile Communication
handoff	transfer of mobile devices from one Base Station to another Base Station
ID	Identification (number)
IEEE 802.2	Ethernet protocol

IS-136	communication protocol
ISDN	Integrated Services Digital Network
ITU-T 802.15	a communication standard similar to the Bluetooth standard
ITU-T Q.931	a telephony protocol for call setup
IVR	Interactive Voice Response
LAN	Local Area Network
LMSE	Least Mean Square Error
MSC	Mobile Switching Center (MSC)
PAC	a communication protocol
PACS	a communication protocol
PAN	Personal Area Network
PBX	Private Branch Exchange
PABX	Private Automatic Branch Exchange (also referred to as PBX)
PDA	Personal Digital (or Data) Assistant
picocell	a coverage area of a short-range Base Station
PING	a command which is sent, soliciting a response
PPP	Point-To-Point Protocol
PSTN	Public Switched Telephone Network
RF	Radio Frequency
SNR	Signal-to-Noise Ratio
Switch	Apparatus for routing telephone calls
TOD	Time Of Day
WAP	Wireless Application Protocol
WPBX	Wireless Private Branch Exchange

SUMMARY OF THE INVENTION

A general object of the invention is to provide a technique for allowing mobile units (devices) such as standard cordless telephone handsets and PDA (Personal Digital Assistant), laptop or notebook

computers or similar devices that support wireless communication (such as Bluetooth wireless technology) to seamlessly connect to a Wireless Private Branch Exchange (WPBX), or to a standard (wired) PBX or to a LAN or to a cellular telephone network or to a standard wired telephone network, thereby avoiding the use of special (typically expensive) handsets or attachments or software or hardware agents , with the abovementioned mobile devices.

According to the present invention there is provided, in a wireless communication system comprising at least two Base Stations, at least one Switch in communication with the Base Stations, a method of communicating between mobile units and the Base Stations comprising: dividing a communication protocol into a low-level protocol for performing tasks that require accurate time synchronization and a high-level protocol which does not require accurate time synchronization; and for each connection of a mobile unit with a Base Station, running an instance of the low-level protocol at the Base Station connected with the mobile unit and running an instance of the high-level protocol at the Switch.

According to the present invention there is provided, in a wireless communication system comprising a Base Station connected with a mobile unit, a method of synchronizing at least one neighboring Base Station to the Base Station connected with the mobile unit comprising: from the Base Station connected with the mobile unit, sending call parameters and rough synchronization

information to the at least one neighboring Base Station; and at the at least one neighboring Base Station, monitoring transmissions of at least one of: the Base Station connected with the mobile unit; the mobile unit; and a beacon signal from a beacon transmitter which is within range of the at least one neighboring Base Station and the Base Station connected with the mobile unit.

According to the present invention there is provided, in a wireless communication system comprising a plurality of Base Stations and at least one Switch in communication with the Base Stations, a method of synchronizing at least one neighboring Base Station to a Base Station connected with a mobile unit comprising: from the Base Station connected with the mobile unit, periodically transmitting during a selected time interval with higher transmission power than during normal transmission; and receiving the transmission with higher transmission power at the least one neighboring Base Station.

According to the present invention there is provided, in a wireless communication system comprising a Base Station connected with a mobile unit, a method of detecting the presence of a specific mobile unit in a coverage area of at least one neighboring Base Station, comprising: the Base Station connected with the mobile unit provides, to the at least one neighboring Base Station, information about the connection with the mobile unit, including rough TOD and a device address for the mobile unit; at the at least one neighboring Base Station, receiving information and generating a list

of frequencies in which the mobile unit is likely to transmit; and at the at least one neighboring Base Station, checking for a signal transmitted by the mobile unit.

According to the present invention there is provided a method for detecting a mobile unit by a Base Station, wherein frequency-hopping is used to communicate between Base Stations and mobile units, comprising: at a Base Station that is connected to a mobile unit, periodically yielding a hop; and during the hop which has been yielded by the Base Station connected with the mobile unit, communicating with the mobile unit from at least one neighboring Base Station.

According to the present invention there is provided, in a wireless communication system comprising a Base Station connected with a mobile unit, a method of detecting a handset by at least one Base Station which is waiting for the mobile unit to enter its coverage area, comprising: from the at least one Base Station waiting for the mobile unit to enter its coverage area and the Base Station connected with the mobile unit, sending a PING command to the mobile unit; and at the Base Station waiting for the mobile unit to enter its coverage area, receiving an ECHO reply from the mobile unit.

According to the present invention there is provided, in a wireless communication system comprising at least two Base Stations, at least one Switch in communication with the Base Stations, and at least one mobile unit, a method of handing off the mobile unit from a Base Station

communicating with the mobile unit and a neighboring Base Station, comprising: smoothing a plurality of signals received from a handset by a plurality of Base Stations; comparing the signals with one another; and selecting a Base Station for handoff based on signal quality.

According to the present invention there is provided, in a wireless communication system comprising at least two Base Stations and at least one Switch in communication with the Base Stations, a method of performing handoff of a session from a Base Station connected with a mobile unit to a neighboring Base Station, wherein an instance of a low-level communications protocol is running at the Base Station connected with the mobile unit, comprising: at the Switch, determining when to perform handoff to a selected one of the neighboring Base Stations; at the selected one of the neighboring Base Stations, creating a copy of the low-level communications protocol, including at least a synchronized time of day (TOD) parameter; from the Switch, sending a command to stop communication with the mobile unit at a specified TOD to the Base Station connected with the mobile unit and sending a command to start communication with the mobile unit at the specified TOD to the selected one of the neighboring Base Stations; and updating session status tables in the Switch and in the Base Stations.

According to the present invention there is provided, in a wireless communication system comprising a Base Station connected with a mobile unit, a method of detecting and synchronizing with the mobile unit prior to receiving a handoff of a

session with the mobile unit, comprising: from the Base Station connected with the mobile unit, sending rough synchronization information to at least one neighboring Base Station; at the neighboring Base Station, performing a wide-range search for "target" signals having the correct timing for a mobile unit, based on the rough synchronization information provided by the Base Station which is connected with the mobile unit; narrowing the search for an actual signal from the mobile unit; acquiring the target signal; and synchronizing the neighboring Base Station to the Base Station connected with the mobile unit.

According to the present invention, a system comprises one or more mobile units such as standard cordless handsets, two or more Base Stations, and at least one Switch. The Base Stations are connected to one another and to the Switch. The handsets communicate directly with the Base Stations, rather than with one another.

According to an aspect of the present invention, the Base Stations and Switch communicate directly with one another, rather than, for example, over the PSTN. However, the system may interface with the PSTN, the Internet or a LAN, or with a PBX via a Gateway.

According to a feature of the present invention, a method is provided for handing off calls from a one Base Station to another (neighboring) Base Station, with mobile units (e.g., standard cordless handsets) that do not support connection to more than one Base Station and that do not support

mobility with seamless handoff between Base Stations. This is an important feature because the mobile device uses complicated digital communication methods, so simple handoff methods that only the Switch supports are inadequate. Rather, the Switch and Base Stations cooperate with one another for the handoff operation. Accurate synchronization of Base Stations facilitates handoff. Advantageously, the handoff operation does not require explicit cooperation between the mobile device and the Base Stations.

According to an aspect of the present invention, a method is provided for dividing the short-range communication protocol that is used by the handset between high-level protocols which do not need accurate time synchronization and low-level protocols which have strict time synchronization requirements (require accurate time synchronization). The low-level protocols are performed by the Base Stations, and the high-level protocols are performed in the Switch. This enables handoff to be performed even when complex (e.g. frequency hopping, encryption, authentication) and multi-level protocols are used. This also reduces the synchronization requirements between Base Stations.

According to an aspect of the present invention, a method is provided for accurately synchronizing the Base Stations and, more particularly, for synchronizing the Base Stations when frequency-hopping communication is used.

According to an aspect of the present invention, a method is provided for detecting the presence of a mobile device in the coverage area of a Base Station (i.e., its picocell).

According to an aspect of the present invention, a method is provided for determining when to perform handoff of a session(i.e., a phone call, a data link, etc.), and to which Base Station to hand the session, by measuring signal quality at the Base Stations. This method is effective, even when complex transmission methods are used.

The methods disclosed herein are not limited to the communication of a certain type of data. Hence, they can be utilized for telephony applications and for data applications.

Other objects, features and advantages of the invention will become apparent in light of the following description thereof.

BRIEF DESCRIPTION OF THE DRAWINGS

Reference will be made in detail to preferred embodiments of the invention, examples of which may be illustrated in the accompanying drawing figures. The figures are intended to be illustrative, not limiting. Although the invention is generally described in the context of these preferred embodiments, it should be understood that it is not intended to limit the spirit and scope of the invention to these particular embodiments.

In flowcharts presented herein, rectangular boxes generally represent a sequential step being performed, a diamond shaped box generally represents a decision step (test) having two mutually-exclusive results ("Y"=Yes; "N"=No), and an empty circle is not a step or a test, but is merely a graphical junction point at which two or more paths in the flowchart converge.

The structure, operation, and advantages of the present preferred embodiment of the invention will become further apparent upon consideration of the following description, taken in conjunction with the accompanying figures, wherein:

FIG. 1 is a diagram of a cellular system covering a relatively large area and a Wireless Private Branch Exchange (WPBX) system covering a relatively smaller area, illustrating that a cellular handset can communicate with a Base Station of the cellular system and also with Base Stations of the WPBX;

FIG. 2 is a schematic block diagram illustrating main components and architecture of a WPBX system, suitable for use as the WPBX system of FIG. 1;

FIG. 3A is a schematic block diagram of a communications system incorporating a WPBX, such as the WPBX of FIG. 2, with the addition of a Gateway connecting the WPBX to the Public Switched Telephone Network (PSTN);

FIG. 3B is a schematic block diagram of a communications system incorporating a WPBX, such as the WPBX of FIG. 2, with the addition of a Gateway connecting the WPBX to a Private Branch Exchange (PBX);

FIG. 4 is a schematic block diagram illustrating an architecture for a WPBX, with the Base Stations, the Switch and the Gateway interconnected by a local area network (LAN);

FIG. 5 is a flowchart illustrating a procedure for call "setup" at an originating Base Station of a WPBX;

FIG. 6 is a flowchart illustrating a procedure for call "setup" at a receiving Base Station of a WPBX;

FIG. 7 is a flowchart illustrating a procedure for call "setup" at a Switch of a WPBX;

FIGS. 8A and 8B are schematic block diagrams illustrating an architecture for dividing the communication protocol into low-level and high-level protocols for implementation in the Base Stations and in the Switch, respectively, of a WPBX particularly during a handoff, according to the invention;

FIGS. 9A, 9B and 9C are schematic block diagrams illustrating rough and fine synchronization of Base Stations in a WPBX, particularly during a handoff, according to the invention;

FIG. 10 is a graph of a Base Station's transmission power, during hops, illustrating that once in every K hops the energy that the Base Station transmits may be increased to allow other Base Stations that normally do not receive transmissions from the transmitting Base Station to synchronize to the transmitting Base Station, according to the invention;

FIG. 11 is a schematic block diagram illustrating an architecture for major components of a Base Station, according to the invention;

FIG. 12 is a flowchart illustrating a "call routing task" that runs in the Switch in order to isolate the high-level protocols from the occurrence of the handoff, according to the invention;

FIG. 13 is a schematic block diagram illustrating a passive method for detecting arrival of a handset in a Base Station's coverage area during a call, according to the invention;

FIG. 14A is a diagram illustrating a handset communicating with one Base Station, and six other neighboring Base Stations waiting for the handset to enter their coverage area, according to the invention;

FIGS. 14B, 14C and 14D are graphs illustrating transmissions by the Base Station communicating with the handsets, and by the neighboring Base stations, according to the invention;

FIGS. 15A and 15B are diagrams illustrating detection of a handset by a Base Station in communication with the handset and a neighboring Base Station, according to the invention;

FIG. 16A is a flowchart illustrating a procedure that Base Stations may use to detect a handset that enters their coverage area, according to the invention;

FIG. 16B is a flowchart illustrating a procedure that Base Stations may use to determine that a handset connected to them is moving into the coverage area of another Base Station, according to the invention;

FIG. 17A is a schematic block diagram illustrating a method for making a handoff decision, performed in the central Switch, when a passive detection method is used, according to the invention;

FIG. 17B is a schematic block diagram illustrating a method for making a handoff decision, performed in the central Switch, when an active detection method is used, according to the invention;

FIG. 18 is a schematic block diagram of a Base Station comprising a central processing unit (CPU), front end processors, memory, TOD synchronization and handset detection unit, and an interface to a local area network (LAN), according to the invention;

FIG. 19 is a schematic block diagram illustrating the front-end processor of the Base Station of FIG. 18, which comprises a base-band

processor and a radio frequency (RF) front end, according to the invention;

FIG. 20 is a schematic block diagram illustrating the structure of a detector and fine TOD estimator, based on a matching correlator, according to the invention;

FIG. 21 is a schematic block diagram of an implementation for the Time-Frequency Correlator of FIG. 20, according to the invention;

FIG. 22 is a diagram illustrating an implementation of a WPBX system with two Switches, according to the invention.

FIG. 23 is a flow chart illustrating a procedure for transmitting "PING" commands to a handset and receiving "ECHO" responses from the handset, when the Base Station originating the "PING" command is the same Base Station the handset is currently connected to, according to the invention; and

FIG. 24 is a schematic block diagram of a system utilizing the methods of the current invention to support mobility of personal data devices as well as wireless handsets, according to the invention.

DETAILED DESCRIPTION OF THE INVENTION

FIG. 1 illustrates the basic components and operation of an exemplary, overall communication system 100. A Base Station 101 of a cellular system covers a cell 111 having a relatively large coverage area 111. (The Base Station 101 is shown off-center

in its coverage area 111, and the coverage area 111 is shown as elliptical rather than circular, for illustrative clarity.) Base Stations 107, 108 and 109 of a WPBX system cover cells 102, 103 and 104, respectively, each having relatively smaller coverage areas. (The Base Stations 107, 108 and 109 are shown off-center in their respective coverage areas 102, 103 and 104, for illustrative clarity.) Sometimes, these smaller cells 102, 103 and 104 are referred to as "microcells", or "picocells", or "minicells".

A mobile handset 110 can communicate with the cellular Base Station 101 via a communication link 105 and, when it is in the coverage area of the WPBX, it also can use short-range communication link 106, to communicate with one of its Base Stations 107, 108 and 109. In this manner, a standard cellular handset 110, that is enhanced (additionally equipped) with a short-range communication link (e.g. Bluetooth wireless technology) can connect with the WPBX system whenever it is in range of one of the WPBX Base Stations 107, 108 and 109.

The WPBX system can also operate when there is no cellular coverage at all. And the handset 110 can be an ordinary cordless telephone handset. Therefore, the cellular Base Station 101 shown in FIG. 1 is optional, insofar as the WPBX system of the present invention is involved. In the main hereinafter, a handset which is an otherwise ordinary cordless telephone handset, equipped with a short-range communication link (e.g. Bluetooth wireless link) will be used to describe the invention.

In an office environment, a WPBX system improves availability of employees, who carry mobile handsets, and therefore reduces operational cost and increases productivity. In the home environment, a WPBX system enables the use of the standard cellular handsets instead of special cordless phones.

In the present invention, when the handset is the same as the cellular handset, the cost of equipment is lower then the cost of a standard WPBX which requires dedicated handsets. Since the WPBX handles calls between handsets connected to it, the communication charges are lower then when standard cellular communication is used for all the calls.

The handset 110 may indicate to the user that more then one service is available. The user decides which service to use (Cellular or WPBX). The ability to choose between services is a well-known feature in many mobile phones.

It should be understood that the handset 110 is merely an example of a "mobile unit" which can be any of a number of telephony, voice, computing or data devices which communicate via Base Stations, as described in greater detail hereinbelow. As used herein, "Mobile Units" are devices communicating wirelessly with (also referred to as "connected to") Base Stations.

As illustrated in FIG. 1 (and ignoring the cellular Base Station 101 and link 105) the handset 110 is currently communicating with (connected to) the Base Station 108. The Base Stations 107 and 109

are each referred to as "neighboring" Base Stations since they are each adjacent to the Base Station 108 that the handset is currently connected to. The present invention deals largely with how communication with a Mobile Unit such as a handset is handed off (or passed off) from a one Base Station to another (neighboring) Base Station when the handset moves from one minicell to another minicell.

FIG. 2 illustrates the main components and architecture of a WPBX system 200 suitable for use as the WPBX system of FIG. 1. The architecture of a WPBX system generally resembles the architecture of a cellular system. However, as described in greater detail hereinbelow, the function that each component performs is different, since the current invention deals with short-range communication with mobile units that have no built-in support for handoff.

The WPBX 200 comprises a plurality (three shown) of Base Stations 123, 124, 125. A handset 121 communicates via a short-range communication link 122 (e.g. Bluetooth wireless link) with Base Station #1 123. Base Station #2 124 and Base Station #3 125 are ready to receive the call should handset 121 move into their coverage area. At the same time, the other Base Stations may participate in calls with other handsets. For example, Base Station #2 124 communicates via a short-range communication link 134 (e.g. Bluetooth wireless link) with a handset 133. The handsets 121 and 133 may communicate with each other via the WPBX (as

opposed to directly with one another), as described in greater detail hereinbelow.

Communication links 126, 127, 128 connect the Base Stations 123, 124, 125 with one another, as illustrated. These communications links transfer data between the Base Stations 123, 124, 125, including voice communication, data communication, connection status information and synchronization information, as described in greater detail hereinbelow, and may be RF links or land lines (e.g., copper wires, optical fibers, etc.).

Communication links 130, 131, 132 connect the Base Stations 123, 124, 125, respectively, with a Central Switch (hereinafter "Switch") 129. These communication links enable the Switch 129 to control the operation of the Base Stations and to participate in the higher levels of the communication protocols, as described in greater detail hereinbelow, and may be RF links or land lines.

FIG. 3A illustrates the addition of a Gateway 135 to the WPBX system 200 of FIG. 2. The Gateway 135 connects the Switch 129 to a Public Switched Telephone Network (PSTN) 136. This enables the WPBX system 200 to receive incoming calls from and to send outgoing calls to other telecommunication systems (not shown) which are connected to the PSTN. The Gateway 135 may be implemented in any suitable manner, such as in hardware and/or software.

As used herein, a "Gateway" is a logical or physical connection between two different

communication networks. The term implies a need for conversion of some aspect of the information or communication in order to operate, as contrasted with a "port" which implies a point not requiring significant conversion of the message or information. Gateways are well known.

FIG. 3B illustrates the addition of a Gateway 137 to the WPBX system 200 of FIG. 2. The Gateway 137 connects the Switch 129 to a standard Private Branch Exchange (PBX) 138. This enables the WPBX system 200 to receive incoming calls from and to send outgoing calls to standard telephone sets 139 connected to the PBX 138. As illustrated, the PBX 138 is interfaced with the PSTN 136. Thus, the WPBX system 200 can also communicate with other telecommunication systems (not shown) which are connected to the PSTN.

Having dedicated connections for all the Base Stations 123, 124, 125 and the Switch 129, such as illustrated in FIG. 2, hereinabove, is generally not cost-effective. Rather, when real time interaction or synchronization is not required, a shared local network, for example a local area network such as the IEEE 802.2 Ethernet, can connect these units in a cost-effective manner.

FIG. 4 illustrates a plurality (three shown) of Base Stations 123, 124 and 125 (compare FIG. 2) connected via a communications link which is a Local Area Network (LAN) 140 which handles the transfer of information between the Base Stations 123, 124, and 125, the Switch 129 and, in this example, the Gateway 135 to the PSTN 136. Using a standard local area network (LAN) as the

communication backbone allows simple integration with other telephony application servers (not shown), such as IVR (interactive voice response), voice loggers, voice mail and billing systems. The LAN 140 can be either wired, or wireless.

FIGS. 2, 3A, 3B and 4 therefore illustrate, in a general manner, a number of ways in which the main components of a WPBX can be connected with one another, and interfaced with other communications systems (PSTN, PBX, etc.)

For office WPBX applications the Switch 129 may be a standard computer that has the processing power required for handling the switching of hundreds of calls simultaneously. It should support operation in a multi-server environment. This can be achieved with standard server hardware. For home WPBX applications, the Switch 129 may be a part of one Base Station, or a part of several Base Stations.

Call Setup Procedures

FIGS. 5, 6 and 7 illustrate call setup procedures for a single call at an "originating" Base Station (e.g., 123), at a "receiving" Base Station (e.g., 124), and at the Switch (e.g., 129), respectively. Call setup between the handset (e.g., 121) and the Base Station it is connected to (e.g., 123) is suitably performed according to standard telephony protocols, for example ITU-T Q.931. A similar protocol is a part of the Bluetooth protocol stack. However, the present invention is not limited to a specific protocol for call setup.

FIG. 5 illustrates a call setup procedure performed by an originating Base Station (e.g. 123) when a handset (e.g., 121) that is connected to it, tries to initiate a call. As shown in the step 151, the handset that is originating the call sends a destination number (DN). In a next step 152, the originating Base Station (e.g., 123) checks whether the destination handset (e.g., 133) is in its "Base Station Connection Table"--in other words, whether the destination handset is in the originating Base Station's coverage area. If not (step 152, "N"), in a step 160 the destination number (DN) is sent via the communications link (e.g., LAN 140) to the central WPBX Switch (e.g., 129). The originating Base Station then sets a timeout (step 161), and waits for a reply from the Switch. The timeout set in the step 161 is suitably on the order of up to 5 seconds. Next, it is determined in a step 162 whether there is a timeout.

If there is a timeout (step 162, "Y"), the Base Station sends a busy indication (suitably a tone) to the originating handset (step 177), and the Switch is updated about the failure of the call (step 178). If, there is not a timeout (step 162, "N"), the originating Base Station receives (from the Switch) the address of a destination Base Station (step 163). The originating Base Station then calls the destination Base Station (step 164), and it also calls all the neighbors (neighboring Base Stations) of the destination Base Station (step 180). Then the originating Base Station sets a timeout (step 165) and waits for a reply from the called Base Station (and its neighbors). Calling more then one destination Base Station is preferred in order to

overcome uncertainties during handoff. The timeout set in the step 165 is suitably on the order of up to 5 seconds. Next, it is determined in a step 166 whether there is a timeout.

If there is a timeout (step 166, "Y"), the Base Station sends a busy tone to the originating handset (step 177), and the Switch is updated about the failure of the call (step 178). If, there is not a timeout (step 166, "N"), and a reply from the destination Base Station is received, the originating Base Station checks if the call is connected (step 167), and then connects the originating handset (step 168), and updates the Switch about the success of the call (step 169).

If, in the step 163 the address of a destination Base Station is not received (N), it is determined (step 170) whether the destination of the call is the Switch itself. If so (step 170, "Y"), a procedure similar to that for sending a call to another Base Station is implemented, except that the call is sent to the Switch (step 171) and not to another Base Station. Then the originating Base Station sets a timeout (step 172) and waits for the Switch to reply (step 173). The timeout is suitably on the order of up to 5 seconds. Next, it is determined in the step 173 whether there is a timeout.

If there is a timeout (step 173, "Y"), the Base Station sends a busy tone to the originating handset (step 177), and the Switch is updated about the failure of the call (step 178). If the Switch responds that the call is connected, there is not a timeout (step 173, "N"), and the originating Base Station

connects the handset (step 175), and updates the Switch (step 176) about the status of the call.

If it is determined that the destination handset is in the originating Base Station's coverage area (step 152, "Y"), and a busy signal is not returned (step 153, "N"), the originating Base Station then attempts (step 154) to connect the call to the destination handset, and also to all the neighboring Base Stations (step 181). Again, the calling of neighboring Base Stations is preferred in order to overcome uncertainties, such as the handset moving, during the call setup. Then the originating Base Station performs a procedure similar to that described hereinabove of setting a timeout (step 155), waiting for the Switch to reply (step 156), connecting (step 158) or disconnecting (step 177) the call, and updating the Switch (steps 159 or 178).

In summary, the call setup procedure performed by an originating Base Station (e.g., 123) is that, first, the originating Base Station determines whether a call request from an originating handset (e.g., 121) is:

a. to a DN in the originating Base Station's coverage area (e.g., step 152), in which case the originating Base Station attempts (step 181) to also connect the call to its neighboring Base Stations; or

b. to a DN in another Base Station's coverage area (e.g., step 164), in which case the originating Base Station attempts (step 180) to also connect the call to Base

Stations which are neighbors of the destination Base Station; or

c. to a DN outside of the WPBX coverage area and is to be routed through a Gateway (see FIG. 7) associated with the Switch (steps 170, 171).

In each case, the originating Base Station then:

d. sets a timeout (steps 155, 165, 172);

e. waits for the Switch to reply (steps 156, 166, 173) that the call is connected (steps 157, 167, 174)

f. connects the originating handset (steps 158, 168, 175);

g. updates the Switch (steps 159, 169, 176) about the status of the call; and

h. waits (step 179) for a new event (a new call setup).

FIG. 6 illustrates the call setup procedure performed at a destination Base Station (e.g., 124) which is receiving a call, whether it be from another Base Station or from the Switch. When the destination Base Station receives a request (step 201) to connect a call to a handset (e.g., 133) which is reportedly within its coverage area, it first checks (step 202) whether the handset is already communicating with (connected to) it. If the handset

is already connected to the Base Station (step 202, "Y"), the Base Station tries to connect the call to the handset. A timeout is set (step 203), again on the order of up to 5 seconds, and the Base Station waits (step 204).

If a time-out occurs (step 204, "Y"), or if a timeout does not occur (step 204, "N") but the call was unable to connect (step 205, "N"), the destination Base Station returns an indication (step 208) of call setup failure ("unable to connect") to the originating Base Station (or to the Switch, as the case may be). If, however, the connection succeeds (step 205, "Y") the Base Station returns an indication (step 206) of successful call setup ("call connected") to the originating Base Station. In either case (call connected, unable to connect), the destination Base Station sends similar indications (steps 211, 212, respectively) to all the neighboring Base Stations of the originating Base Station Again, sending the reply to the neighboring Base Stations is to overcome uncertainties during handoff. In both cases the Switch is updated at steps 207 and 209, respectively. Finally the Base Station waits (step 210) for a new event (a new call setup).

FIG. 7 illustrates the call setup procedure performed at the Switch (e.g., 129). The Switch handles two types of messages, one is a request to establish a new call, and the other is an update to the status of the call. In a step 231, it is determined whether the request is for a new call (step 231, "Y") or a request to update a call (step 231, "N").

If the arriving message is a request to update a call (step 231, "N"), an update of the "Calls Table" is generally required (step 254, "Y"). The Switch checks if it receives indication that the call is connected (step 255). If the call is connected, (step 255, "Y"), the status of the call is updated in the Calls Table (step 256). Otherwise (step 255, "N"), the call is removed from the Calls Table (step 257).

If the arriving message is a request to initiate a new call (step 231, "Y"), the Switch checks if the call is intended to a handset connected to the WPBX (step 232). This is done by checking its "Connections Table". If the call is intended to connect to outside the WPBX (e.g., via the PSTN 136), the Switch checks (step 233) if the destination number (DN) is a legal (valid) number. If the DN is a valid number (step 233, "Y"), in a step 234 the Switch transfers the call to the Gateway (e.g., 135), sets a timeout (step 235) and waits (step 236). If not (step 233, "N"), the program exits.

If the connection via the Gateway succeeds (step 236, "N"), it is whether the call is connected determined (step 237). If the call is connected, (step 237, "Y"), the Switch requests from the originating Base Station to transfer the call to the Switch(step 238), and waits for connection with originating Base Station (steps 239, 240). If connection succeeds, and the call is connected (step 242, "Y"), the call is added to the "Calls Table" (step 243), and the call is routed to the Gateway (step 244). If connection fails (step 240, "Y"; or step 242, "N"), the connection with the Gateway is disconnected (step 241).

If the call destination is one of the Base Stations (step 259), its source may be another Base Station (step 249), or the Gateway (step 245). If the source is another Base Station, the Switch send to the originating Base Station the address of the destination Base Station, and adds the call to the "Calls Table". If the call arrived from the Gateway the Switch tries to connect the call to the destination Base Station (step 245). If is succeeds the call is added to the "Calls Table" (step 252), the call is transferred to the destination (step 253). If it fails the connection with the Gateway is disconnected.

The procedure described in FIG. 7 is also applicable to the case when more than one Gateway connects to the WPBX to the PSTN--for example, in a case where two branch offices share a single WPBX, and each has its own independent connection to the PSTN. The main difference would be that when the Switch handles an outgoing call, it will determine to which Gateway to send the call. This can either be done randomly, or can be pre-determined. The handling of the incoming calls would proceed as set forth above in FIG. 7.

FIGS. 5, 6 and 7 have illustrated a call setup procedure for the handling of a single call. When either the Base Stations or the Switch need to handle more then one call, several instances of these procedures can be run in parallel. For that purpose, both Base Station software and Switch software are preferably based on a real time operating system that supports multi-tasking. For each new call, a new task will be created, and the task will perform the procedures described in FIGS. 5, 6 and 7. The task will be closed when the procedure is completed.

In systems with a very large number of Base Stations, due to limited processing power of each Switch, it may be preferable to divide the Switch into two or more units. Dividing the Switch into several units can also improve the reliability of the WPBX, by eliminating the possibility of having a single point of failure shutting down the entire system.

FIG. 22 illustrates the division of the Base Stations, into two groups; a first group (Group A) 1050 comprising a plurality (four shown) of Base Stations 1050a, 1050b, 1050c and 1050d; and a second group (Group B) 1051 comprising a plurality (four shown) of Base Stations 1051 a, 1051b, 1051c, 1051d. The Base Stations of Group A are connected to a first Switch (Switch A) 1052, and the Base Stations of Group B are connected to a second Switch (Switch B) 1053. The Base Stations and the Switches function according to the procedures described in FIGS. 5, 6 and 7. All the Switches mirror all the status tables of the other Switches, i.e. by having copies of each other's "Calls Table" and "Connections Table". When a Switch updates one of its status tables, it sends the information to all the other Switches, and they update their tables accordingly. In order for this process to be reliable, the other Switches will send an indication that the message was received. If the originating Switch does not receive such a reply within T.sub.1 milliseconds, it will retransmit the message. The retransmission will be repeated up to P times. For example T.sub.1 shall be equal to 100, and P shall be equal to 5.

It is within the scope of the invention that more than two Switches, and corresponding more

than two groups of Base Stations can be employed. As described hereinabove, all of the Switches would mirror and update each other's status tables. The description of two Switches 1052 and 1053 is intended to be exemplary rather than limiting.

Calls Table

The Switch (129) maintains the "Calls Table", which contains the status and information about all the active calls being handled by the WPBX. The "Calls Table" comprises the following information:

1) Each active call has a unique "Call Identification number".

2) The origin of the call, which can be either "Internal" or "External".

3) The destination of the call, which can be either "Internal" or "External".

4) "Calling Number Identification (CNID)", the number of the calling party, if available.

5) Destination Number (DN), the number of the answering party if available.

6) "Originating Base Station Identification" for calls from internal origin

7) "Destination Base Station Identification" for calls with internal destination,

8) Status of call--initiated, connected, disconnected.

9) Additional information for billing, performance analysis, such as call starts time, number of handoffs, time since last handoff, etc.

The "Originating Base Station Identification" and the "Destination Base Station Identification" are updated when a handset moves from one Base Station to another. The Switch updates these fields when it determines that the handoff should occur. During handoff, for a short time, there may be uncertainty about the validity of these fields. The Base Stations compensate for the uncertainty by "multicasting" the call setup messages to a group of Base Stations, as described hereinabove with respect to FIGS. 5 and 6 (see, e.g., steps 180, 181, 211, 212).

The procedures described above do not limit the WPBX from handling all unique telephony features that the Gateway and the handsets can support. For example, multiple connections can be created between handsets, and between handsets and the Gateway, when each connection is treated as a separate call. Another example is "Caller ID", that the Gateway can send to a handset. Another example is a "Hook-Flash" (momentary disconnect) that the handset can pass to the Gateway. The WPBX acts as a transparent relay for all these telephony features.

High-Level and Low-Level Protocols

In the descriptions set forth hereinabove, it has generally been assumed that:

1. Each Base Station knows which handsets are in its coverage range.

2. The Switch is aware of the connections of all the Base Stations.

3. Connections appear static to users and also to the high-level call setup procedures described above.

A method to achieve mobility, which fulfills these three assumptions is described in detail, hereinbelow.

According to the invention, the short-range communication protocol stack is divided into two parts:

low-level protocols performing real time tasks, and

high-level protocols that do not have real time requirements.

For example in the Bluetooth short-range communication protocol stack, the low-level protocols are the radio frequency (RF) transmitter and the base-band controller. The base-band controller performs real time control over the RF, since the Bluetooth protocol utilizes frequency-hopping transmission. The base-band protocol also determines, for each time slot of transmission (i.e. each frequency hop), what information will be transmitted. The base-band protocol also deals with voice coding, error correction, encryption and

authentication. For example, higher level protocols of the Bluetooth stack include the "Link Manager" which determines what information will go through the channels created by the "Base-Band", and determines the state of operation (e.g. Active, Polling, Parked).

The low-level protocols that require real time capabilities are performed in the Base Station. The higher-level protocols are performed at the Switch. (However, as described hereinbelow, certain high-level protocols can also be performed in the Base Station, even though they do not require real time capabilities.) The Switch handles the routing of data from the higher-level protocols to the lower level protocols. (A call routing task (282) is described in greater detail hereinbelow.) Therefore, the higher-level protocols do not need to "know" in which Base Station the lower level protocol that they are controlling is being performed.

FIGS. 8A and 8B illustrate an example of a WPBX system 800 with two handsets 121 and 133, two Base Stations 123 and 124, and one Switch 129. In this example, two calls are being handled. Gateways (e.g., 135, 137) are omitted, for illustrative clarity. As mentioned hereinabove (see, e.g., FIG. 22), the Switch can be divided into several units.

As illustrated in FIG. 8A, the handset 121 is currently communicating with (connected to) the Base Station 123, and the handset 133 is currently communicating with the Base Station 124. An instance 280 of the low-level protocol is running on the Base Station 123, and another instance 281 of

the low-level protocol is running on the Base Station 124. Each instance of the low-level protocol supports only one call. In a similar manner, the Switch 129 handles an instance 283 of the high-level protocol for the call with the with the handset 121, and another instance 284 of the high-level protocol for the call with the handset 133. A single call routing task 282 handles the data that is transferred between the instances of the low-level protocols and the high-level protocols to the correct destination.

As illustrated in FIG. 8A, the call routing task 282 routes data arriving from instance 280 of the low-level protocol to instance 283 of the high-level protocol, and from the instance 281 of the low-level protocol to the instance 284 of the high-level protocol. Since interaction between the high-level-protocol and low-level protocol, is normally relatively rare (e.g. call setup), there are no strict real time requirements from the call routing task. The call routing task 282 is described in greater detail hereinbelow, with respect to FIG. 12.

As illustrated in FIG. 8B, the handset 133 is shown as having moved to the area covered by the Base Station 123. The Base Station 123 will handle the communication with the handset 133, by creating a copy 281' of the instance 281 of the low-level protocol, that previously ran on Base Station 124. This allows the handset 133 to continue communication without "knowing" that a changeover of Base Stations has occurred. The call routing task 282 will now route the data arriving from the instance 281' of the low-level protocol running on Base Station 123 to the instance 284 of the high-

level protocol 284 which is running on the Switch 129.

For each connection of a Base Station with a handset, there is a separate instance of the low-level protocol running at a Base Station connected to the handset, and a corresponding separate instance of the high-level protocol running at the Switch. These instances are created, on an as-needed basis, when a connection is initiated. Preferably, a real time multi-tasking operating system is used in order to allow handling of many instances of the protocols simultaneously in the Base Stations and in the Switch. The procedures that the Switch uses during initiation of a connection and later, during handoff, are discussed in greater detail hereinbelow.

Synchronization of Base Stations During a Handoff

There follows a description of procedures that are performed during handoff of a call from one Base Station to another Base Station. The Base Station with which a handset is currently connected is termed the "current" Base Station. The Base Station to which a handset is being handed off is termed the "next" Base Station, and is typically a "neighboring" Base Station. Once the handoff has occurred, this neighboring/next Base Station becomes the "current" Base Station and the Base Station from which the handset has moved becomes the "previous" Base Station.

According to an aspect of the invention, the handsets do not need to be (and preferably are not) specially equipped or enabled to support mobility (i.e. handoff). Therefore, when a handset moves from

one Base Station to another, the current and the next Base Stations are responsible for continuing the communication with the handset, preferably with no noticeable interruption in the communication, and the next Base Station to which the handset has moved should transmit substantially exactly as the previous Base Station from which the handset has moved would have transmitted. For purposes of the discussion of this example, it is assumed that it is known from which Base Station the handset has moved and to which Base Station the handset is moving, and that the exact timing of handoff is also known. These issues are discussed in greater detail hereinbelow.

FIGS. 9A, 9B and 9C illustrate, in a general manner, a handoff taking place between two Base Stations 123, 124 and a single handset 121 of a WPBX.

FIG. 9A illustrates the handset 121 communicating with (connected to) a Base Station (Base Station #1) 123 via a short-range communication link 122 (e.g. Bluetooth wireless link). The "current" Base Station 123 sends call parameters and rough synchronization information over the LAN 140 to the neighboring Base Stations, a one of which is shown as Base Station #2 124. In this manner, the neighboring Base Stations "know" that they are "candidate" Base Stations for receiving a handoff of the call from the current Base Station. The information which is broadcast by the current Base Station to the candidate next Base Stations includes low-level communications protocol states and parameters, discussed in greater detail

hereinbelow. This communication from the Base Station 123 to the Base Stations 124 is indicated by the arrow 141, and the information contained therein is used to achieve rough (coarse) synchronization between the Base Stations. Since this information does not need to be accurate in time, it can be transmitted over the data link (e.g., LAN 140) connecting all of the Base Stations.

FIG. 9B illustrates a handoff as it is about to take place. Here, the handset 121 is situated in an area covered by both Base Stations 123 and 124. Base Station 124 uses this situation to achieve exact (fine) synchronization with the current Base Station 123. This will enable the next Base Station 124 to transmit, after the handoff, substantially exactly as previous Base Station 123 would have transmitted if the handoff had not occurred. A method for effecting this fine synchronization between neighboring Base Stations is discussed in greater detail hereinbelow.

An important parameter of synchronization is Time Of Day (TOD), which can be determined with virtually any desired level of precision (e.g., microseconds). As described in greater detail hereinbelow, in order to achieve fine synchronization of TOD, the Base Station 124 that is waiting for the handset 121 may passively monitor the transmissions of either the handset 121, or of the Base Station 123 that is currently connected with the handset. In FIG. 9B, the two possible fine synchronization signals that the candidate next Base Station #2 124 can monitor are shown, a signal 142 originating from the Base Station #1 123, and another signal 143 originating from the handset 121.

FIG. 9C illustrates that synchronization of the Base Stations 123 and 124 may alternatively be achieved by use of a beacon signal from a beacon transmitter 299 which is within range of current and next Base Stations, in which case precise (fine) synchronization for the low-level protocols can also be achieved. The beacon transmitter 299 transmits a beacon signal 144 to both of the Base Stations 123 and 124 to achieve synchronization of the Base Stations. This method allows for the synchronization of many Base Stations, although only two are illustrated in this figure. In this case, there is no need to transmit synchronization information over the LAN 140. Only call parameters (e.g., low-level protocol) need to be communicated between the current Base Station and The neighboring candidate next Base Stations, as indicated by the arrow 141'.

Bluetooth Short-Range Wireless Communication Protocol

As discussed hereinabove, a short-range communication protocol with the handset can be divided into lower-level protocols which the Base Stations handle, since they have real time requirements, and higher-level protocols which the Switch handles since they do not require real time requirements. Bluetooth wireless technology is an example of such a short-range communication protocol. In Table 1, a division of the Bluetooth short range wireless protocol into such low-level and high-level protocols is presented.

TABLE 1

Communication Protocols

Element (Protocol Name	Description of Protocol (Bluetooth Protocol)	Real time requirements	Level/ Where
Radio Frequency (RF)	Defines the modulation scheme and the frequency range	Control of radio frequency in real time required, modulates each symbol	Low/ Base Station
Base-band	Frequency control, channel definition, transmission/ reception control, encryption, error correction, authentication	Control frequency hopping in real time. Determines what packets will be sent at each hop. Encryption/ Error correction for each hop. Accurate time synchroni-zation	Low/ Base Statio n

Link manager	Link setup and control	None	Low or High Base station or Switch
Host Controller Interface	Communication between protocol stack and lower level implementation	None	Low or High Base station or Switch
Logical link manager	High level protocol multiplexing, packet segmentation and Reassembly, quality of service management	None	High/ Switch
Service discovery	Locating a service available by a Bluetooth device	None	High/ Switch
RE COMM	A subset of the ETSI TS 07.10 standard, emulation of serial port over the Logical link manager	None	High/ Switch

Ird Interoperability	Interoperability for applications over Bluetooth and infra-red protocols	None	High/ Switch
Telephony control protocol	Call control signaling and establishing of speech and data calls between Bluetooth devices	none	High/ Switch
Interoperability requirements for Bluetooth technology as WAP bearer	Bluetooth protocol with PPP as communication bearer for WAP	none	High/ Switch
Host control Interface	Command interface to the baseband controller and link manager, and access to status information	none	High/ Switch
Generic Access Protocol	Generic procedures for Discovery of services and connection of Bluetooth devices	none	High/ Switch

Service discovery application profile	Procedures for an application in a Bluetooth device to discover the services in other Bluetooth devices	none	High/ Switch
Cordless Telephony Profile	Procedures in an all in one handset	none	High/ Switch
Intercom Profile	Support for intercom feature in an all in one handset	none	High/ Switch
Serial Port Profile	Procedure for emulation of serial cable	none	High/ Switch
Headset Profile	Headset use over Bluetooth wireless link	none	High/ Switch
Dial up Networking Profile	Support for dial up networking in a device with Bluetooth wireless technology	none	High/ Switch
FAX Profile	Support for fax transmission or reception on a device with Bluetooth wireless technology	none	High/ Switch

LAN Access Profile	Defines how device with Bluetooth wireless technology can access a LAN with PPP	none	High/ Switch
Generic Object Exchange Profile	Defines the possibility of Generic Object Exchange	none	High/ Switch
Object Push Profile	Support for object push model	none	High/ Switch
File Transfer Profile	Support for file transfer	none	High/ Switch
Synchronization Profile	Synchronization of Bluetooth enabled device, e.g. PDAs Laptops	none	High/ Switch

Table 1 shows the elements of the Bluetooth protocol, generally, as currently implemented. Other profiles may be added in the future (or may have already been added), and it is anticipated that these profiles will be high-level protocols, which do not have strict real time requirements.

As shown in Table 1, the Link Manager and the Host Controller Interface can be implemented in either the Base Station or in the Switch. Although the Link Manager and Host Controller Interface, do not require real time performance, they may readily be implemented in the base-band controller of the

Base-Station. It is within the scope of the invention that any of the high-level protocols can also be implemented in the Base Station as part of the low-level protocol, but then they will take part in the handoff.

According to the inventive technique of dividing the low-level and high-level protocols, the high-level protocols are "buffered" from the occurrence of handoff by the Base Stations and the routing task that runs on the Switch. Therefore, the present invention allows mobility of any device with Bluetooth wireless technology that supports any of the high-level protocols (e.g. LAN access, WAP, FAX, FTP). The solution for mobility of cordless phones, described hereinabove, is only an example of how the methods can be utilized.

As described hereinabove with respect to FIGS. 8A and 8B, different instances of the low-level protocols that represent the same connection (e.g., 281, 281') need to be synchronized. Table 2, presents elements (parameters) of the low-level protocols that the Base Stations will synchronize. For each element, it also shows whether rough or fine synchronization is required. Again, the protocols are described, by way of example, in the context of the Bluetooth short-range communication protocol.

Rough synchronization may be achieved via the local area network (see, e.g., LAN 140, FIGS. 9A and 9B) connecting the Base Stations. Fine synchronization may be achieved by other methods described in greater detail hereinbelow.

TABLE 2

Low-Level Protocol Synchronization

Element/ Parameter	Description	Synchronization method
device address	The unique address of the Base Station, determines the hopping sequence, effects the encryption and authentication keys.	Via LAN
TOD	Time Of Day, measured in micro-seconds, it determines the exact timing of the hopping sequence	Rough synchronization via LAN, fine synchronization by other methods
SCO	Synchronous voice channels allocation	Via LAN
FEC	Forward error correction parameters	Via LAN
Encryption key	Used to encrypt data and voice	Via LAN
Authentication key	Used to initiate a connection	Via LAN
Voice coding	Method of voice coding: CVSD or PCM	Via LAN
AM_ADDR	Address of member in a picocell	Via LAN

PM_ADDR	Address of a paired handset (energy saving mode, when the handset is inactive)	Via LAN
ACL	Definition of the asynchronous data link	Via LAN
FIFO	Data FIFOs	Flush of data, and using flow control to halt data during handoff

All the parameters listed in Table 2, except for the TOD, can be sent prior to handoff, thorough the local area network (e.g., LAN 140), or any other communication link connecting the Base Stations. As described hereinabove with respect to FIG. 9A, rough (coarse) TOD can also be sent through the LAN.

If one of the other parts of the Bluetooth protocol stack is also implemented in the Base Station, then it will also take part in the handoff. Synchronizing the instances of the same protocols in different Base Stations is done as described above, by sending internal state parameters via the local area network (LAN 140). For example, by implementing the Link Manager and Host Controller Interface in the Base Station, the internal state parameters of these protocols will be broadcast to the neighboring Base Stations, by the Base Station that is connected to the handset.

Fine Synchronization

As mentioned hereinabove, in order to achieve fine synchronization of TOD, the Base Station that is waiting for the handset, should passively monitor the transmission of the handset and/or the Base Station that is currently connected with the handset. In FIG. 9B, the two possible signals that the receiving (next) Base Station 124 can monitor are shown, one originating from Base Station 123, and the other originating from the handset 121 which is currently connected to the Base Station 123.

According to the invention, the next Base Station 124 can be finely synchronized by receiving synchronization signals from the current Base Station 123. Normally, the Base Station 124 does not receive signals from the Base Station 123. Therefore, to facilitate the Base Station 124 receiving synchronization signals from the Base Station 123, Base Station 123 periodically transmits with higher transmission power than during normal transmission. This allows the Base Station 124 to receive transmissions from Base Station 123, without a substantial increase in spectral contamination. The inventive technique is described in the context of frequency-hopping. Frequency-hopping techniques are well known, including techniques that change frequency with each hop.

FIG. 10 illustrates a technique for controlling the transmission power of a Base Station (e.g., 123) that is currently connected with the handset, for a plurality (series) of successive hops 290. The vertical axis of the graph is the Base Station's transmission

power (in arbitrary units), and the horizontal axis is time. T.sub.h is the duration of a hop 290. In this example, the hops 290 all have equal duration. T.sub.p is the time interval between successive hops (or "hop time slot") and, in this example, the intervals between successive hops are constant (evenly spaced in time). The normal transmission power for each hop 290 is P.sub.0. For example, in a short-range communication system, the normal transmission power P.sub.0 of a Base Station is suitably on the order of a hundreds of milliwatts.

According to the invention, in order to effect synchronization between a Base Station and its neighboring Base Stations, every Kth hop 290' is a "synchronization" hop that is transmitted with increased power P.sub.1. P.sub.1 is suitably substantially (e.g., 2-10 times) greater than P.sub.0. In the case that the transmitter changes the transmission frequency in each hop, every Kth (synchronization) hop will also be transmitted at a different frequency.

Alternatively, it is within the scope of the invention that a variable time interval (Tp) is provided between the synchronization hops 290' that are transmitted with high power P.sub.1. For example a changing K (that shall be denoted by K(n), i.e. K for hop number `n`), can be generated by a pseudo random sequence such as a maximal length shift register sequence. Pseudo random sequences are well known for use in communication systems.

In the case that a beacon transmitter (e.g., 299) is used (in addition to signals received from the

Base Station and handset) to synchronize the Base Stations (see, e.g., FIG. 9C), it can suitably transmit the beacon signal once in K hops, and K can either be constant or it can be changed over time (variable), as described above.

Low-Level Synchronization at the Base Station

FIG. 11 illustrates major components of a Base Station 1100 waiting for handoff, and a method of accurately synchronizing the TOD at the Base Station to the TOD of the Base Station which the handset is about to leave, including:

Time Clock 310;

TOD counter 303;

Antenna 301;

Receiver 305;

Frequency Hopping Generator 304;

Emulator 307;

Correlation Detector 308; and

Adder (ADD) 309;

all connected as illustrated in the figure and as discussed hereinbelow.

As described hereinabove with respect to FIG. 9A, a rough TOD from the Base Station currently

connected with the handset is available to the (next) Base Station waiting for a handoff on a communication link such as the LAN 140. This rough TOD is provided to the TOD counter 303 (e.g., via an interface to the LAN 140). A Time Clock 310 generates clock signals for incrementing the TOD counter 303. The output of the TOD counter 303 is therefore a rough estimate of the TOD ("TOD Estimate"). There is an uncertainty (margin of error) "Tu" between the rough estimate of TOD and the actual TOD, and which depends on the transmission latencies thorough the LAN 140. "Tu" is readily calculated for a given WPBX system, according to its physical configuration.

From the rough estimate of the TOD output by the TOD counter and the device address ("Commonly denoted by Media Access Control Address, or MAC address",), a frequency-hopping list is generated by a frequency-hopping generator 304 and supplied to an emulator 307 which emulates the output of the receiver 305. In a window with size of 2OT.sub.u, a single frequency from the hopping sequence is chosen, and the receiver 305 will wait on this frequency for duration of 2-T.sub.u. Once in a period of 2-T.sub.u, the receiver 305 will switch frequency, in response to a signal generated by the frequency-hopping generator 304. Opening an acquisition window of 2-T.sub.u ensures that during this time duration the receiver 305 will capture at least one hop. A correlator/detector 308 receives the receiver's output (e.g. a base-band or intermediate frequency signal) and an emulation 307 of the signal that should appear at the receiver's output. The output of the receiver 305 can be emulated, since a

rough estimate of the TOD is available, and also from the hopping frequency list, and the receiver frequency list. The emulator 307 continuously checks for a match between receiver frequency and the hopping frequency and, when it finds a match, it reports the frequency and the time (rough TOD) to the correlator/detector 308. By comparing the actual received signal with the emulation that is based on the rough TOD, the correlator 308 computes (and outputs) a fine estimate of the TOD offset (i.e., the error between the TOD estimate and the actual TOD), and provides this to Adder 309, which also receives the rough TOD estimate from the TOD counter 303 and generates a signal ("Fine TOD") indicative of the actual TOD. Correlator-based time offset measurement is a standard estimation method that is described in many textbooks, and an example of its implementation is described in greater detail hereinbelow.

Since the Base Station to which the call is to be handed "knows" which call it is going to receive, and it has received the call parameter (via the LAN), and is able to accurately estimate the TOD, it will be able to perform a seamless handoff, transmitting substantially exactly as the Base Station that the handset is about to leave. As mentioned above, an iteration of the low-level protocol (e.g., 281') can be prepared at the receiving Base Station in anticipation of the handoff.

Call Routing Task (282)

The higher-level protocols are run at the Switch, and are therefore "ignorant" of the handoff

processes. At the Switch the "call routing task" 282 (FIGS. 8A, 8B) isolates the high-level protocols from the changing environment. The "call routing task" 282 maintains the "Connections Table", which contains information about all the connections between handsets and Base Stations. Maintaining the Connections Table is described in greater detail hereinbelow. The following sections describe an example of how the Connections Table is used by the "call routing task" 282.

The following information is included in the Connections Table:

1) Handset ID

2) Current Base Station ID

3) Handle (of instance) of high-level protocols

4) Handle (of instance) of low-level protocols

5) Number of candidate Base Stations for handoff

6) List of candidate Base Stations for handoff

7) List of Handoff status for each candidate Base Station (i.e., Idle/Started)

The messages that the high-level protocol (that runs on the Switch) and the low-level protocol (that runs on the Base Station), send each other have the following format:

1) Message Header

Origin:

from low-level protocol

from high-level protocol

Handset ID

Base Station ID

Low-Level Protocol Handle in the Base Station (number of instance of low-level protocol)

High-Level Protocol Handle in the Switch, (number of instance of high-level protocol)

HEC (header error correction)

2) Message Data

3) CRC (Cyclic Redundancy Check)

FIG. 12 illustrates a method of implementing the "call routing task" 282 which was mentioned hereinabove with respect to FIG. 9A. The "call routing task" 282 is performed in the Switch 129.

In a first step 351, the call routing task 282 waits for a message from one of the high-level protocol instances running on the Switch 129 or from one of the low-level protocol instances running on the Base Stations (e.g., 123). Then, in a step 352, it is determined where the call came from.

If the message arrived from one of the Base Stations (step 352, "Y"), the call parameters are compared with the Connections Table (step 353) and the message is sent (step 354) to the instance of the high-level protocol running on the Switch (129).

If the message arrived from the Switch (step 352, "N") the ID of the sending low-level protocol instance is located (step 353) in the "Connections Table", and the message is sent (step 354) to an instance of a corresponding high-level protocol. If the message arrived from one of the high-level protocols (step 352, "N"), it is determined (step 360) whether a handoff has begun (is in progress). If a handoff is not in progress (step 360, "N"), the call parameters are compared with the Connections Table (step 358) and the message is sent to the Base Station on which the destination low-level protocol instance is running (step 359). If a handoff is in progress (step 360, "Y") the call parameters are compared with the Connections Table (step 355) and the message is sent to the Base Station on which the destination low-level protocol instance is running (step 356). The message is also sent (step 357) to all the Base Stations that are candidates for handoff--e.g., neighboring Base Stations. The Base Stations receiving the message can then check if they are running the destination low-level protocol and, if not, the message is simply discarded. The procedure shown in FIG. 12 handles a single message. By using a multi-tasking operating system, it is possible to run several instances of these procedures, and thus handle more than one message simultaneously.

Detecting a Handset

The methods described thus far enable the communication protocols to continue operation when a handoff occurs. They rely on the ability to determine, which handset is in the coverage area of which Base Station, where a handset is moving, and when is the best time to perform handoff. By definition, handoff occurs between only two Base Stations, but for a certain time prior to the actual occurrence of the handoff there may be more than one Base Station that are candidates for handoff. Determining the candidates for handoff, which Base Station will actually participate in handoff and when to perform handoff requires collaboration of the Base Stations and the Switch.

As is evident from the discussions hereinabove, the handsets do not actively participate in the handoff operations. Therefore, the Base Stations will determine which handsets are in their coverage range, by either passively capturing transmission information, or by "tricking" the handset to transmit information that can be used for that purpose.

As discussed hereinabove, each Base Station will transmit, to all the neighboring Base Stations, information about the calls that are taking place in its coverage area. This information will include all the call parameters that can be sent through a low bandwidth communication link, such as the shared local area network (e.g., LAN 140). This information is sufficient for detecting which handset is moving

from one of the neighboring Base Stations into the coverage area of a Base Station.

FIG. 13 illustrates major components of a Base Station 1300, waiting for handoff, and a method of accurately synchronizing the TOD at the Base Station to the TOD of the Base Station, which the handset is about to leave, and a passive method for detecting the arrival of a handset in a Base Station's coverage area during a call, including:

Three TOD counters 371, 380 and 384 (compare 303)

Antenna 382 (compare 301);

Receiver 379 (compare 305);

A Receiver Frequency Controller 375;

Three Hopping Sequence Generators 372, 373 and 374;

Three Emulators 376, 377 and 378;

Three Correlators 381, 382 and 383 (compare 308), all connected as illustrated in the figure and as discussed hereinbelow.

FIG. 13 illustrates a passive method for determining which handsets' (i.e. handset which is participating in a call with a certain device address) transmissions is being received by a Base Station.

A plurality ("K", three shown) of TOD counters 371, 380 and 384 are set when a rough TOD ("Rough TOD") estimate is received, via the LAN (140), from other Base Stations. The counters 371, 380 and 384 are incremented by the TOD clock 310. Using the TOD and the device addresses ("Bluetooth Device Address") that are connected to calls in which handsets in the neighboring cells (connected to neighboring Base Stations) participates, a corresponding plurality ("K", three shown) of hopping frequency (sequence) generators 372, 373, 374 generate the list of frequencies in which the handsets are likely to transmit.

The receiver frequency controller 375 sets the frequency, which the receiver 379 will monitor. A plurality ("K", three shown) of correlators 381, 382 and 383 is used to compare the energy at the receiver's output, to the emulation of the receiver's output. The output of the receiver can be emulated, since a rough estimate of the TOD is available, as well as the hopping frequency list, and the receiver frequency list. The emulator continuously checks for a match between receiver frequency and the hopping frequency, when it finds the match it reports to the correlator the frequency and the time. By comparing the actual received signal with the emulation that is based on the rough TOD, the correlator detect the presence of the transmitter and computes a fine estimate of the TOD offset (i.e., the error between the rough TOD estimate and the actual TOD). Correlator-based time offset measurement is a standard estimation method that is described in many textbooks, example of implementation shall be described later on. The number of handsets that can

be detected simultaneously is equal to the number of hopping sequence generators, and the number of emulators of receiver output, and the number of correlators.

In FIG. 13 up to `K` handsets can simultaneously be detected. The main advantage of the method described above is that since the detection is passive, there is no need to achieve fine synchronization between Base Stations. Another advantage of this passive method is that there is no need to decode the messages that the handset transmits, and therefore it is relatively easy to implement.

The receiver frequency controller 375 selects the frequency on which the receiver 379 will wait to "capture" hops. To increase the probability of detection, the receiver frequency controller 375 should be programmed to choose frequencies that are not blocked by interferences (e.g., interferences from other than Bluetooth transmitters). For each frequency that the receiver frequency controller 375 chooses, a histogram of the number of hops that have been detected in a certain duration of time, and their average signal-to-noise ratios are maintained by the receiver frequency controller 375. A measure of the spectral "cleanness" of a certain frequency can be determined as a function of the signal-to-noise ratios (SNRs) of the hops--for example, as the number of hops multiplied by the average signal-to-noise ratios (SNRs) of the hops.

The receiver frequency controller 375 preferably chooses a group of `M` frequencies that

have the best "cleanness" measure, and the receiver 379 waits on them most of the time, when once in T1 milliseconds the controller changes the frequency. Once in T2 milliseconds (T2 is selected to be much larger then T1) the receiver frequency controller 375 selects a frequency which is not in the group of `M` best, and the receiver 379 waits on it for T3 milliseconds (T3 is selected to be smaller then T1). This enables the receiver frequency controller 375 to monitor the "cleanness" of frequencies that are not in the `M` best frequencies. If the receiver frequency controller 375 detects a frequency that is cleaner then one of the `M` frequencies that is in its list, it puts it in the list, instead of the frequency with the lowest "cleanness" measure. Typical values for the parameters M, T1, T2, T3 are 20, 250, 2500, 100, respectively.

Generally, the signal-to-noise ratio (SNR) or signal-to-interference ratio for each hop is measured by measuring the bursts of energy which match the expected hop duration, to all other signals that do not match the hop duration. The average noise level is continuously monitored. When the energy increases for duration ranging from Th-D to Th+D (Th is the nominal hop duration; D is a measurement "window" interval), the hop energy will be computed, and it will be added to the average hop energy. During the duration of the hop the average noise level is not be updated. Typical values for Th and D, are 0.65 milliseconds, and 1000 milliseconds respectively.

Another Method of Detecting a Handset

An alternative method for detecting a handset which enters the coverage area of a Base Station, is now described. This method is also passive, and also relies on a handset being engaged in a call in order to detect the handset. This method requires fine synchronization between the Base Stations and therefore is somewhat more complicated than the passive method previously described, but using this method has a few substantial advantages over the method previously described, including:

improved detection performance,

improved timing of handoff, and

the ability to detect a moving handset that is not currently participating in a call.

According to the invention, once in a while the Base Station that is currently communicating with the handset will "give up" (omit, yield to its neighbors) a short transmission duration, during which one or more neighboring Base Stations may transmit to the handset. In order for the handset to receive their transmission, the neighboring Base Station(s) must therefore be synchronized with the Base Station that is currently communicating with the handset, and during the time that the neighboring Base Station(s) transmits, it (they) acts as if it were the Base Station that has yielded a transmission slot for handset detection by the neighboring Base Stations.

This method can be illustrated in the context of the Bluetooth short-range communication, wherein frequency hopping is used. The Base Station that is currently communicating with the handset, will give up a single hop. Any of the neighboring Base Stations that are not close to each other may use the same hop to transmit to the handset. The neighboring Base Stations that are close to each other will use different hops to call (communicate with) the handset. This is illustrated in FIGS. 14A, 14B, 14C and 14D.

FIG. 14A, which is similar to FIG. 1, illustrates a wireless communication system 1400 (e.g., WPBX) having a Base Station 391 that is currently communicating with a mobile unit 390 that is a wireless telephone handset, and a plurality (six shown) of neighboring Base Stations 392, 393, 394, 395, 396 and 397 that are waiting (available) for the handset 390 to enter their coverage areas. Each Base Station 391, 392, 393, 394, 395, 396 and 397 has an area of coverage 391a, 392a, 393a, 394a, 395a, 396a and 397a, respectively. The interconnections between the Base Stations, and between the Base Stations and a central Switch, such as shown in FIGS. 2 and 4, are omitted, for illustrative clarity.

FIG. 14B, which is similar to FIG. 10, illustrates that the Base Station 391 which is currently communicating with the handset 390, periodically (once in K hops) transmits with higher power P.sub.1, in order to enable the neighboring Base Stations to synchronize their TOD. According to the handset detection technique being discussed,

the Base Station 391 also periodically (once in M hops) skips a transmission on a single hop 702, 703 (shown as dashed lines) in order to allow the neighboring Base Stations 392, 393, 394, 395, 396 and 397 to transmit at these times. As shown in FIG. 14C, three of the neighboring Base Stations 393, 395, 397 transmit on even-numbered skipped hops 705. As shown in FIG. 14D, the other three of the neighboring Base Stations 392, 394, 396 transmit on odd-numbered skipped hops 707. At other times (other than the hops 705, 707), the neighboring Base Stations 392, 393, 394, 395, 396 and 397 may transmit normally to other handsets (not shown) to which they are connected.

As described hereinabove, the Base Station that is communicating with the handset sends the call parameters to neighboring Base Stations via the local area network (LAN 140) that connects all of the Base Stations. It will also send information regarding the timing of hops that they may use to call handsets that it is communicating with. As described hereinabove with respect to FIG. 11, the neighboring Base Stations can synchronize the TOD. According to the timing of the hops received with high energy (P.sub.1), the Base Stations that wait for the call, can determine the times in which they are allowed to try to call the handset. In these times the Base Stations transmit to all handsets that are communicating with neighboring Base Stations.

Detecting Movement of a Handset

The two techniques for detecting a handset, described immediately hereinabove, are "passive" in

the sense that they do not require any actions to be taken by the handset, other than the initial action of being engaged in a call (connected to a Base Station). The technique described immediately hereinbelow is "active" in the sense that it requires some further participation (albeit minimal) from the handset. However, such a mechanism is standard in most wireless communication protocols, even in those that were not originally meant to support mobility (handoff). In either case ("passive" or "active"), it is important to recognize that the present invention can work with standard handsets, without modification thereto.

Although the handsets do not need to have a mechanism for supporting (actively participating in) handoff, they preferably have a mechanism that allows checking whether their communication links are operating normally. For example, in the Bluetooth short-range communication link, a "PING" command that is sent on the asynchronous link is used to check whether the data communication link is operative. When the handset receives a "PING" command it will automatically respond with an "ECHO" message (response). Since the "PING" command is sent on an asynchronous link, and not the synchronous link that is used for voice communication, in does not disrupt the voice quality, but only slightly (and temporarily) reduces the available bandwidth for data transfer.

The "PING" command includes the following data fields:

Device address

Identifier

Length

Data (optional)

The "ECHO" response includes the:

Identifier

Length

Data (optional)

In the Identifier, an identification of the originating Base Station is sent. Hence, when the handset replies it is possible for any Base Station receiving the "ECHO" reply to know which Base Station originated the reply.

The "PING" command and "ECHO" response are used by a Base Station in order to determine whether a certain handset has entered its coverage area. Unlike the methods of passively detecting the handset presence, discussed hereinabove, this method allows detection of a Base Station that was not actively engaged in a call at the time of handoff. It is enough for the handset to have only created an initial communication with a Base Station.

FIGS. 15A and 15B, illustrate the use of "PING" command and the "ECHO" response by the Base Station that is waiting for the call.

As shown in FIG. 15A, the handset 121 is currently communicating with the Base Station #1 123 via communications link 122. During this time, the Base Station #2 124 that is waiting for the call will periodically send a "PING" command 145 to the handset 121. When the handset 121 enters the coverage area (is in range) of the waiting Base Station 124, and when it receives a "PING" command with its address, it will reply with an "ECHO" response 146. The "ECHO" response 146 is also received by the Base Station #1 123.

The waiting Base Station #2 124 transmits the "PING" command 145 during the hops that the Base Station #1 123 has dedicated (yielded) for this operation, as described hereinabove (see, e.g., FIG. 14B, 702, 703). The "ECHO" reply 146 will be received by both Base Stations 123 and 124, whereupon the Base Stations 123 and 124 can each measure the quality of the received signal ("ECHO") and report the measurements to the Switch (e.g., 129; FIG. 2). Based on this measurement of the quality of the received signal, the Switch 129 can compare signal quality and decide when is the right time to perform the handoff, and implement the handoff procedures described hereinabove.

FIG. 15B illustrates an alternative, "active" method for detecting the handset 121. In this example, The Base Station #1 123 that is currently connected to the handset 121 transmits a "PING" command 147, once in M hops. The handset 121 replies with an "ECHO" response 146' for each "PING" command 147 it receives. When the handset 121 enters the coverage area of neighboring Base

Station #2 124, the neighboring Base Station #2 124 will receive the "ECHO" response 146' by monitoring each Mth hop, in order to receive the "ECHO" response of the handset 121 that is approaching it. When the neighboring Base Station #2 124 receives the "ECHO" response 146', it measures the quality of the received signal, and reports to the Switch 129. This method is different from the method previously described with respect to FIG. 15A in two aspects:

1) In the method of FIG. 15B, the Base Station 123 connected to the handset, does not skip each Mth hop, but rather transmits a "PING" to the handset

2) In the method of FIG. 15B, the neighboring Base Stations (e.g., 124) do not transmit "PING"s to the handset 121--rather, they only passively monitor each Mth hop.

The quality of each hop may be measured by many known methods, such as energy level measurement, signal-to-noise ratio (SNR) measurement, packet loss ratio and bit error rate measurement (BER) that can be performed on the header of each message.

Another Handset Detection Technique

Each Base Station maintains a "Neighbor Connections Table", which includes information about the connections between handsets and neighboring Base Stations. The "Neighbor Connections Table", includes the following information:

Connection number

Handset ID

Base Station ID

Handoff status: Idle/Started

Handset detection status

Number of successful "PING"

Time of last successful "PING"

Quality measurements in successful "PING"

FIG. 16A illustrates a technique (procedure) for detecting a handset that enters the coverage area of a Base Station when (as in the example of FIG. 15B) the Base Station that the handset is currently connected to generates the "PING" command that is sent to the handsets. All of the Base Stations (e.g., 391-397; FIG. 14A) preferably perform the same detection procedure, whether they the handset is connected with them or not.

When a hop is due (steps 400, 401), the even-numbered hops are used by the handset, and the Base Stations use the odd-numbered hops. In a step 402, a hop counter is incremented by one, and if (as determined in the step 403) it is the Kth hop, the Base Station will to try to send a "PING" to one of the handsets that are candidates for handoff. If it is not the Kth hop (step 403, "N"), the Base Station waits for the next hop (step 400).

As used herein, "NMAC" represents the address of the handset that will be called, and "NegTab" is an abbreviation of "Neighboring Connection Table".

If handoff has not started yet with any handset (step 404, "N"), all the handsets will be called in order. The pointer to the NegTab is incremented (step 405), and the address of the handset is retrieved from the NegTab (step 406). The Base Station then transmits a "PING" command with the address of the handset (step 407). When handoff has already started with one or more than one handsets, these handsets are "PING"ed more often than the others. The next item in the NegTab is checked (step 411) and, if handoff with it has already started, it will be "PINGED" (steps 412, 407). The handsets that have not started handoff, will be "PING"ed only once in K2 "PING"s (steps 410, 413, 414).

When an "ECHO" is received (step 420, "Y") and it is determined to be from a handset that communicates with a neighboring Base Station (step 419, "N"), it will be compared to all the entries in the "Neighbor Connections Table" (NegTab) 421,422. If it is found in the NegTab (step 422, "Y"), the quality of tbe hop is measured (step 423) and a record of the average quality in the previous hops is maintained in the "Neighbor Connections Table" (step 424). The following measurement parameters are sent to the Switch (step 425):

Base Station communicating with handset

Base Station originating "PING"

Base Station receiving "PING"

Identification of handset

Quality of received signal

FIG. 16B illustrates a procedure that a Base Station performs when it receives an "ECHO" response from one of the handsets that are connected to it (from FIG. 16A, step 419, "Y"). The "ECHO" response can be received either when the connected Base Station or one of its neighbors sends a "PING" message to the handset. (See, e.g., FIGS. 15A and 15B.) First, the Base Station checks to see if the "ECHO" reply was caused by itself, or by one of the neighboring Base Stations (steps 430, 431). This information is contained in the Identifier of the "ECHO" reply, as described hereinabove.

If the "ECHO" was caused by a neighboring Base Station (step 431, "Y"), the quality of the received signal is measured and averaged (step 432), and the measurement parameters are sent the Switch (step 433) to be used by the Switch in determining when to perform handoff. If the Base Station itself caused the "ECHO" reply (step 431, "N"), the task simply exits ("B").

FIGS. 16A and 16B illustrated the procedure of transmitting the "PING" from the Base Station that the handset is connected too, and detecting the arrival of a handset from a neighboring Base Station.

FIG. 23 illustrates a procedure for performed by the Base Station when reception or transmission of a hop is required (steps 1200, 1201). Once in K hops (step 1202), if the next time slot is for transmission (step 1203), the Base Stations sends a "PING" to one of the handsets that are connected to it. Tcount is incremented (step 1204), and the next handset that appears in the list of handsets (Connection Table, or "ConTab") that are connected to the Base Station is chosen (step 1205).

The "PING" is sent with the address taken from the ConTab (step 1206). When it is time to receive a hop, the receiver looks for an "ECHO" response (step 1207). If an "ECHO" is received, and it originator was a neighboring Base Station (step 1208), the parameters are compared to the NegTab (step 1209), and if it is found in the table (step 1214), the quality of the signal is measured (step 1210) and averaged (step 1211). If the "ECHO" response was to a "PING" command that originated from the same Base Station, the quality is measured (step 1213). In both cases the connection parameters and the quality are sent to the Switch (step 1212).

When an "ECHO" response is received (FIG. 16A, step 425; or FIG. 16B, step 433; or FIG. 23, step 1212), the following data is sent to the Switch:

Received quality

If from handset from neighbor Base Station, the average quality of the received "PINGS"

If from handset connected to same Base Station, the received quality that is monitored continuously, and also the average quality of the received "PINGS"

Base Station originating "PING"

Base Station receiving "ECHO"

Base Station currently connected to handset

Measurement TOD

Performing Handoff

Two methods for detecting that a handset moves from one Base Station to another have been described hereinabove. The first handset detection method (FIGS. 13, 14A, 14B, 14C, 14D) is based on passive monitoring of the handset. In the second handset detection method (FIGS. 15A, 15B, 16A, 16B) the handsets are actively "PING"ed, and their "ECHO" responses are noted. Using either one of these two methods, a Base Station that is connected to a handset continuously sends received quality measurements to the Switch and, when a neighboring Base Station detects a handset, a quality measurement is also sent by the neighboring Base Station to the Switch. A Base Station receiving an "ECHO" from one of the handsets that are connected to it (e.g., FIG. 15B), also sends the quality measurement to the Switch. The decision as to when to perform handoff, between one Base Station and another, is made at the Switch, which uses these signal quality measurements from the Base Stations to determine the time for and

destination of a handoff. FIG. 17A illustrates a method for making the handoff decision, when a passive detection method is used. FIG. 17B illustrates a method for making the handoff decision, when an active detection method is used.

FIG. 17A illustrates a procedure that is implemented at the Switch (129) in order to decide to which Base Station the handset should be handed. Energy measurements from two or more (three shown) Base Stations 801, 802 and 803 receiving a signal (i.e., the same signal) from a single handset (i.e., the same handset, not shown) are provided to the Switch, as described hereinabove (e.g., over the LAN 140). At the Switch, these measurements are "smoothed" by a plurality (three shown) of sliding window averaging filters 804, 805 and 806, respectively, and they are compared with one another by decision (handoff control) logic 807, which issues a signal ("Select Base Station") to effect handoff. The sliding widow average filters 804, 805 and 806 compute the average quality received from a given Base Station over the previous T.sub.r milliseconds, typically hundreds of milliseconds, (over a time interval encompassing at least two subsequent signals from the receiving Base Station), taking into account only the times in which the handset signal was received by more than one Base Station.

The following pseudo-code describes a preferred operation of the decision logic 807:

The inputs to the decision logic are marked by $X_1 \ldots X_k$

The current Base Station communicating with the handset is Base Station `m`

(1) If maximum (X_l, . . . ,X_k)=X_j

(2) If $X_j > X_m + D_1$

(3) If time from previous handoff > T_d

(4) Transfer call to Base Station j

(5) If $X_j > X_m + D_2$

(6) Transfer call to Base Station j

If a Base Station receives the handset at a level which is stronger by at least D_1 decibels than the level which is currently received by the Base Station with which the handset currently communicates, and at least T_d milliseconds have passed from the last handoff, a handoff is required. This is intended to address the situation of a moderate and slow movement of a handset from one Base Station to another.

If a Base Station receives the handset at a level, which is stronger by at least D.sub.2 decibels than the level, which is currently received by the Base Station with which the handset currently communicates a handoff will be performed immediately. This is intended to address the situation of an abrupt move from one Base Station to another.

When the Base Stations use one of the active methods to detect handset presence, the decision algorithm is basically the same as has just been described. The main difference comes from the fact that in the active method the different Base Stations are able to determine the quality that they measured for a single hop, which all of them can identify. Therefore, the Switch is able to compute the quality difference per hop, and thus improve the timing accuracy of handoff.

FIG. 17B illustrates the handoff decision method when using an active detection method. According to the TOD indication that is received along with the quality measurements, the measurements of the same hops are aligned in time (808). They are then averaged over X hops (804, 805, 806), and the same decision logic (807) that was described above may be used to determine which is the most suitable Base Station to connect to the handset, and issue the "select Base Station" signal.

The methods described hereinabove relate to performing handoff between Base Stations when the handset is conducting a call. When a handset is not conducting a call it may move from one Base Station to the other. When it moves, one connection will be ended, and another will be created. The mechanism for ending a connection, and initiating a new one is part of the short-range wireless communication protocol. For example in the Bluetooth protocol, the handset searches for a Base Station, when it finds one, it stays connected to it. If it leaves the coverage area of the Base Station, the connection will end, and the handset will search again for a Base Station.

This mechanism is sufficient for a handset that is not currently in a call, but it does not guarantee smooth handoff while in a call. Although this method may be suitable in some conditions, disconnecting from one Base Station and re-establishing connection with the other may take several seconds, and during this time it will not be possible to initiate a call. One of the advantages of the method of actively "PING"ing a handset is that its movement can be detected quickly, even when it is not engaged in a call, and this "waiting" period can be eliminated.

Operation Procedures

The following sections describe the operation procedures of the Base Stations and the Switch, that are used on the following events:

A new connection is created

A connection is closed

A handset presence is detected

Switch decides on handoff

Handoff performed by Base Stations

When receiving an update message from a Base Station

Base Station Procedures:

1) New connection created:

Create new low-level protocol instance.

Add connection to "Base Station Connections Table"

Set reserved hops for neighbors transmissions (if active detection method is used)

Send new connection information (handset ID, Base Station ID, handle to low-level protocol instance) to Switch

Send new connection information to all neighboring Base Stations (handset, id, Base Station id, reserved hops, call's parameters: TOD, device address, encryption key, authentication key, links status, etc.)

2) Connection closed:

Close low-level protocol instance.

Remove connection from "Base Station Connections Table"

Send closed connection information to Switch (handset ID, Base Station ID, handle to low-level protocol instance)

Send closed connection information to neighboring Base Stations (handset ID, Base Station ID)

3) Receive new connection information from neighboring Base Station

Add connection information to "Neighboring Connections Table"

4) Receive closed connection information from neighboring Base Station

Remove connection from "Neighboring Connections Table"

5) Detect presence of handset in coverage area

Create low-level protocol instance.

Synchronize TOD

Measure received quality

Update Switch (handset ID, neighbor Base Station ID, and Base Station ID, TOD, handle of low-level protocol instance).

6) Receive message from high-level protocol

Check if corresponding low-level protocol is running on Base Station and, if it is:

Route message to the corresponding low-level protocol instance.

7) Receive handoff command with TOD of handoff

If the Base Station is the Base Station currently communicating with the handset:

Wait until handoff TOD

Stop transmissions to the handset

Move connection parameters from "Base Station connection table" to "Neighboring Connection Table"

If the Base Station was a neighbor of the Base Station communicating with the handset:

Wait until handoff TOD

Start transmitting to handset

Route call to destination Base Station or Switch

Send new connection information (handset id, Base Station ID, handle to low-level protocol instance) to Switch

Send new connection information to all neighboring Base Stations (handset, ID, Base Station ID, reserved hops, call's parameters: TOD, device address, encryption key, authentication key, links status, etc.)

Switch procedures:

1) Receive new connection information

Create instance of high-level protocol

Update "Connections Table"

1) Receive close connection message

Close high-level protocol instance

Remove from "Connections Table"

1) Receive quality measurement from Base Station

If from Base Station connected to the handset,

Store measured quality and TOD of measurement

Check if a neighboring Base Stations should be removed from the handoff candidate list (according to last TOD in which they detected the handset), and remove if necessary

If from a neighbor of the Base Station connected to the handset,

Add neighbor as candidate for handoff to "Connection Table" with TOD of message.

Perform quality comparison and decision of handoff.

If a handoff is required:

Send handoff commands to the originating Base Station and the Base Station receiving the handset.

Update "Connections Table"

When there is more than one Switch in the system (see, e.g., FIG. 22) the Switch procedures will be slightly different, as follows:

1) Receive new connection information

Create instance of high-level protocol

Update "Connections Table"

Send new connection information to all the Switches.

1) Receive close connection message

Close high-level protocol instance

Remove from "Connections Table"

Send remove connection to all Switches

1) Receive quality measurement from Base Station

If from Base Station connected to the handset

Store measured quality and TOD of measurement

Check if the neighboring Base Stations should be removed from handoff candidate list (according to last TOD in which they detected the handset), and remove if necessary

If one of the neighboring Base Stations is connected to a different Switch, send updated information to the other Switch.

If from a neighbor of the Base Station connected to the handset

Add neighbor as candidate for handoff to "Connection Table" with TOD of message.

Perform quality comparison and decision of handoff.

If a handoff is required:

Send handoff commands to the originating Base Station and the Base Station receiving the handset.

Update "Connections Table"

Update "Calls Table"

Send information to all Switches

1) Receive update from another Switch

If new connection: add item to "Connections Table"

If closed connection: remove item from "Connections Table"

If quality measurement: update "Connection Table"

If handoff

Update "Connections Table"

Update "Calls Table"

The Switch also keeps a LOG file of the events in the system. The LOG file includes the quality measurements, call parameters (time, caller ID, called ID, reason for termination, etc.) and the handoff decisions. These may serve to analyze the Base Station's topology and allow for topology improvements and adjustments. For example the reason for a call termination may be correlated to low receive quality, which could imply that there is a "hole" in the coverage pattern.

Detection and Time Synchronization

FIG. 20 illustrates the implementation of detection and time synchronization method that is based on a correlator. As described hereinabove, the correlator/detector (308) was the basis for synchronization of TOD in FIG. 11, and for the detection of presence of a transmitter and synchronization in FIG. 13.

It is important for a neighboring Base Station to be able to detect and synchronize with a mobile unit prior to receiving a handoff. This process should be done as quickly as possible to ensure seamless handoff of a session. Generally, the process begins with a wide-range search for "target" signals having the correct timing for a mobile unit, based on the rough synchronization information provided by the Base Station which is connected with the mobile unit. These "target" signals are estimated, based on the rough synchronization data. When a match is found (an actual signal from mobile unit is acquired) the search range can be narrowed accordingly (and

dramatically). Then, synchronization can proceed as described hereinabove.

The detector/correlator 2000 comprises a signal detector 1001 and a correlator 1002. The task of the detector/correlator 2000 is to provide information whether a target signal is currently received, and to estimate the parameters which serve the hand-off process. The signal detector 1001 and correlator 1002 receive the actual received signal 1008 and its corresponding time 1009 and frequency 1004, as illustrated, and correlates them to the emulated time and frequency instances 1006. The fine TOD, drift and quality of the target signal are estimated by the correlator 1002 which reports the estimated parameters 1007, along with a status which indicates whether the target signal has been acquired, or not. The task of the signal detector 1001 is to process the received signal 1008 and to estimate its time of arrival (TOA), i.e. the exact timing of a hop, and quality values 1003. This may be done by several techniques, which are well known from classical detection theory. As an example of such techniques, an energy detector and a matched filter can be used.

FIG. 21 shows an example of the implementation of the signal detector 1001 of FIG. 20. In FIG. 21, the received signal 1008, which is received from the RF receiver output, is fed to an energy detector 1011. The energy detector 1011 produces a signal 1014, which represents the temporal energy shape of the signal. The temporal energy shape 1014 is fed into a matched filter 1012. The matched filter 1012 has an impulse response,

which matches the energy shape the target signal. As is known, per classical estimation and detection theory, the matched filter 1012 will produce maximum value at the time instance which represents an estimation of the time of arrival (TOA), i.e. exact timing of the hops, of the target signal 1008. The maximum value of the filter output represents an estimation of the received signal quality. The time instance, which represents the estimation of the TOA, is represented in terms of the time clock 1009. The matched filter 1012 reports TOA and quality values of which the quality is above a threshold value T.sub.h, and the maximum is a global maximum within a two-sided time window of T.sub.s1 microseconds. Other implementations of the signal detector 1001 in FIG. 20 can be utilized. Such implementations can correlate the received signal 1008 with the known portions of the target signal temporal pattern instead of its energy temporal shape. Such implementations may achieve improved estimation performance.

The time-frequency correlator 1002 in FIG. 20 receives the TOA and quality values 1003 produced by the signal detector 1001 and corresponding frequency values 1004, which are the actual tuning frequency of the RF receiver. These inputs are referred to herein as the `actual` TOA-frequency-quality instances. These include the estimated information of the signals, which are received from the various sources. On the other inputs, the time/frequency correlator 1002 receives emulated values of TOA and frequency 1006 instances for a specific target source (i.e. a specific handset). We will refer to these values hereafter as `target` TOA-

frequency instances. The time-frequency correlator seeks matches in the instances from both sources--the `actual` and the `target` and detects TOA-frequency patterns at the `actual` instances which are `similar` to the `target` pattern. This process is performed in two possible modes:

1. `Acquisition` mode in which a match of the `target` to `actual` patterns is searched over longer time shifts periods, which cover the uncertainty of the possible fine TOD.

2. `Tracking` mode in which the fine TOD and drift have been already estimated, and the match between of the `target` to `actual` is searched and verified on new TOA-frequency instances over a shorter uncertainty period.

The `actual` data 1003 and 1004 is written into `actual` instances history buffer (e.g., FIFO) and constitutes a list of which records consists of `actual_TOA`, `actual frequency` and `actual_quality`. The `target` data 1006 is written into `target` instances histories buffer (e.g., FIFO) and constitutes a list of which records consist of `target_TOA` and `target_frequency`.

In the `acquisition` mode, at any given time, records from both lists of which TOA values are `younger` than T.sub.y1 milliseconds (where T.sub.y1 is typically 10,000) in relation to current time clock (to be referred hereafter as `young` records) are processed as follows:

For each `target` record, look for `actual` records, which satisfy:

Matching frequency value (i.e. `actual frequency`=`target_frequency`).

Absolute value of `TOA_diff` (`TOA_diff`=`known_diff`--(`actual_TOA`-`target_TOA`)) is smaller than T.sub.y2 milliseconds (where T.sub.y2 is typically 500). Note: `known_diff` is 0 in the acquisition mode.

The `target` and `actual` records, which satisfy the conditions, are referred hereafter as `candidate_records`.

For each of the `candidate_records` write the corresponding `TOA_diff`, `actual_quality` value and `actual_TOA` value into a `candidates_list`.

When all the `young_target` records are processed against all `young_actual` records, sort the `candidate_list` by the `TOA_diff` values and produce a `diff_histogram` with resolution of T.sub.y3 microseconds (where T.sub.y3 is typically 1000) as follows:

Scan the sorted `candidate_list` records, identify the `TOA_diff` values which are within the TOA diff range of each bin, and accumulate the corresponding `quality_values` producing `diff_quality_histogram` values per each bin.

Search the `diff_quality_histogram` for values, which are bigger than Ky (where Ky is typically 50). If found, set the status output 1007 value to `detected`, and identify the corresponding `actual_TOA` and `TOA_diff` values. The corresponding `actual_TOA` and `actual_diff` values are referred to hereinafter as a `diff_cluster` of records. If no `diff_quality_histogram` values exceed Ky, set the status output 1007 to `not_detected`.

If status has been set to `detected` perform a `least mean square error` (LMSE) estimation of a linear line which mostly fits the two-dimensional `diff cluster` instances (`actual_TOA` by `actual_diff`). LMSE estimation is a well-known estimation technique and is described in the classical literature.

The estimated linear line can be represented as:

diff='est diff0'+'est drift'*(TOA-TOA0) where TOA0 is the smallest `actual TOA` value out of the `diff cluster` records, `est diff0` is the estimated output parameter of `fine TOD` 1007 and `est drift is the estimation the output parameter `drift` 1007. The `diff quality histogram` value normalized by the corresponding `bin population` is the `quality` output 1007 value.

In the `tracking` mode, at any given time, process the data in a similar way as in the `acquisition mode but with the following differences:

The value of `known diff` is set to `prev_est_diff0`+`prev_est_drift`*

(`current_TOA0`-`prev_TOA0`). The terms `prev_est.sub.--diff 0` and `prev_TOA0` represented the `est_diff0` and `TOA0` which has been evaluated in the previous calculation (either in `acquisition` mode or in `tracking` mode). The term `current_TOA0` is the `TOA0` of current calculation.

A smaller value of Ty.sub.4 microseconds (when Ty4 is typically 2000) for the `tracking` mode replaces Ty.sub.2 of the `acquisition` mode.

Base Station

FIG. 18 illustrates, in block diagram form, major components of a Base Station 1800. A plurality (three shown) of front-end processors 604, 605 and 606 are connected to a plurality (three shown) of antennas 601, 602 and 603, respectively. The front-end processors 604, 605 and 606 perform the low-level protocols of the short-range communication protocol, described hereinabove.

When idle, a front-end processor 604, 605 and 606 waits for a handset to establish a new connection. When a connection is created it reports the call parameters (e.g., Bluetooth device address, TOD, Encryption key, authentication key, etc.) and transfers the call stream to the central processing unit 607. When a front-end processor is idle, it can also be used to receive (detect, monitor) a handset that is leaving a neighboring Base Station. The central processing unit 607 then sends the front-end processor, the call parameters, and the exact time of handoff. The front-end processor, would at that time,

continue the communicating with the handset, as if it was still in the neighboring Base Station.

A separate circuit module 612 (TOD Synchronization & Handset Detection) is used to detect arrival of new handset, and also to synchronize the TOD of all the calls, according to the techniques described hereinabove. This unit 612 is shown having its own antenna 611.

The central processing unit 607 controls the operation of the front-end processors 604, 605 and 606, receives data about new handoff and fine TOD estimation, receives data from neighboring Base Station, maintains the "Neighbor Connection Table", communicates with the Switch and the other Base Stations. The local area network interface 609 is suitably a standard interface, for example a connection to a 10Base-T or 100-Base-T Ethernet, for connecting to the Local Area Network (LAN) 140. Memory 608 and Non-Volatile Memory (NVM) 610 is shown connected to the central processing unit (CPU) 607.

FIG. 19 illustrates, in greater detail, an implementation of a representative one 604 of the front-end processors 604, 605 and 606 described hereinabove with respect to FIG. 18. A base-band processor 631 determines the transmission and reception channels, encodes and decodes speech, deals with error correction, authentication and encryption. The radio frequency front end 630 modulates and demodulates the data, and connects to the antenna 601. The base-band processor 631 controls the frequency ("frequency control" 633) of

each hop, sends and receives data ("energy, time of detection" 634) from the RF front end, and receives indication of signal strength ("base band parameters" 635).

Applications for the WPBX

Most of the preceding sections discussed the use of the methods disclosed in the current invention for a WPBX supporting telephony applications. Except for the methods shown in FIGS. 5, 6 and 7, most of the methods disclosed hereinabove are application independent, as follows:

The method for dividing the short-range communication protocol in order to support mobility of devices. The high-level protocols, including telephony-related protocols, and also protocols for data transfer, such as PPP over the short-range communication link.

The methods for synchronizing the Base Station.

The methods for detecting movement of transmitter from one Base Station to another

The methods for decide when to perform handoff and to what Base Station to hand the call.

These methods can be implemented in order to connect mobile devices that are equipped with a short-range communication transmitter/receiver such as a Bluetooth chipset. Such devices may move from the coverage area of one Base Station to the coverage area of another, when the Switch and Base

Stations handle the handoff of the connection from one Base Station to another. Typical application may be the connection of laptop computers equipped with a Bluetooth short-range communication link to the organization's e-mail server. Another possible application is connecting such mobile devices that for example utilize the PPP (point-to-point protocol) over Bluetooth wireless link, to the Internet, via a central remote access server. A system may also support several such applications.

For example in FIG. 24, a personal data (or digital) assistant (PDA) 1301, a laptop computer 1302 and a cellular handset 1303, connect to the systems Base Stations 1304 and 1305, as illustrated. The PDA 1301 and the laptop 1302 may connect, via the local area network (LAN) 1306 to an e-mail server 1308 in order to send or receive messages, and may also connect to a remote access server (RAS) 1309 for Internet connection. The cellular handset 1303 may connect to another handset (not shown) or, via a Telephony Gateway 1306 to the PSTN. The Base Stations 1304 and 1305 and the Switch 1307 handle the various levels of the communication protocol, utilizing the methods described hereinabove.

It is within the scope of the invention that the mobile unit is a device which is any of the following devices: telephone handset, standard cordless telephone handset, cellular telephone handset, personal data device, personal digital assistant (PDA), computer, laptop computer, e-mail server, and a device utilizing point-to-point protocol (PPP) to the Internet via a central remote access server, a

headset (including a cordless headset), a personal server, a wearable computer (or computing device), a wireless (video or still) camera, or a mobile music players (i.e., MP-3 devices etc).

Although the invention has been described with respect to a limited number of embodiments, it will be appreciated that many variations, modifications and other applications of the invention may be made, and are intended to be within the scope of the invention, as disclosed herein.

What is claimed is:

1. In a wireless communication system comprising at least two Base Stations, at least one Switch in communication with the Base Stations, a method of communicating between mobile units and the Base Stations comprising:

dividing a short-range communication protocol into a low-level protocol for performing tasks that require accurate time synchronization and a high-level protocol which does not require accurate time synchronization; and

for each connection of a mobile unit with a Base Station, running an instance of the low-level protocol at the Base Station connected with the mobile unit and running an instance of the high-level protocol at the Switch.

2. Method, according to claim 1, wherein:

the low-level protocol comprises procedures selected from the group consisting of control

and modulation of RF signals transmitted to the mobile unit by the Base Station, frequency hopping, error correction, accurate time synchronization, device address, rough Time Of Day (TOD), voice channel allocation, forward error correction parameters, encryption keys, authentication keys, voice coding, device addressing, address of a parked mobile unit, definition of an asynchronous data link, and data FIFOs; and

the high level protocol comprises procedures selected from the group consisting of procedures for link setup and control, high-level protocol multiplexing, packet segmentation and re-assembly, quality of service management, service discovery, emulation of serial port over a logical link manager, interoperability for applications over Bluetooth and infra-red protocols, call control signaling and establishment of speech and data calls between mobile units, interoperability for Bluetooth wireless technology with PPP as communication bearer for wireless application protocol (WAP), command interface to a base-band controller and link manager, access to status information, discovering available services, cordless telephony, supporting inter-com features in handsets, emulation of serial port, supporting the use of a headset, supporting dial up networking, supporting fax transmission and reception, defining how mobile units can access a LAN with PPP, defining generic object exchange, supporting

an object push model, supporting file transfer, and synchronizing the mobile units.

3. Method, according to claim 1, further comprising:

using a real time multi-tasking operating system in order to allow handling of many instances of the protocols simultaneously in the Base Stations and in the Switch.

4. Method, according to claim 1, wherein:

the Switch handles routing of data from the high-level protocols to the low-level protocols, and from the low-level protocols to the high-level protocols.

5. Method, according to claim 1, wherein:

the mobile unit is equipped with a short-range wireless communication transmitter/receiver.

6. Method, according to claim 1, wherein a mobile unit is a device selected from the group consisting of:

telephone handset, standard cordless telephone handset, cellular telephone handset, personal data device, personal digital assistant (PDA), computer, laptop computer, e-mail server, a device utilizing point-to-point protocol (PPP) to the Internet via a central remote access server, a headset, a personal server, a wearable computer, a wireless camera, and a mobile music player.

7. Method, according to claim 1, further comprising:

providing communication links between the Base Stations, wherein the communication links between the Base Stations are selected from the group consisting of RF links and land lines; and

transferring connection status information and synchronization information between the Base Stations over the communications links.

8. Method, according to claim 1, wherein:

the Base Stations and the Switch are connected via a wired or wireless local area network (LAN).

9. Method, according to claim 1, wherein:

a first plurality of Base Stations are connected to a first Switch;

a second plurality of Base Stations are connected to a second Switch;

the Switches maintain status tables for calls and connections that they are handling, and maintain copies of each other's status tables; and

when a Switch updates one of its status tables, it sends the updated status table to the other Switches.

10. Method, according to claim 1, wherein:

the wireless communication system comprises a wireless private branch exchange (WPBX) handling calls from mobile units comprising handsets.

11. Method, according to claim 10, further comprising:

in the Switch, maintaining a table of calls being handled by the WPBX, comprising information selected from the group consisting of a unique Call Identification number for each active call being handles by the WPBX, the origin of the call, the destination of the call, Calling Number Identification (CNID), Destination Number (DN), Originating Base Station Identification, Destination Base Station Identification, Status of call, information for billing, and information for performance analysis.

12. Method, according to claim 10, further comprising:

in the Switch, for each call, maintaining a table of connections comprising information selected from the group consisting of Handset ID, Current Base Station ID, handle of high-level protocols, handle of low-level protocols, Number of candidate Base Stations for handoff, List of candidate Base Stations for handoff, and List of handoff status for each candidate Base Station.

* * * * *

IN THE UNITED STATES DISTRICT COURT
FOR THE EASTERN DISTRICT OF TEXAS
MARSHALL DIVISION

COMMIL USA, LLC	)(
	)(CIVIL DOCKET NO.
	)(2:07-CV-341-CE
VS.	)(MARSHALL, TEXAS
	)(
	)(MARCH 24, 2011
CISCO SYSTEMS, INC.	)(9:30 A.M.

PRETRIAL HEARING
BEFORE THE HONORABLE JUDGE
CHAD EVERINGHAM
UNITED STATES MAGISTRATE JUDGE

APPEARANCES:

FOR THE PLAINTIFFS:
(See Attorney Sign-In Sheet)

FOR THE DEFENDANTS:
(See Attorney Sign-In Sheet)

COURT REPORTER:
MS. SHELLY HOLMES, CSR
Deputy Official Court Reporter
2593 Myrtle Road
Diana, Texas 75640
(903) 663-5082

(Proceedings recorded by mechanical stenography, transcript produced on a CAT system.)

instructions, and you have that where it says -- and maybe I should turn to that, but I don't have that at my fingertips.

There is a place where it says a person, and then there's a place when it says the product. We did the research, Your Honor, and we're very strongly of the opinion that it is that if the products in a method -- if the accused products perform all steps and elements of the claim, then a person who makes, uses, or sells that product is a direct infringer, we can think of many examples where otherwise there would be no direct infringement. I mean, if you have a product, you say here's the method, you take this chemical, you, you know, add that chemical, and then you heat it to 400 degrees, and the accused products perform that in an automated way. They were designed in a way to do that.

It doesn't require someone turning the switch. It's -- it's -- and so that's -- that's our view. We see no case that says that -- that the -- that the person has to commit the acts. Now, the only issue here I believe is the divide step, and the -- we have to show as to that that the accused products do divide, and we can do that, but it doesn't -- it's not focused --it's -- it's focused on the accused products performing the step, not the person that does it. Cisco designed

where it was done, but the accused products perform that step. When the software, the LWAPP software sits on top of the 802 chip, that software is taking the signals, the packets that -- are coming from the mobile device to the access point, and that software which sits in the access point is routing the headers that deal with the specific functions. If it's time critical, it stays under that software in the source code on that access point. If it's a function that's not, then that software tells it to go on to the controller, and the functions occur there. So that division occurs within the accused product.

The fact that it was designed to do that by Cisco and that Cisco designed it, you know, two years prior doesn't change the fact that someone is using -- of course, under direct infringement, they don't have to have any intent -- they're using a product that -- that infringes because it performs all the steps of the patent.

THE COURT: Okay.

MR. WERBNER: And -- and that ties to -- to the prior determination. The only possible issue where one could say the customer -- I mean, I don't -- I don't see how in this case it would be any different. If the customer turns on the accused products, because it's

already been determined that when the -- when the products are turned on it performs all those steps. So we would be relitigating matters that were already determined.

THE COURT: Well, here's where I am as far as the limine point is concerned. I'm going to -- I'm granting your request in No. 4 to prevent Cisco from denying that it is a direct infringer. But I haven't yet decided how much, if any, of the prior trial I'm going to allow to enter this trial.

I am denying your request to prevent Cisco from challenging infringement by the customers of the accused products because I -- I mean, I think that14 that's fairly within the scope of this case, notwithstanding what your view is as to what the prior jury found.

I am denying your request in No. 5 to prevent Cisco from challenging the fact that the accused products practice each step of the method.

I am granting your request in No. 6 to preclude evidence of invalidity or evidence of Cisco's good faith belief, if any, in the invalidity of the patent. I will allow Cisco to prove or attempt to prove that it had a good faith belief that it did not infringe the patent.

So you understand the distinction I'm drawing, Mr. Frahn?

MR. FRAHN: If I understand the distinction, you're allowing Cisco to put on proof that it had a good faith belief that it did not infringe the patent, but you are precluding Cisco from putting on any evidence that it had a good faith belief that the patent was invalid.

THE COURT: Correct.

MR. FRAHN: So Cisco may not adduce any evidence as to its belief on the validity of the patent?

THE COURT: That's correct.

MR. FRAHN: Well, Your Honor, we -- we strongly object to that. I think that it's squarely within the case law.

THE COURT: Okay. Which case law is that?

MR. FRAHN: Under DSU.

THE COURT: Was that an invalidity belief?

MR. FRAHN: It was a belief as to whether they infringed a valid patent. I mean, you can't infringe an invalid patent.

THE COURT: Is that the language of DSU?

MR. FRAHN: I think the specific issue --

THE COURT: And with respect to the statement in your brief that -- let's see, where was it?

14

In Kinetic Concepts, Inc., against Blue Sky Medical Group, the Federal Circuit again found that the defendant's subjective belief and objective basis for believing the patent was invalid or not directly infringed was sufficient to defeat a claim for inducement. If you could point me to the portion of that case that states that, I would appreciate it.

MR. FRAHN: Your Honor, I'm not sure I can do it on the fly, but I will do my best. And if I find it during the course of the rest of the argument --

THE COURT: Okay. I'll be interested in seeing it.

MR. FRAHN: Thank you, Your Honor.

THE COURT: All right. That takes care of 4, 5, and 6.

MR. GARDNER: Your Honor, can I ask one question with one clarification?

Will plaintiff be able to say that no one has challenged the validity of the patent?

THE COURT: I hadn't gotten there yet, Mr. Gardner.

MR. GARDNER: Yes, sir, sorry.

MR. FRAHN: Your Honor, I --

THE COURT: Yes.

MR. FRAHN: -- I believe I have it while

15

we're --

THE COURT: Okay.

MR. FRAHN: -- hot on the subject if you want to return to it.

This is the Kinetic Concepts case, and the pin cite is at Page 1025, and the testimony related to -- this is in the head note Section 21 and 22.

THE COURT: All right.

MR. FRAHN: Richard Weston testified that he thought that because the Versatile, and that is the product at issue, simply performed the Chariker-Jeter method, which was in the public domain, can't see how his patents could pose no barrier.

THE COURT: Okay.

MR. FRAHN: Okay. And so what that's -- that's saying that because what was already in the public domain was then claimed in the patents that were being asserted against them, the company that was accused of infringing didn't think that that was a problem.

THE COURT: Okay. I think the case went on to say that although practicing the prior art is not a defense to direct infringement, it could form a good faith belief that they were not directly infringing the claim, correct?

16

MR. FRAHN: I think, and that may be --

THE COURT: That's the same thing that the Echo Lab case said, as well, but they didn't come out and say that a subjective belief that the patent-in-suit was invalid is sufficient to defeat a claim for inducement. They always talk about it in terms of a subjective belief that you're not infringing.

MR. FRAHN: Well, you clearly read the case as have I. Perhaps we've come to different conclusions.

If this particular issue of whether a subjective belief of invalidity on -- is a specific point on which we need to provide you with additional case law that addresses that, I'm happy to do that. I thought that that point was --

THE COURT: I found one district court case that holds actually what you said the Circuit cases hold, but beyond that, I hadn't found much from the Circuit that helps me.

MR. FRAHN: Okay. Well, Your Honor, we'd be happy to do a search. We took it as a not disputed issue of law, particularly since there was no law cited in Commil's motion on either point that an accused inducer is allowed to induce evidence of its subjective intent or objectively reasonable basis for believing non-infringement or invalidity.

17

THE COURT: Okay.

MR. FRAHN: And if you found the cases that we did cite lacking, even despite the lack of contrary authority, I'd request the opportunity to supplement the briefing on that particular point.

THE COURT: Okay. That leave is granted.

MR. FRAHN: Thank you, Your Honor.

THE COURT: For now, I'm going to stick with my rulings on the limine points.

All right. 7, 8, and 9, I think, deal with damages issues; is that correct?

MR. WERBNER: 7 and 8 do, Your Honor. 9 relates to Cisco employing people in the district.

THE COURT: All right. 7 and 8, I'm going to table those until after jury selection. I'm going to consider all of the damages testimony --

MR. WERBNER: All right.

THE COURT: -- separately --

MR. WERBNER: Yes, sir.

THE COURT: -- on both -- that relates to both sides. 9 is denied.

MR. OSTROW: Your Honor?

THE COURT: Yes.

MR. OSTROW: Can I interrupt for one second?

18

THE COURT: Yes.

MR. OSTROW: You said you were going to table them.

The last time we had Mr. Carlile give some testimony to Your Honor only -- do you want our damages witness here as to your questions with respect to that, or is that not going to be necessary?

THE COURT: I'm going to -- with respect to the folks that have already testified in --

MR. OSTROW: Yes, sir.

THE COURT: -- in the prior case --

MR. OSTROW: Same guy.

THE COURT: -- I'm not going to require them to be here again. I'll take judicial notice of their prior testimony. If you want to bring anybody, that's fine, or if you want to -- if you want to wait until your -- Mr. Becker is going to be here anyway, then I'll just -- I'll do it after hours one day, okay?

MR. OSTROW: Thank you, Your Honor.

THE COURT: He doesn't make a special trip.

MR. OSTROW: I just want to make sure that we're clear on that.

THE COURT: All right. 9 is denied.

10 is granted.

11 is granted.

12 is granted.

13 is granted in part and denied in part. It's granted to the extent that Cisco is not going to refer to your client as a patent troll. It's otherwise denied with respect to his business that Commil is in.

No. 14 is denied.

No. 15 is granted.

16 is denied with the caveat that, you know, I don't -- I don't have any problems with fair cross-examination, but, you know, sidebar comments don't generally require an objection for me. So just be -- I'll leave you to your own good judgment.

17 is granted.

And that concludes plaintiff's motions in limine.

Motions in limine, folks, as they were last time, are not definitive rulings on the evidence. You know, you need to approach the bench before you get into anything that's covered by an order in limine.

All right. Mr. Werbner? Thank you.

MR. WERBNER: Thank you, Your Honor.

THE COURT: No. 1, I'm going to carry that.

No. 2 is granted.

No. 3 is granted, unless I change my mind on allowing in your good faith belief regarding the

validity of the patents. For now, it's granted.

No. 4, are y'all going to challenge whether it's a short-range communications protocol?

MR. FRAHN: Your Honor, we're not challenging whether 802.11 is short range, but their expert, if you recall from the prior times, said it was 802.11 plus --

THE COURT: Right.

MR. FRAHN: -- LWAPP. And if he maintains that position, I imagine we -- we would challenge that. We have no dispute about 802.11.

THE COURT: Okay. Well, 4 is denied.

5 is denied.

6, I'm going to table that until after jury selection.

Back to No. 3, portions -- subpart B and C are granted. Subpart A, with respect to the display of the patent, is denied.

7 was agreed to. That's granted.

8 is denied.

All right. Mr. Werbner?

MR. WERBNER: Yes, Your Honor.

THE COURT: How many additional disputes with respect to exhibits do y'all foresee having?

MR. WERBNER: Well, we made a lot of

objections, but we attached an Exhibit A which groups those into categories, and I think there's four or five categories. I think those can be resolved fairly quickly by category, so I don't see anything more there.

On the plaintiff's exhibits, we met and conferred this morning on this subject. Pretty much all the exhibits that we had before, there's no real problem at all there. Most are agreed, and the few that aren't are not a big problem.

But we -- we added 400 to 500. We reached agreement this morning. Most of those are -- are Cisco documents. We reached agreement that there's no question about authenticity, and counsel stated they need a little more time to talk to people to just get a better understanding of what some of those documents are.

I'm very hopeful that in the next few days that we can resolve those. A lot of them, if I can maybe just -- if it's helpful to the Court, I can give two -- the nature of a couple of those if the Court wishes.

THE COURT: Okay.

MR. WERBNER: We have about five or six videos off the Cisco website, each of which is about two to three minutes, where Cisco appears with a customer,

* * *

IN THE UNITED STATES DISTRICT COURT
FOR THE EASTERN DISTRICT OF TEXAS
MARSHALL DIVISION

COMMIL USA	* Civil Docket No.
	* 2:07-CV-341
VS.	* Marshall, Texas
	*
	* April 6, 2011
CISCO SYSTEMS, INC., ET AL	* 1:15 P.M.

TRANSCRIPT OF JURY TRIAL
BEFORE THE HONORABLE CHAD EVERINGHAM
UNITED STATES MAGISTRATE JUDGE

APPEARANCES:

FOR THE PLAINTIFFS:
MR. MARK S. WERBNER
MR. RICHARD A. SAYLES
MR. MARK D. STRACHAN
Sayles Werbner
1201 Elm Street
4400 Renaissance Tower
Dallas, TX 75270

FOR THE DEFENDANTS:
MR. HENRY B. GUTMAN
(CISCO) MR. JEFFREY E. OSTROW
MR. HARRISON J. FRAHN, IV
MR. JONATHAN SANDERS
Simpson Thacher & Bartlett
2550 Hanover St.
Palo Alto, CA 94304

APPEARANCES CONTINUED ON NEXT PAGE:

COURT REPORTERS:

MS. SUSAN SIMMONS, CSR
MS. SHELLY HOLMES, CSR
Official Court Reporters
100 East Houston, Suite 125
Marshall, TX 75670
903/935-3868

(Proceedings recorded by mechanical stenography, transcript produced on CAT system.)

APPEARANCES CONTINUED:

FOR THE DEFENDANTS:

MR. OTIS CARROLL
(CISCO) Ireland Carroll & Kelley
6101 South Broadway
Suite 500
Tyler, TX 75703
MR. MICHAEL E. JONES
Potter Minton
110 North College
Suite 500
Tyler, TX 75702

* * * * * *

P R O C E E D I N G S

LAW CLERK: All rise.

(Jury in.)

THE COURT: Please be seated. I believe we were ready to hear a video excerpt from Mr. Calhoun. If you'll turn the lights down.

MR. WERBNER: Before we do that, Your Honor, we decided that since the other reading for Mr. Calhoun, we would just go to our last witness and not present that.

THE COURT: Okay.

MR. WERBNER: I told counsel. We will call at this time as our witness Mr. Yuval Dovev by video deposition.

THE COURT: Okay.

3

(Video played.)

QUESTION: So you were the CEO of Commil -- and when I say Commil, I mean the Israeli entity. You were the CEO of Commil in 2004 and 2005, correct?

ANSWER: True.

(Video paused.)

MR. WERBNER: I just wanted to say that this was a telephone deposition, Your Honor, and that's why the sound -- the questioner is in the United States; the witness is in Israel.

(Video continued.)

QUESTION: In the same late 2004 timeframe that you were discussing earlier, did you ever approach Cisco?

ANSWER: Yes.

QUESTION: Why did you approach Cisco?

ANSWER: I wanted to engage them in a discussion about potentially acquiring --

QUESTION: Was that for --

ANSWER: -- Commil.

QUESTION: Any other reasons?

ANSWER: Not to my recollection, no.

QUESTION: Who did you speak with at Cisco, if you recall any of their names?

4

ANSWER: I spoke to a guy called Yoav something, who was their manager in Israel at that time. I forget his last name. Yoav -- I don't remember. And there was another guy, a more junior guy. I mean, I think Yoav was in charge of their M & A activities in Israel.

Yoav Leshem? Could that be him? I'm not sure. And -- and as far as I remember, the discussion was pretty short.

QUESTION: When did you talk to him?

ANSWER: Sorry?

QUESTION: First of all, can you spell Yoav's name to the extent that you recall it?

ANSWER: I think it's Yoav Leshem, Y-O-A-V, L-E-S-H-A-M.

QUESTION: And when did you speak with Mr. Leshem?

ANSWER: Alleged Mr. Leshem -- I think --

QUESTION: Approximately?

ANSWER: I think Yoav --

QUESTION: Yoav. I'll just say that.

ANSWER: I think his first name is Yoav for sure, but his last name I'm not sure about. When did I speak to him? Around -- around about that sort of timeframe. I don't remember

5

exactly when.

QUESTION: About how many times did you talk to him?

ANSWER: Not more than three. Once, twice, or three times.

QUESTION: And what did you talk about with Yoav, just generally?

ANSWER: Hey, we are Commil. We're doing something. I -- again, I'm -- I'm not speaking I'm -- I'm kind of generally assuming that this is what I

said, because it has been a while ago. But I introduced Commil. I remember we had a phone conversation, so it wasn't like -- maybe a short e-mail. I don't remember how it was. But I introduced Commil. I said, is there a point for us to enter any sort of discussion? Is Commil interesting for you? And -- and I think the discussion was very -- as far as I remember, it was very brief. He said he will get back to me. I called him again after some time. And then he said, no, we don't see any -- we don't have any interest. And that -- that -- that was the extent of my relationship with him.

QUESTION: You were inquiring whether Yoav had an interest in acquiring Commil?

6

ANSWER: I don't remember if I said it so explicitly, but I -- yes, that was -- that was my intent anyway.

QUESTION: Beyond what you've described, do you recall any other specific things that you discussed with Yoav?

ANSWER: I think I described to him Commil's solution and Commil's core technology, including its patents, very briefly, so without going in too much details.

QUESTION: Do you remember that specifically?

ANSWER: I -- I remember that was --

QUESTION: Or are you -- or are you just --

ANSWER: No, no, no. I --

QUESTION: -- assuming what you might have talked about?

ANSWER: I'm -- I'm -- I'm digging deep to try and kind of dig things out of my long-term memory. But I -- I -- I remember that we thought that -- that we could be interesting for Cisco, because we had what -- what we believed to be the core technology and the underlying technology of what they're using after their Airespace acquisition.

7

But that's probably the extent of my memory there on -- on these discussions. Again --

QUESTION: Okay. I was just asking:

What was the technology that Cisco was practicing after the Airespace acquisition?

ANSWER: We believed that Airespace wireless switch technology is -- how shall I put it simply -- way too close for comfort for Commil's patents.

QUESTION: And what was that based on?

ANSWER: Our technological analysis of how things can be done and -- and about the -- and -- and -- so in two things:

A, on the architecture that they published off the Airespace system and of our anal -- our analysis that we -- our -- I mean, I'm not very technical, but my technology people basically told me, we don't see any other way that it could be done, other than the way that we described in our patents.

QUESTION: Other than what you've described so far, was there any other reason that you thought that Cisco's technology might be too close for comfort for Commil's patents?

ANSWER: You're speaking generally about Cisco or about Airespace?

8

QUESTION: First, let me ask you about Cisco as it was implementing Airespace's technology after the acquisition.

ANSWER: Other than what I described internally, no. This is -- this is the analysis that we done at that time.

QUESTION: Did you ever tell Yoav that you believed Cisco might be infringing any Commil patents?

ANSWER: I -- I -- I remember telling him that we had the patent that we think line the core of the Airespace system. I didn't think it was as blunt as you describe it.

QUESTION: Tell me anything you recall specifically about what you told Yoav about the patents.

ANSWER: That goes down to what I -- what I told you. I mean, that we have a mobility system -- I mean, again, I don't remember the exact words. That we have a wireless mobility system and that we have patents for the wireless switch and wireless mobility between access points. But I don't -- I don't remember more than that. But that was the general gist of the discussion.

QUESTION: Why do you say that you assume you would have sent him some documents?

9

ANSWER: Because normally, every company that I spoke to in that particular context, I had a -- a -- normally, a discussion of that sort ends: Okay, send me some materials. Let me see and talk to my friends and see.

And then I had this presentation that I sent, just a pretty generic kind of describing the things that I was talking about.

QUESTION: Just generally, what -- what did that presentation say?

ANSWER: Commil's assets, where we are at, what our patent's about, what is our technology about, what is the status of our commercial

relationship. Like a small prospectus, if you wish. I think -- I think --

QUESTION: Do you still have that presentation?

ANSWER: No. No. But I think you do.

QUESTION: I'm sorry. I didn't mean to interrupt you.

ANSWER: No, it's okay. I -- I -- I think it was --

QUESTION: Oh, we do?

ANSWER: Yeah, I think -- I think you do. I think it was -- I think it was the presentation I was

* * *

IN THE UNITED STATES DISTRICT COURT
FOR THE EASTERN DISTRICT OF TEXAS
MARSHALL DIVISION

COMMIL USA	* Civil Docket No.
	* 2:07-CV-341
VS.	* Marshall, Texas
	*
	* April 6, 2011
CISCO SYSTEMS, INC., ET AL*	8:45 A.M.

TRANSCRIPT OF JURY TRIAL
BEFORE THE HONORABLE CHAD EVERINGHAM
UNITED STATES MAGISTRATE JUDGE

APPEARANCES:

FOR THE PLAINTIFFS:
MR. MARK S. WERBNER
MR. RICHARD A. SAYLES
MR. MARK D. STRACHAN
Sayles Werbner
1201 Elm Street
4400 Renaissance Tower
Dallas, TX 75270

FOR THE DEFENDANTS: (CISCO)
MR. HENRY B. GUTMAN
MR. JEFFREY E. OSTROW
MR. HARRISON J. FRAHN, IV
MR. JONATHAN SANDERS
Simpson Thacher & Bartlett
2550 Hanover St.
Palo Alto, CA 94304

APPEARANCES CONTINUED ON NEXT PAGE:

COURT REPORTERS:

MS. SUSAN SIMMONS, CSR
MS. SHELLY HOLMES, CSR
Official Court Reporters
100 East Houston, Suite 125
Marshall, TX 75670
903/935-3868

(Proceedings recorded by mechanical stenography, transcript produced on CAT system.)

APPEARANCES CONTINUED:

* * *

present three witnesses, the first of whom we're calling now, Mr. Bob O'Hara, by a videotape deposition, which is about 20 minutes and reading, through an assistant, what he testified to on a prior occasion.

The deposition, both – both the prior testimony and the deposition were given by Mr. O'Hara under oath, and he was a founder of Airespace and a developer of the accused product who then went to work at Cisco in 2005 after Cisco acquired Airespace where he continued to work on, at Cisco, the accused products.

In the depo, there's a couple of exhibits where they're called Deposition Exhibit 5 or 200, which do not correspond to the trial, and we've – we've changed those so that the record would be clear.

And at this time, I would like to present, not the video but a few pages of what he testified previously.

THE COURT: Okay.

MR. WERBNER: And I would ask Mr. Payne to be reading the answers that Mr. O'Hara gave.

THE COURT: Come around to the witness stand. Thanks.

MR. GUTMAN: Could we just pause one moment, Your Honor? I want to be able to read along.

THE COURT: Yes.

103

MR. WERBNER: Do I, Your Honor, need to start and stop at line and pages, or can I give this to the court reporter later for that?

THE COURT: You can give her those pages. Just make sure that they're identified, and then she'll be able to mark them page and line.

MR. WERBNER: Yes, I will do that at the recess.

MR. GUTMAN: I apologize, Your Honor. We seem to be having trouble finding our copy. Perhaps Plaintiff's counsel has –

THE COURT: Can you help him out?

MR. PATTERSON: This is the copy for the court reporter, so please don't mark on it.

MR. GUTMAN: I won't mark it.

THE COURT: Let's proceed.

(Excerpt from deposition of Robert O'Hara.)

MR. WERBNER: All right. From May 12th of 2010:

QUESTION: Good afternoon, Mr. O'Hara. Would you introduce yourself, please.

ANSWER: Yes. I'm Bob O'Hara.

QUESTION: And what happened after the Cisco acquisition for you personally? Did you go to

104

work at Cisco?

ANSWER: Yes. I continued as an employee of Cisco.

QUESTION: And what kind of work did you do?

ANSWER: To begin with, I was helping to integrate some proprietary functions that Cisco had in their own wireless LAN products into the Airespace controller and lightweight access point.

QUESTION: And how long did you continue working at Cisco?

ANSWER: I worked there for nearly three years.

QUESTION: All right. But we would know, don't we agree, that not only Cisco, but their lawyers would have been our notice of this '395 patent

sometime between 2001 and the issuance in '05, correct?

ANSWER: Yes.

QUESTION: In connection with the sales effort from 2003 forward of the accused products, was it ever the case that demonstrations of a running system were being made to customers to induce them to purchase it?

ANSWER: I made some demonstrations, yes.

QUESTION: And that was in order to help

make the sale to the customer, correct?

ANSWER: Yes, it was.

QUESTION: And that's what you would say, technical support by you to the sales group, right?

ANSWER: Yes.

QUESTION: So we have testing; we have demonstrations; we have involvement in the installations; testing again there. Are all of these things accurate?

ANSWER: Yes.

QUESTION: Don't Airespace and then later Cisco encourage customers to use the Split MAC functioning?

ANSWER: Yes.

QUESTION: Why do they do that?

ANSWER: I – I don't know why they do that.

QUESTION: Sir –

ANSWER: I can't speculate why they do anything.

QUESTION: Well, did Airespace do that?

ANSWER: Yes.

QUESTION: Why did Airespace encourage customers to use the Split MAC function?

ANSWER: We encouraged them to do that

* * *

IN THE UNITED STATES DISTRICT COURT
FOR THE EASTERN DISTRICT OF TEXAS
MARSHALL DIVISION

COMMIL USA	* Civil Docket No.
	* 2:07-CV-341
VS.	* Marshall, Texas
	*
	* April 8, 2011
CISCO SYSTEMS, INC., ET AL	* 12:45 P.M.

TRANSCRIPT OF JURY TRIAL
BEFORE THE HONORABLE CHAD EVERINGHAM
UNITED STATES MAGISTRATE JUDGE

APPEARANCES:

FOR THE PLAINTIFFS:

MR. MARK S. WERBNER
MR. RICHARD A. SAYLES
MR. MARK D. STRACHAN
Sayles Werbner
1201 Elm Street
4400 Renaissance Tower
Dallas, TX 75270

FOR THE DEFENDANTS:

MR. HENRY B. GUTMAN
(CISCO) MR. JEFFREY E. OSTROW
16 MR. HARRISON J. FRAHN, IV
MR. JONATHAN SANDERS
Simpson Thacher & Bartlett
2550 Hanover St.
Palo Alto, CA 94304

APPEARANCES CONTINUED ON NEXT PAGE:

COURT REPORTERS:

MS. SUSAN SIMMONS, CSR
MS. SHELLY HOLMES, CSR
Official Court Reporters
100 East Houston, Suite 125
Marshall, TX 75670
903/935-3868

(Proceedings recorded by mechanical stenography, transcript produced on CAT system.)

APPEARANCES CONTINUED:

* * * 98

If the accused methods omit even a single limitation, then you must find that the claim is not infringed. You must consider each of the patent claims separately.

As just discussed, direct infringement requires a single party to perform each and every step of a claimed method. If you find that each and every limitation of a patented claim is performed, then the claim is infringed, even if the accused methods of use may be more or less efficient or may include additional features or functions not found in the claims.

Whether or not the third party knew that what it was doing was an infringement does not matter for direct infringement. A person may be found to be a direct infringer of a patent even if his or her believed in good faith that what he or she was doing was not an infringement of any patent and even if he or she did not even know of the patent.

If you find that a third party has directly infringed Claim 1, 4, or 6 of the '395 patent, then Commil must prove by a preponderance of the evidence that Cisco actively and knowingly aided and abetted that direct infringement.

Furthermore, Commil must show that Cisco actually intended to cause the acts that constitute

direct infringement and that Cisco knew or should have known that its actions would induce actual infringement.

Inducing third-party infringement cannot occur unintentionally. This is different from direct infringement, which can occur unintentionally. Cisco also cannot be liable for inducing infringement if it was not aware of the existence of the patent.

If you find that a third party has directly infringed Claim 1, 4, or 6 of the '395 patent and that Cisco knew or should have known that its actions would induce direct infringement, you may find that Cisco induced another to infringe Commil's patent if it provided instructions and directions to perform the infringing act through labels, advertising, or other sales methods.

You may also find that Cisco induced infringement by supplying the components that are used in an infringing manner with the knowledge and intent that its customer would directly infringe by using the components to perform every step of the claimed method.

Now, the asserted claims use the word comprising. When a claim uses the word comprising, comprising means included -- or excuse me -- including or containing.

A claim that uses the word comprising or

comprises is not limited to products or methods having only the elements that are recited in the claim but also covers products or methods that add additional elements.

Let's take as an example a claim that covers a table. If the claim recites a table comprising a tabletop, legs, and glue, the claim will cover any table that contains these structures even if the table also contains other structures, such as a leaf or wheels on the legs.

Let's talk about dependent claims. My instructions on infringement so far have related to independent claims. Patent claims may exist in two forms referred to as independent claims and dependent claims.

An independent claim does not refer to any other claim of the patent. Thus, it is not necessary to look at any other claim to determine what an independent claim covers.

Claim 1 of the '395 patent is an independent claim.

A dependent claim refers to at least one other claim in the patent. A dependent claim includes each of the elements of the other claim to which it refers, plus additional elements recited in the dependent claim itself.

Claims 4 and 6 of the '395 patent are dependent claims that depend on Claim 1. In order for you to find that Claims 4 or 6 of the '395 patent are infringed, you must first find that Claim 1 is infringed.

If you find that independent Claim 1 of the '395 patent is not infringed, you must also find that dependent Claims 4 and 6 are not infringed.

I will now instruct you as to the calculation of damages should you find that Commil has met its burden on any of its claims.

If you find that Cisco has induced infringement of the asserted claims of Commil's patent, then you should consider the amount of money Commil should receive as damages.

Commil has the burden of proving by a preponderance of the evidence the amount of damages caused by Cisco's conduct. The owner of a patent is entitled to an award of damages adequate to compensate for the infringement, but in no event less than a reasonable royalty for the use Cisco made of the invention.

Commil is asking for damages in the amount of a reasonable royalty. Generally, a reasonable royalty is defined by the patent laws as the reasonable

* * *

OPPOSITION BRIEF

Supreme Court, U.S.
FILED
MAR 3 1 2014
OFFICE OF THE CLERK

No. 13-896

IN THE

Supreme Court of the United States

COMMIL USA, LLC,

Petitioner,

v.

CISCO SYSTEMS, INC.,

Respondent.

ON PETITION FOR A WRIT OF CERTIORARI TO THE UNITED STATES COURT OF APPEALS FOR THE FEDERAL CIRCUIT

BRIEF IN OPPOSITION

HENRY B. GUTMAN
SIMPSON THACHER & BARTLETT LLP
425 Lexington Avenue
New York, NY 10017

JEFFREY E. OSTROW
HARRISON J. FRAHN IV
PATRICK E. KING
JONATHAN SANDERS
SIMPSON THACHER & BARTLETT LLP
2550 Hanover Street
Palo Alto, CA 94304

WILLIAM F. LEE
Counsel of Record
MARK C. FLEMING
FELICIA H. ELLSWORTH
ERIC F. FLETCHER
WILMER CUTLER PICKERING HALE AND DORR LLP
60 State Street
Boston, MA 02109
(617) 526-6000
william.lee@wilmerhale.com

WILLIAM G. MCELWAIN
WILMER CUTLER PICKERING HALE AND DORR LLP
1875 Pennsylvania Ave., NW
Washington, DC 20006

QUESTIONS PRESENTED

In *Global-Tech Appliances, Inc.* v. *SEB S.A.*, 131 S. Ct. 2060, 2068 (2011), this Court ruled that a defendant cannot be held liable for actively inducing patent infringement unless the defendant has "knowledge that the induced acts constitute patent infringement." The questions presented are:

1. Whether evidence of a defendant's reasonable belief that a patent is invalid is relevant to the determination whether the defendant acted with "knowledge that the induced acts constitute patent infringement."

2. Whether the Federal Circuit correctly held that this Court's decision in *Global-Tech* abrogated inconsistent Federal Circuit precedent.

CORPORATE DISCLOSURE STATEMENT

Cisco Systems, Inc., has no parent corporation. To Cisco's knowledge, no publicly held company owns 10 percent or more of Cisco's stock.

TABLE OF CONTENTS

Page

QUESTIONS PRESENTED i

CORPORATE DISCLOSURE STATEMENT ii

TABLE OF AUTHORITIES v

STATEMENT 2

A. District Court Proceedings 2

B. Court Of Appeals Proceedings 5

REASONS FOR DENYING THE PETITION 7

I. A GOOD-FAITH BELIEF THAT A PATENT IS INVALID IS A DEFENSE TO A CLAIM OF INDUCED INFRINGEMENT 7

A. The Specific Intent Required To Prove Induced Infringement Can Be Negated By A Good-Faith Belief Of Invalidity 7

1. The accused infringer's good-faith belief of invalidity is a defense to the intent requirement of induced infringement 8

2. A good-faith belief of non-infringement is well-recognized as a defense, and invalidity should be treated no differently 10

B. The Issue Is Not Ripe For This Court's Review 13

II. THE FEDERAL CIRCUIT'S APPLICATION OF *GLOBAL-TECH* TO REVERSE THE DISTRICT COURT'S ERRONEOUS JURY INSTRUCTION IS CORRECT AND DOES NOT MERIT REVIEW 14

TABLE OF CONTENTS—Continued

Page

CONCLUSION 17

TABLE OF AUTHORITIES

CASES

Page(s)

ACCO Brands, Inc. v. *ABA Locks Manufacturer Co.*, 501 F.3d 1307 (Fed. Cir. 2007) 9

Broadcom Corp. v. *Qualcomm Inc.*, 543 F.3d 683 (Fed. Cir. 2008) 9

DSU Medical Corp. v. *JMS Co.*, 471 F.3d 1293 (Fed. Cir. 2006) 16

Ecolab, Inc. v. *FMC Corp.*, 569 F.3d 1335, *amended on reh'g in part*, 366 F. App'x 154 (Fed. Cir. 2009) 8, 11

Global-Tech Appliances, Inc. v. *SEB S.A.*, 131 S. Ct. 2060 (2011) ..... *passim*

In re Seagate Technology, LLC, 497 F.3d 1360 (Fed. Cir. 2007) 12

Kinetic Concepts, Inc. v. *Blue Sky Medical Group, Inc.*, 554 F.3d 1010 (Fed. Cir. 2009) 11

Medtronic, Inc. v. *Cardiac Pacemakers, Inc.*, 721 F.2d 1563 (Fed. Cir. 1983) 9

Metro-Goldwyn-Mayer Studios Inc. v. *Grokster, Ltd.*, 545 U.S. 913 (2005) 10

Pandrol USA, LP v. *Airboss Railway Products, Inc.*, 320 F.3d 1354 (Fed. Cir. 2003) 9

Prima Tek II, L.L.C. v. *Polypap, S.A.R.L.*, 412 F.3d 1284 (Fed. Cir. 2005) 6, 10

Richdel, Inc. v. *Sunspool Corp.*, 714 F.2d 1573 (Fed. Cir. 1983) 6, 9

TABLE OF AUTHORITIES—Continued

Page(s)

Vita-Mix Corp. v. *Basic Holding, Inc.*, 581 F.3d 1317 (Fed. Cir. 2009) 8, 11

Wisniewski v. *United States*, 353 U.S. 901 (1957) 2, 13

DOCKETED CASES

Cisco Systems, Inc. v. *Commil USA, LLC*, No. 13-1044 (U.S.) 7, 8

STATUTES AND RULES

35 U.S.C. § 271(b) 10, 15

S. Ct. R. 10 14

IN THE

Supreme Court of the United States

No. 13-896

COMMIL USA, LLC,

Petitioner,

v.

CISCO SYSTEMS, INC.,

Respondent.

ON PETITION FOR A WRIT OF CERTIORARI TO THE UNITED STATES COURT OF APPEALS FOR THE FEDERAL CIRCUIT

BRIEF IN OPPOSITION

Cisco Systems, Inc., respectfully submits that neither question presented by Commil USA, LLC's petition warrants this Court's review.

The Federal Circuit correctly recognized that evidence of a defendant's reasonable belief of a patent's invalidity is relevant to the specific intent required to induce infringement. This conclusion is nothing more than a straightforward application of this Court's decision in *Global-Tech Appliances, Inc.* v. *SEB S.A.*, 131 S. Ct. 2060 (2011), which establishes that intent to induce infringement requires "knowledge that the induced acts constitute patent infringement." *Id.* at 2068.

The panel opinion merely recognizes that an accused inducer cannot *know* that its customers infringe a patent if it has a reasonable basis for thinking the patent invalid. Commil claims (Pet. 14) that there are "conflicting Federal Circuit panel opinions" on this issue, but has not identified any actual conflict between the decision below and any other decision of the Federal Circuit. Moreover, even if such a conflict existed (which it does not), it would not be worthy of this Court's review. *See Wisniewski* v. *United States*, 353 U.S. 901, 902 (1957) (per curiam).

Commil's second question presented asks this Court to determine "whether *Global-Tech* overruled *en banc* Federal Circuit law" (Pet. 20 (capitalization altered))—an issue best addressed by the Federal Circuit. Not one Federal Circuit judge expressed any doubt on the matter when denying Commil's petition for rehearing en banc, and this Court does not grant review to determine the effect of its clearly-written decisions on lower court precedent. In any event, the Federal Circuit's grant of a new trial in light of the district court's legally erroneous jury instruction breaks no new ground, but simply applies this Court's decision in *Global-Tech* to the circumstances of this case.

STATEMENT

A. District Court Proceedings

Cisco is a global leader in the development and deployment of wireless networking systems for computers and other devices, and sells devices that provide wireless connectivity through the well-known "WiFi" wireless communication protocol. Commil, a company that does not develop or sell any products, but exists only to hold and monetize intellectual property, accused

Cisco of infringing a patent Commil purchased shortly before filing suit, U.S. Patent No. 6,430,395 ("the '395 patent"). A5821; A5805; A12552-12553.

In August 2007, Commil sued Cisco in the U.S. District Court for the Eastern District of Texas, asserting that Cisco infringed a method claim of the '395 patent. A1500-1502. Commil's claims were first tried to a jury in May 2010. That trial included Commil's assertions that Cisco directly infringed the patent by performing the claimed steps itself and that Cisco induced infringement by Cisco's customers, as well as Cisco's defenses that the asserted claim is invalid and not infringed by either Cisco or its customers. A135-138. The jury found Cisco liable for direct infringement, but not induced infringement, and rejected Cisco's invalidity defenses. A136-138.[1] The jury awarded Commil $3.7 million in damages despite Commil's failure to present evidence of damages for direct infringement. A139.

Over Cisco's objection, the district court ordered a new trial based on its conclusion that a statement by Cisco's local counsel "affected the jury's ability to discharge the functions for which they were empaneled in this case." A6057. The district court limited the partial retrial to the issues of indirect infringement and damages.

In the second, partial, retrial on induced infringement, Cisco sought to present evidence that its reasonable belief that the '395 patent was invalid negated the specific intent required for induced infringement. *See*

---

[1] The district court granted judgment as a matter of law to Cisco of no contributory infringement after Commil conceded that the accused products have substantial non-infringing uses. A19; A6004.

Global-Tech Appliances, Inc. v. *SEB S.A.*, 131 S. Ct. 2060, 2068 (2011) (induced infringement requires actual knowledge that the induced acts would constitute patent infringement). Commil moved *in limine* to preclude Cisco from presenting this evidence. Commil "expressly argued that it would *unduly confuse the jury* to admit [good-faith belief of invalidity] evidence *without also submitting the validity determination to it* to decide." Pet. App. 37a (O'Malley, J.) (first emphasis added). The district court agreed with Commil and, as a result, excluded any evidence of or argument regarding Cisco's good-faith belief of the patent's invalidity, over Cisco's objection and proffer. *Id.* 46a, 206a-208a; A6365.

During the second trial, Commil's evidence to establish that Cisco was aware of the patent before Commil instituted this lawsuit was limited to: (1) a single citation to the '395 patent in an unrelated patent application in a different technical field (cited before Cisco acquired and began selling the accused technology) (A12609; A12611; A12618; A12724); and (2) vague testimony during the second trial (but not the first) that the previous owner of the '395 patent had mentioned that his company held patents—without specifically mentioning the '395 patent—to an unnamed Cisco representative at some unspecified time (A6215-6217).

At the close of the second trial, over Cisco's objection (A6369), the district court instructed the jury that it could find inducement if Cisco "*knew or should have known* that its actions would induce actual infringement" (A6389 (emphasis added)). Commil specifically highlighted the erroneous "should have known" standard during its summation to the second jury. A6386. Cisco objected to the instruction during the charging conference (A6369), and renewed its objection to the

jury verdict in post-verdict motions (A36), after this Court's decision in *Global-Tech* conclusively established that mere negligence ("should have known") is insufficient to prove inducement, 131 S. Ct. at 2071-2072. Indeed, the district court here gave the very same "knew or should have known" instruction (Pet. App. 6a-7a) that this Court expressly disapproved of in its *Global-Tech* opinion, 131 S. Ct. at 2068, 2070-2072; *see also id.* at 2074 (Kennedy, J., dissenting).

The second jury found Cisco liable for induced infringement and awarded Commil $63.8 million in damages. A162-164. Despite Cisco raising the erroneous jury instruction as a basis for new trial after the verdict (A36), the district court denied Cisco's post-trial motions and entered final judgment against Cisco for $74 million including costs and interest (Pet. App. 48a-49a).

B. Court Of Appeals Proceedings

Cisco appealed, and the Federal Circuit affirmed in part, vacated in part, and remanded for further proceedings, with each member of the panel (Prost, Newman, and O'Malley, JJ.) writing separately.

The panel unanimously held that a new trial was required because the district court erroneously instructed the second jury that it could find induced infringement if Cisco "knew or should have known" its customers infringed—an instruction contrary to this Court's decision in *Global-Tech*—and that the error had a prejudicial effect requiring a new trial. Pet. App. 6a-10a (Prost, J.), 22a (Newman, J., concurring in part and dissenting in part), 28a (O'Malley, J., concurring in part and dissenting in part). Specifically, the panel noted that *Global-Tech* "held that induced infringement 'requires knowledge that the induced acts constitute pa-

tent infringement.'" Pet. App. 7a (quoting *Global-Tech*, 131 S. Ct. at 2068). The panel applied this Court's holding that a plaintiff alleging induced infringement must show "actual knowledge or willful blindness" (*id.* (citing *Global-Tech*, 131 S. Ct. at 2072)), and unanimously concluded that the "jury instruction plainly recite[d] a negligence standard, which taken literally, would allow the jury to find the defendant liable based on mere negligence" (Pet. App. 8a). The panel further unanimously held that the legal error in the jury instruction prejudiced Cisco because it "certainly could have changed the result" of the second trial (*id.* 9a-10a), as "[f]acts sufficient to support a negligence finding are not necessarily sufficient to support a finding of knowledge" (*id.* 10a).

A majority of the panel also concluded that Cisco was entitled to present evidence of its good-faith belief of the patent's invalidity to negate the required intent for Commil to prove its claim of induced infringement. Pet. App. 10a-13a (Prost, J.), 28a-29a (O'Malley, J.); *but see id.* 22a-27a (Newman, J.). The panel majority concluded that because "one cannot infringe an invalid patent" (*id.* 11a (citing *Prima Tek II, L.L.C.* v. *Polypap, S.A.R.L.*, 412 F.3d 1284, 1291 (Fed. Cir. 2005); *Richdel, Inc.* v. *Sunspool Corp.*, 714 F.2d 1573, 1580 (Fed. Cir. 1983))), "a good-faith belief of invalidity is evidence that may negate the specific intent to encourage another's infringement, which is required for induced infringement" (Pet. App. 12a).

Commil petitioned for rehearing en banc, challenging the panel's ruling on both the jury instruction and the good-faith belief of invalidity.[2] The Federal Circuit

---

[2] Cisco also petitioned for panel rehearing and rehearing en banc, challenging the panel's holding permitting a partial retrial of

denied Commil's petition for rehearing en banc over the dissent of five judges. Pet. App. 53a (Reyna, J., joined by Rader, C.J., Newman, Lourie, and Wallach, JJ.), 61a (Newman, J., joined by Rader, C.J., and Wallach, J.).

REASONS FOR DENYING THE PETITION

I. A GOOD-FAITH BELIEF THAT A PATENT IS INVALID IS A DEFENSE TO A CLAIM OF INDUCED INFRINGEMENT

A. The Specific Intent Required To Prove Induced Infringement Can Be Negated By A Good-Faith Belief Of Invalidity

The Federal Circuit's determination that a defendant accused of induced infringement may oppose the charge that it specifically intended to induce infringement by pointing to a reasonable belief that the patent was invalid is correct and does not warrant this Court's consideration. As the panel majority noted (Pet. App. 12a-13a & n.1), this is not to say that belief of the patent's invalidity *precludes* a finding of induced infringement; rather, it is simply a recognition that a reasonable belief of the invalidity of the patent-in-suit is *relevant* in determining whether the accused infringer had the specific intent to induce infringement required by the statute and reaffirmed in this Court's decision in *Global-Tech*.[3]

---

induced infringement without a retrial of invalidity, which Cisco had argued violates the Seventh Amendment. Cisco's petition was also denied by the Federal Circuit. The panel's Seventh Amendment holding is the subject of Cisco's conditional cross-petition in No. 13-1044.

[3] Commil's framing of the argument as relating to a "mistaken" belief of invalidity is a non sequitur. Pet. 11. It is only because of the strange procedural posture of this case—a posture that violates the Seventh Amendment of the Constitution, as explained in

1. The accused infringer's good-faith belief of invalidity is a defense to the intent requirement of induced infringement

After noting that "[u]nder our case law, it is clear that a good-faith belief of non-infringement is relevant evidence that tends to show that an accused inducer lacked the intent required to be held liable for induced infringement" (Pet. App. 11a (citing cases)), the panel correctly ruled that there is "no principled distinction between a good-faith belief of invalidity and a good-faith belief of non-infringement for the purpose of whether a defendant possessed the specific intent to induce infringement of a patent" (*id.* 10a). Nothing in Commil's petition calls the correctness of that holding into question.

As in its briefing and argument before the Federal Circuit and in its petition for rehearing, Commil fails to appreciate the distinction between *direct* infringement and *induced* infringement. This is a crucial difference: while direct infringement—a strict liability tort—can be committed despite the infringer's reasonable belief of the patent's invalidity, induced infringement can be

---

Cisco's conditional cross-petition—that a jury will be required to determine whether Cisco's good-faith belief of the patent's invalidity negates the specific intent to induce infringement without also being asked to determine whether the patent is in fact invalid. *See* Conditional Cross-Pet. 16-19, No. 13-1044. In any event, the Federal Circuit has repeatedly confirmed findings of no induced infringement where defendants "reasonably believed" that there was no infringement, even where the defendants were later found to infringe. *See, e.g.*, *Vita-Mix Corp.* v. *Basic Holding, Inc.*, 581 F.3d 1317, 1329 (Fed. Cir. 2009); *Ecolab, Inc.* v. *FMC Corp.*, 569 F.3d 1335, 1351, *amended on reh'g in part*, 366 F. App'x 154 (Fed. Cir. 2009).

proven only upon a showing of the requisite state of mind. *Global-Tech*, 131 S. Ct. at 2068.

The difference in intent required for direct and induced infringement disposes of most of Commil's arguments and distinguishes its authorities. *Medtronic, Inc.* v. *Cardiac Pacemakers, Inc.*, 721 F.2d 1563 (Fed. Cir. 1983), involved only direct infringement, and the Federal Circuit's uncontroversial observation in that case that infringement and validity are separate questions does not foreclose invalidity from affecting the state of mind of an accused *inducer*. *See* Pet. 13 (citing *Medtronic*, 721 F.2d at 1583; *Pandrol USA, LP* v. *Airboss Ry. Prods., Inc.*, 320 F.3d 1354, 1365 (Fed. Cir. 2003)).

Indeed, Commil's argument that a reasonable belief of invalidity cannot be a defense to inducement ignores *Global-Tech*, which does not view inducement in a vacuum, but rather establishes that intent to induce infringement requires "knowledge that the induced acts constitute *patent infringement*." 131 S. Ct. at 2068 (emphasis added). Unchallenged precedent establishes that "patent infringement" cannot exist if the asserted patent is invalid. *See, e.g., Richdel, Inc.* v. *Sunspool Corp.*, 714 F.2d 1573, 1580 (Fed. Cir. 1983) ("The claim being invalid there is nothing to be infringed."). Likewise, imposing liability upon "whoever actively induces infringement" requires a showing of intent amounting to "actual knowledge" or "willful blindness." *Global-Tech*, 131 S. Ct. at 2068-2069; *see also Broadcom Corp.* v. *Qualcomm Inc.*, 543 F.3d 683, 697 (Fed. Cir. 2008) (accused infringer must possess "'specific intent to encourage another's infringement'" (quoting *ACCO Brands, Inc.* v. *ABA Locks Mfr. Co.*, 501 F.3d 1307, 1312 (Fed. Cir. 2007))). To demonstrate this specific intent requires not only knowledge of the patent's ex-

istence, but also knowledge that the allegedly induced acts will amount to infringement of a *valid* patent. *See Prima Tek II, L.L.C.* v. *Polypap, S.A.R.L.*, 412 F.3d 1284, 1291 (Fed. Cir. 2005) ("there can be no ... induced infringement of invalid patent claims"). The panel opinion does nothing more than recognize that an accused inducer cannot know that its customers infringe a valid patent if it has a reasonable basis for thinking the patent invalid.[4] Commil's arguments to the contrary (Pet. 15-17) are without merit and ignore this Court's clear statements in *Global-Tech* concerning the proper reach and interpretation of 35 U.S.C. § 271(b).

2. A good-faith belief of non-infringement is well-recognized as a defense, and invalidity should be treated no differently

The Federal Circuit has long recognized that a good-faith belief of non-infringement is a permissible defense to a claim of induced infringement. Pet. App. 11a (a good-faith belief of non-infringement "is relevant evidence that tends to show that an accused inducer lacked the intent required to be held liable for induced infringement"). Neither Commil nor any of the dissenting judges in the Federal Circuit call this into question. Indeed, the Federal Circuit has upheld findings of no induced infringement, "even though [the defendant's]

---

[4] For example, if a car manufacturer were aware of a plainly invalid patent that covered a method of driving a car, which the purchaser of its car would clearly infringe, the car manufacturer could not specifically intend to induce its customers' infringement because of the patented method's clear invalidity. "The inducement rule ... premises liability on purposeful, culpable expression and conduct" that is not present in such a case. *Metro-Goldwyn-Mayer Studios Inc.* v. *Grokster, Ltd.*, 545 U.S. 913, 937 (2005) (applying patent inducement rule to copyright).

product was ultimately found to infringe," where the jury had substantial evidence from which to conclude that the defendant lacked the intent required for induced infringement because the defendant "reasonably believed that the use of [its product] would not infringe." *Ecolab, Inc.* v. *FMC Corp.*, 569 F.3d 1335, 1351, *amended on reh'g in part*, 366 F. App'x 154 (Fed. Cir. 2009); *see also Kinetic Concepts, Inc.* v. *Blue Sky Med. Group, Inc.*, 554 F.3d 1010, 1024-1025 (Fed. Cir. 2009) (affirming jury verdict of no induced infringement where "[t]he jury heard [defendant's] founders explain why they did not believe they were infringing"); *Vita-Mix Corp.* v. *Basic Holding, Inc.*, 581 F.3d 1317, 1329 (Fed. Cir. 2009) ("The original product instructions do not evidence a specific intent to encourage infringement, since they teach a stirring action which Basic could have reasonably believed was non-infringing.").

Commil contends that a reasonable belief of non-infringement is a valid defense while a reasonable belief of invalidity is not because "'infringement and noninfringement are opposite sides of the same coin whereas infringement and invalidity are altogether entirely different coins.'" Pet. 16-17 (quoting Pet. App. 58a). But that misdirection is without merit. A reasonable belief of non-infringement or invalidity, while irrelevant to the question of *actual* infringement or invalidity, is most certainly relevant to the *intent* requirement of induced infringement, which requires the defendant to have "knowledge that the induced acts constitute patent infringement." *Global-Tech*, 131 S. Ct. at 2068. Where knowledge of patent infringement is required, no principled distinction can be drawn between a defense based on a reasonable belief of non-infringement and a defense based on a reasonable belief of invalidity.

Indeed, Commil identifies no difference between the many cases in which a reasonable belief of non-infringement has been credited by a jury or a court as negating the intent required for induced infringement and this case, where Cisco's reasonable belief of the invalidity of Commil's patent is "relevant evidence" that Cisco lacks the specific intent required for induced infringement. Pet. App. 11a. Commil offers dire predictions about the effect the panel's common-sense holding will have on patent protection (Pet. 19), but its arguments would apply with equal force to a defense based on a reasonable belief of non-infringement, which has long been recognized as a defense to inducement.[5]

Commil's argument is further weakened by the fact that a reasonable belief of invalidity is recognized as a defense to a charge of willful infringement. *See In re Seagate Tech., LLC*, 497 F.3d 1360, 1371 (Fed. Cir. 2007) (en banc) ("[T]o establish willful infringement, a patentee must show ... that the infringer acted despite an objectively high likelihood that its actions constituted infringement of a *valid* patent." (emphasis added)). Commil's attempts (Pet. 17-18) to distinguish willful infringement from induced infringement are woefully inadequate. Commil argues that because willful infringement requires a higher level of culpability than induced infringement, "a defendant has more defenses to a willfulness allegation (e.g., a good faith belief in invalidity) than to an inducement charge." *Id.* 18. This nonsensical statement underscores the false distinction

---

[5] Similarly, Commil's argument (Pet. 15-16) that allowing a reasonable belief of invalidity to serve as a defense to induced infringement violates tort principles would apply equally to a defense of reasonable belief of non-infringement, the legitimacy of which neither Commil nor the dissenting Federal Circuit judges challenge.

upon which Commil's argument relies—while a plaintiff faces a more demanding burden of proof to establish that a defendant acted with the greater culpability required for a finding of willful infringement than for induced infringement, that does not mean that a defendant should be hamstrung in its ability to demonstrate that it did not possess whatever level of culpability is required. An accused induced infringer must be allowed to present, in rebuttal to a charge of specific intent, any evidence that tends to negate that specific intent—whether or not such evidence is also a recognized defense to a charge of willfulness.

B. The Issue Is Not Ripe For This Court's Review

Commil's assertion that the Federal Circuit has created "confusion" through "conflicting Federal Circuit panel opinions" is not a basis for certiorari. Pet. 14. The Federal Circuit could have corrected any such "confusion"—if it existed—on en banc review, but a majority of the Federal Circuit recognized that there was no conflict and therefore en banc review was not warranted. Moreover, the panel opinion is now governing precedent on the point, so there can be no confusion: evidence of a good-faith belief of invalidity can be asserted as a defense to negate the specific intent required to induce infringement. Finally, even if there were a conflict, this Court's practice is not to wade into intra-circuit conflicts. *See Wisniewski* v. *United States*, 353 U.S. 901, 902 (1957) (per curiam).

Likewise, Commil's suggestion (Pet. 18) that the Federal Circuit's ruling will spawn extensive litigation also counsels in favor of denying certiorari to allow development of this issue in the lower courts. There is no need for this Court to confront this question now, when

there is no indication that the Federal Circuit's ruling has created any problems. If Commil's unsubstantiated predictions materialize, the issue will arise when it is properly presented in the future.

II. THE FEDERAL CIRCUIT'S APPLICATION OF *GLOBAL-TECH* TO REVERSE THE DISTRICT COURT'S ERRONEOUS JURY INSTRUCTION IS CORRECT AND DOES NOT MERIT REVIEW

The judges of the Federal Circuit were unanimous in their conclusion that the district court's jury instruction concerning the required culpability for a finding of induced infringement was erroneous and required a new trial before a properly instructed jury. This ruling was unquestionably a correct application of this Court's decision in *Global-Tech*. Even if it were not, the factbound application of *Global-Tech* to a specific jury instruction in a specific case does not merit this Court's attention. This Court does not review case-specific applications of correctly stated rules. *See* S. Ct. R. 10.

Commil does not seriously contest that the district court's jury charge—instructing the jury that Cisco could be liable for induced infringement if it "should have known" that its customers infringed Commil's patent (Pet. App. 239a)—improperly allowed the jury to find inducement if it concluded that Cisco was merely negligent. And for good reason: the "should have known" jury instruction given by the district court is flatly inconsistent with the requirement that inducement liability have "an appropriately limited scope that surpasses recklessness and negligence." *Global-Tech*, 131 S. Ct. at 2070. Indeed, this Court specifically disapproved of the very standard that the district court recited in its jury instruction in this case. *Id.* at 2071

(rejecting "[t]he test applied by the Federal Circuit in this case ... [because] it permits a finding of knowledge when there is merely a 'known risk' that the induced acts are infringing").

Instead, Commil suggests that other aspects of the jury instruction somehow "cured" this clear defect (Pet. 21-22) or that any error was harmless (*id.* 22 n.2). Apart from being untrue, this is beside the point: There is no reason for this Court to review the Federal Circuit's fact-specific determination that the district court's error was not cured and was not harmless in the context of this particular case.

Commil also attempts (Pet. 24-26) to read *Global-Tech* as though it decided only the narrow question whether inducement liability requires actual knowledge of the patent's existence. But this Court's holding in *Global-Tech* is not so limited. This Court expressly stated: "[W]e now hold that induced infringement under § 271(b) requires knowledge *that the induced acts constitute patent infringement.*" 131 S. Ct. at 2068 (emphasis added); *see also* Pet. App. 9a ("A finding of inducement requires both knowledge of the existence of the patent and 'knowledge that the induced acts constitute patent infringement.'" (quoting *Global-Tech*, 131 S. Ct. at 2068)).

The reasoning of *Global-Tech* only confirms the breadth of the holding. In *Global-Tech*, this Court disapproved of an approach that "permit[ted] a finding of knowledge when there is merely a 'known risk' that the induced acts are infringing," and also stated that inducement liability under a "willful blindness" theory "require[s] active efforts by an inducer to avoid knowing about the *infringing nature* of the activities." 131 S. Ct. at 2071 (emphasis added). And the ultimate af-

firmance of the defendant's liability for inducement in *Global-Tech* depended on the conclusion (stated twice) that the defendant "willfully blinded itself to the *infringing nature*" of a third party's sales. *Id.* at 2071, 2072 (emphasis added). Thus *Global-Tech* required not only knowledge of the patent's existence, but also actual knowledge of (or willful blindness to) "the infringing nature of the activities," i.e., that the third party's conduct constituted infringement.

Commil also suggests (Pet. 22-26) that the panel somehow erred in concluding that *Global-Tech* partially abrogated the Federal Circuit's prior decision in *DSU Medical Corp.* v. *JMS Co.*, 471 F.3d 1293, 1306 (Fed. Cir. 2006) (en banc), to the extent that decision approved a "should have known" standard. But there is no need for this Court to review a decision in which the Federal Circuit brings its jurisprudence into conformity with this Court's decisions. The Federal Circuit was certainly not barred from recognizing *DSU*'s partial abrogation simply because this Court's opinion in *Global-Tech* did not expressly state that it was overruling *DSU*. The courts of appeals are expected to recognize when a decision of this Court overrules their precedents. Indeed, not one judge on the Federal Circuit voiced the opinion that *DSU*'s partial abrogation warranted en banc rehearing; it certainly does not warrant certiorari.

CONCLUSION

The petition for a writ of certiorari should be denied.

Respectfully submitted.

HENRY B. GUTMAN
SIMPSON THACHER & BARTLETT LLP
425 Lexington Avenue
New York, NY 10017

JEFFREY E. OSTROW
HARRISON J. FRAHN IV
PATRICK E. KING
JONATHAN SANDERS
SIMPSON THACHER & BARTLETT LLP
2550 Hanover Street
Palo Alto, CA 94304

WILLIAM F. LEE
Counsel of Record
MARK C. FLEMING
FELICIA H. ELLSWORTH
ERIC F. FLETCHER
WILMER CUTLER PICKERING HALE AND DORR LLP
60 State Street
Boston, MA 02109
(617) 526-6000
william.lee@wilmerhale.com

WILLIAM G. MCELWAIN
WILMER CUTLER PICKERING HALE AND DORR LLP
1875 Pennsylvania Ave., NW
Washington, DC 20006

MARCH 2014

REPLY BRIEF

Supreme Court, U.S.
FILED
OCT 31 2014
OFFICE OF THE CLERK

Nos. 13-896, 13-1044

In The
Supreme Court of the United States

COMMIL USA, LLC,

Petitioner/Cross-Respondent,

v.

CISCO SYSTEMS, INC.,

Respondent/Cross-Petitioner.

ON PETITION AND CONDITIONAL CROSS-PETITION FOR WRIT OF CERTIORARI TO THE UNITED STATES COURT OF APPEALS FOR THE FEDERAL CIRCUIT

REPLY BRIEF OF PETITIONER/CROSS-RESPONDENT TO BRIEF FOR THE UNITED STATES AS AMICUS CURIAE

Mark S. Werbner
Counsel of Record
Richard A. Sayles
Mark D. Strachan
Darren P. Nicholson
SAYLES | WERBNER
4400 Renaissance Tower
1201 Elm Street
Dallas, Texas 75270
(214) 939-8700
mwerbner@swtriallaw.com

Leslie V. Payne
Nathan J. Davis
Miranda Y. Jones
HEIM, PAYNE & CHORUSH
JP Morgan Chase Tower
600 Travis, Suite 6710
Houston, Texas 77002
(713) 221-2000

Counsel for Respondent

Dated: October 31, 2014

THE LEX GROUP DC • 1825 K Street, N.W. • Suite 103 • Washington, D.C. 20006
(202) 955-0001 • (800) 856-4419 • Fax: (202) 955-0022 • www.thelexgroup.com

TABLE OF CONTENTS

Page

TABLE OF AUTHORITIES ii

I. There is Substantial Confusion About The Meaning of *Global-Tech*'s Statement That "[I]nduced Infringement Under § 271(b) Requires Knowledge That The Induced Acts Constitute Patent Infringement," And Its Resolution Is "Important" 1

II. Commil's Second Proposed Question Addresses How To Interpret This Aspect of *Global-Tech* And Resolving It Would Provide Clarity Beyond This Case 4

A. Commil Presented The Question Of How *Global-Tech* Should Be Interpreted And Challenges the Federal Circuit's Interpretation 4

B. Review of the *Commil* Jury Instructions Will Be Applicable To All Inducement Cases 6

III. CONCLUSION 8

TABLE OF AUTHORITIES

Page(s)

CASES

DSU Medical Corp. v. JMS Co.,
471 F.3d 1293 (Fed. Cir. 2006) 7-8

Global-Tech Appliances, Inc. v. SEB S.A.,
131 S. Ct. 2060 (2011) ..... *passim*

STATUTE

35 U.S.C. § 271(b) ..... *passim*

Petitioner Commil USA, LLC, respectfully submits this reply to the Brief for the United States as Amicus Curiae (hereinafter "U.S. Br.").

Commil agrees with the Solicitor General's recommendation that this Court grant Commil's petition on the first question presented: whether a good-faith belief that a patent is invalid is a defense to inducement liability under Section 271(b). *See* U.S. Br. at 7. As the Solicitor General's brief ably explains, the Federal Circuit panel majority's creation of this new defense is "inconsistent with the Patent Act's text and structure, and it may undermine Section 271(b)'s efficacy as a means of deterring and remedying infringement." *Id.*

Commil also agrees with the Solictor General's recommendation that this Court deny Cisco's conditional cross-petition in No. 13-1044.

Commil files this reply to respond to the Solicitor General's recommendation that the second question in Commil's petition be denied.

I. There is Substantial Confusion About The Meaning of *Global-Tech*'s Statement That "[I]nduced Infringement Under § 271(b) Requires Knowledge That The Induced Acts Constitute Patent Infringement," And Its Resolution Is "Important"

The Solicitor General's brief correctly explains the confusion existing in the wake of *Global-Tech Appliances, Inc. v. SEB S.A.*, 131 S. Ct. 2060 (2011):

> *Global-Tech* clearly establishes that a defendant may be held liable under Section 271(b) only if it knew about the patent at issue. *Global-Tech* does not clearly resolve, however, whether the defendant must additionally possess actual knowledge that the induced conduct constitutes infringement. On the one hand, certain passages in *Global-Tech* suggest that Section 271(b) requires only knowledge of (or willful blindness to) the patent's *existence*. See, *e.g.*, 131 S. Ct. at 2068 ("[W]e proceed on the premise that [Section] 271(c) requires knowledge of the existence of the patent that is infringed. Based on this premise, it follows that the same knowledge is needed for induced infringement under [Section] 271(b)."). On the other hand, prominent passages in *Global-Tech* suggest that Section 271(b) additionally requires proof that the defendant knew the induced conduct to be infringing. See, *e.g.*, 131 S. Ct. at 2068 ("[W]e now hold that induced infringement under [Section] 271(b) requires knowledge that the induced acts constitute patent infringement."). The factual circumstances of *Global-Tech* did not require the Court to choose between those two potential understandings of Section 271(b)'s scienter requirement.

U.S. Br. at 9-10.

The Solicitor General also correctly notes that it is an open question after *Global-Tech* whether "Section 271(b) requires knowledge that the induced conduct actually constituted infringement" or whether "Section 271(b) simply requires knowledge of the patent's existence, alone or in combination with knowledge that the patentee views the induced conduct as infringing." *Id.* at 18. The Solicitor General's brief suggests that the latter approach is correct under this Court's decision in *Aro II* and preferable as a matter of patent policy. *See id.* at 19-20.

This question is "an important one that would warrant this Court's review in an appropriate case." U.S. Br. at 20. As the Solicitor General notes, scienter-based defenses are raised in essentially every patent case involving an inducement claim, and under the former approach "it will be difficult for the patentee to prove that the defendant's belief was not genuine," which "would render Section 271(b) substantially less effective in preventing and redressing violations of the patent holder's exclusive rights." *See id.* at 14, 20. Simply put, both patent owners and potential infringers need to know whether Section 271(b) has teeth.

II. Commil's Second Proposed Question Addresses How To Interpret This Aspect of *Global-Tech* And Resolving It Would Provide Clarity Beyond This Case

The Solicitor General recommends that the Court decline to hear Commil's second question for two reasons: (1) "Commil does not challenge the Federal Circuit's understanding of the legal rule announced in *Global-Tech*" (U.S. Br. at 17); and (2) "The court's assessment of the ultimate import of the jury instructions is unlikely to have implications beyond this case" (*id.* at 18). Commil respectfully disagrees on both points.

A. *Commil Presented The Question Of How* Global-Tech *Should Be Interpreted And Challenges the Federal Circuit's Interpretation*

The jury was instructed that it could find Cisco liable for inducement if it concluded that Cisco (1) "actually intended to cause the acts that constitute direct infringement," (2) was "aware of the patent," and (3) "knew or should have known that its actions would induce actual infringement." Pet. App. 238a-239a. The Federal Circuit held that these instructions were erroneous in light of *Global-Tech*. *Id.* at 8a.

The focal point of the Federal Circuit opinion (and Cisco's briefing) was the sentence that the Solicitor General correctly identifies as the source of substantial confusion: "[W]e now hold that induced infringement under § 271(b) requires knowledge that

the induced acts constitute patent infringement." *Global-Tech*, 131 S. Ct. at 2068; *see also* Pet. App. 7a (quoting the same); Cisco C.A. Br. at 36 (quoting the same); Br. in Opp. at 15 (quoting the same).[1] Commil vigorously disputed the proposition that this sentence of *Global-Tech* should be interpreted in a manner that rendered the jury instructions erroneous, and pressed this argument in its petition. Commil C.A. Br. at 38-43 (arguing that the instructions were consistent with *Global-Tech*); Pet. at 3-4, 22-26.

In light of this, the Solicitor General's statement that "Commil does not challenge the Federal Circuit's understanding of the legal rule announced in *Global-Tech*" (U.S. Br. at 17) is, respectfully, incorrect. The Solicitor General's views on this point presumably stem from the fact that Commil has never disputed that the words in the key sentence appear on the pages of the *Global-Tech* opinion. For example, the Solicitor General states that Commil (1) "conceded that *Global-Tech* held that Section 271(b) requires 'knowledge that the induced acts constitute patent infringement' ...." (*id.* at 17); and (2) "agrees with the Federal Circuit that, under *Global-Tech*, 'induced infringement * * * requires knowledge that the induced acts constitute patent infringement" (*id.* at 17-18). The embedded quotations in each sentence are taken verbatim from *Global-Tech*. All Commil "conceded" or agreed to was

---

[1] Consistent with the Brief for the United States, references to "Pet.," "Pet. App." and "Br. in Opp." are to the petition, petition appendix, and brief in opposition filed in No. 13-896. "Cisco C.A. Br." and "Commil C.A. Br." refer to briefs filed in the Federal Circuit.

that the language was written in the *Global-Tech* opinion—a proposition that no reasonable attorney could contest. There is a significant and very live dispute about the legal rule that should be gleaned from those words and that is the very dispute Commil raised at the Federal Circuit and in its petition for a writ of certiorari.

B. *Review of the* Commil *Jury Instructions Will Be Applicable To All Inducement Cases*

Granting review of Commil's second question provides an opportunity for the Court to clearly resolve the question of what, if anything, beyond knowledge of the patent's existence is necessary to satisfy the intent requirement for inducement. This is a question that must be addressed in the jury instructions in every inducement case, and the Solicitor General's brief acknowledges that it "is an important one that would warrant this Court's review in an appropriate case." U.S. Br. at 20. This case is appropriate because the jury instructions "implicate[]" this question, as the Solicitor General's brief acknowledges. *Id.* at 18. The instructions squarely set forth an approach within the continuum of possible standards identified by the Solicitor General, and whether this Court blesses or rejects the instructions given in this case will provide substantial guidance to future litigants.

The Solicitor General's brief suggested three possible scienter requirements for inducement (all of which would be required in addition to a showing

that the defendant intended to cause the third party's acts):

> (1) Knowledge of the patent's existence alone (*id.* at 18);
>
> (2) Knowledge of the patent's existence "in combination with knowledge that the patentee views the induced conduct as infringing" (*id.*);
>
> (3) Knowledge of the patent's existence in combination with actual subjective knowledge that the induced conduct actually constitutes infringement (*i.e.*, falls within the scope of the claims) (*id.*).

In the present case, the jury was instructed in accordance with a fourth possibility, namely, that the alleged inducer must be "aware of the patent," (*i.e.*, have knowledge of the patent's existence) and that it must also have "kn[o]w[n] or should have known that its actions would induce actual infringement." Pet App. 238a-239a. In terms of the level of scienter required, the given instruction is on the spectrum between the Solicitor General's most lenient (knowledge of the patent alone) and most rigid (actual subjective knowledge of actual infringement) potential standards. The given instruction also tracks the level of scienter chosen by the Federal Circuit in the *en banc DSU* case. *DSU Medical Corp. v. JMS Co.*, 471 F.3d 1293, 1305-06,

1311 (Fed. Cir. 2006) (approving instruction using the "knew or should have known" language where knowledge of the patent was undisputed).

Reviewing the propriety of the given instruction presents a straightforward opportunity for the Court to clearly answer the question that the Solicitor General and Commil both believe was left unresolved by *Global-Tech*, namely, whether a defendant that knew about the patent at issue "must additionally possess actual knowledge that the induced conduct constitutes infringement." U.S. Br. at 9. This, like the question of whether subjective beliefs about invalidity are relevant to the intent requirement, is of critical importance to district courts and litigants in every case involving a claim under § 271(b). *Id.* at 20; *cf. id.* at 14.

III. CONCLUSION

Commil's petition for a writ of certiorari in No. 13-896 should be granted on both questions presented. Cisco's conditional cross-petition in No. 13-1044 should be denied.

Respectfully Submitted,

SAYLES | WERBNER
Mark S. Werbner
Counsel of Record
Richard A. Sayles
Mark D. Strachan
Darren P. Nicholson
4400 Renaissance Tower
1201 Elm Street
Dallas, TX 75270
(214) 939-8700
(mwerbner@swtriallaw.com)

HEIM, PAYNE & CHORUSH
Leslie V. Payne
Nathan J. Davis
Miranda Y. Jones
JP Morgan Chase Tower
600 Travis, Suite 6710
Houston, TX 77002
(713) 221-2000

October 31, 2014

AMICUS CURIAE BRIEF

Supreme Court, U.S.
FILED
OCT 16 2014
OFFICE OF THE CLERK

Nos. 13-896 and 13-1044

In the Supreme Court of the United States

COMMIL USA, LLC, PETITIONER

v.

CISCO SYSTEMS, INC.

CISCO SYSTEMS, INC., PETITIONER

v.

COMMIL USA, LLC

ON PETITION AND CONDITIONAL CROSS-PETITION FOR A WRIT OF CERTIORARI TO THE UNITED STATES COURT OF APPEALS FOR THE FEDERAL CIRCUIT

BRIEF FOR THE UNITED STATES AS AMICUS CURIAE

DONALD B. VERRILLI, JR.
Solicitor General
Counsel of Record
JOYCE R. BRANDA
Acting Assistant Attorney General
MALCOLM L. STEWART
Deputy Solicitor General
GINGER D. ANDERS
Assistant to the Solicitor General
MARK R. FREEMAN
THOMAS PULHAM
Attorneys
Department of Justice
Washington, D.C. 20530-0001
SupremeCtBriefs@usdoj.gov
(202) 514-2217

SARAH T. HARRIS
General Counsel
NATHAN K. KELLEY
Solicitor
THOMAS W. KRAUSE
Deputy Solicitor
FRANCES M. LYNCH
BRIAN T. RACILLA
Associate Solicitors
United States Patent and Trademark Office
Alexandria, Va. 22313

QUESTIONS PRESENTED

Under 35 U.S.C. 271(b), "[w]hoever actively induces infringement of a patent shall be liable as an infringer." The questions presented are as follows:

1. Whether a good-faith belief that a patent is invalid is a defense to inducement liability under Section 271(b).

2. Whether the district court erred in instructing the jury that the defendant could be held liable under Section 271(b) if it "knew or should have known that its actions would induce actual infringement."

3. Whether the court of appeals correctly held that ordering a partial retrial on the issue of inducement liability, without also retrying the validity of the patent in suit, is consistent with the Seventh Amendment.

TABLE OF CONTENTS

Page

Interest of the United States 1
Statement 1
Discussion 6
I. The Court should grant the first question presented in No. 13-896 7
A. This Court should review the Federal Circuit's ruling that a good-faith belief that a patent is invalid may negate the scienter required for liability under Section 271(b) 7
B. Commil's challenge to the Federal Circuit's interpretation of the jury instructions does not warrant this Court's review 16
II. The petition in No. 13-1044 should be denied 21
Conclusion 24

TABLE OF AUTHORITIES

Cases:

Aro Mfg. Co. v. *Convertible Top Replacement Co.*, 377 U.S. 476 (1964) 7, 8, 15
Bankers Life & Cas. Co. v. *Holland*, 346 U.S. 379 (1953) 22
Bell v. *Wolfish*, 441 U.S. 520 (1979) 21
Bettcher Indus., Inc. v. *Bunzl USA, Inc.*, 661 F.3d 629 (Fed. Cir. 2011) 20
Bill of Lading Transmission and Processing Sys. Patent Litig., In re, 681 F.3d 1323 (Fed. Cir. 2012) 10
DSU Med. Corp. v. *JMS Co., Ltd.*, 471 F.3d 1293 (Fed. Cir. 2006) 10, 13
Gasoline Prods. Co. v. *Champlin Ref. Co.*, 283 U.S. 494 (1931) 5, 6, 21, 22
Global-Tech Appliances, Inc. v. *SEB S.A.*, 131 S. Ct. 2060 (2011) ..... *passim*

Cases—Continued: Page

Limelight Networks, Inc. v. *Akamai Techs., Inc.*, 134 S. Ct. 2111 (2014) 10
MedImmune, Inc. v. *Genentech, Inc.*, 549 U.S. 118 (2007) 20
Medtronic, Inc. v. *Cardiac Pacemakers, Inc.*, 721 F.2d 1563 (Fed. Cir. 1983) 13
Metro-Goldwyn-Mayer Studios Inc. v. *Grokster, Ltd.*, 545 U.S. 913 (2005) 15
Microsoft Corp. v. *i4i Ltd. P'ship*, 131 S. Ct. 2238 (2011) 13
Prima Tek II, L.L.C. v. *Polypap, S.A.R.L.*, 412 F.3d 1284 (Fed. Cir. 2005) 12
Richdel, Inc. v. *Sunspool Corp.*, 714 F.2d 1573 (Fed. Cir. 1983) 12
Spectra-Physics, Inc. v. *Coherent, Inc.*, 827 F.2d 1524 (Fed. Cir.), cert. denied, 484 U.S. 954 (1987) 13

Constitution, statutes and rule:

U.S. Const. Amend. VII 5, 21, 22
Patent Act of 1952, 35 U.S.C. 1 *et seq.*:
35 U.S.C. 271(a) 2, 7, 10, 11, 12, 15
35 U.S.C. 271(b) ..... *passim*
35 U.S.C. 271(c) 8, 15, 19
35 U.S.C. 281 2
35 U.S.C. 282 7
35 U.S.C. 282(b)(1) 7, 13, 14
35 U.S.C. 282(b)(2) 8, 13
35 U.S.C. 282(b)(3) 8
35 U.S.C. 284 2
Fed. R. Civ. P. 59(a)(1)(A) 21

Miscellaneous: Page

Brian D. Coggio, *Avoid Inducement Liability With Early Opinion Of Counsel* (Mar. 21, 2014), http://www.law360.com/articles/516267/avoid-inducement-liability-with-early-opinion-of-counsel 14

H.R. 5988, 80th Cong., 2d Sess. (1948) 15

H.R. 3866, 81st Cong., 1st Sess. (1949) 15

In the Supreme Court of the United States

No. 13-896

COMMIL USA, LLC, PETITIONER

v.

CISCO SYSTEMS, INC.

No. 13-1044

CISCO SYSTEMS, INC., PETITIONER

v.

COMMIL USA, LLC

ON PETITION AND CONDITIONAL CROSS-PETITION FOR A WRIT OF CERTIORARI TO THE UNITED STATES COURT OF APPEALS FOR THE FEDERAL CIRCUIT

BRIEF FOR THE UNITED STATES AS AMICUS CURIAE

INTEREST OF THE UNITED STATES

This brief is filed in response to the Court's order inviting the Solicitor General to express the views of the United States. In the view of the United States, the petition for a writ of certiorari in No. 13-896 should be granted, limited to the first question presented, and the conditional cross-petition in No. 13-1044 should be denied.

STATEMENT

1. A patent holder may bring a civil action for infringement in order to enforce the exclusive rights

granted by the Patent Act. 35 U.S.C. 271(a), 281, 284. Section 271(a) of Title 35 of the United States Code provides in relevant part that "whoever without authority makes, uses, offers to sell, or sells any patented invention, within the United States * * * infringes the patent." 35 U.S.C. 271(a). Under Section 271(a), a "direct infringer's knowledge or intent is irrelevant" to liability. *Global-Tech Appliances, Inc.* v. *SEB S.A.*, 131 S. Ct. 2060, 2065 n.2 (2011).

Section 271(b) states that "[w]hoever actively induces infringement of a patent shall be liable as an infringer." 35 U.S.C. 271(b). This Court has held that Section 271(b) requires "at least some intent," including knowledge of, or willful blindness concerning, the patentee's exclusive rights. *Global-Tech*, 131 S. Ct. at 2065, 2068.

2. a. Commil USA, LLC (Commil), holds U.S. Patent No. 6,430,395 (filed Feb. 16, 2001) (the '395 patent), which claims a method of implementing wireless networks. Cisco Systems, Inc. (Cisco), manufactures and sells wireless networking equipment. Commil brought this action in federal district court, alleging that Cisco had manufactured network access points and controllers that employed the claimed method. Pet. App. 2a-5a.[1] Commil alleged that Cisco directly infringes the '395 patent when it uses its access points and controllers, and that Cisco indirectly infringes when it encourages its customers to do the same. Pet. 7.

b. A jury rejected Cisco's contention that the '395 patent is invalid, and it found Cisco liable for direct

---

[1] Unless otherwise noted, all references to "Pet.," "Pet. App.," and "Br. in Opp." are to the petition, petition appendix, and brief in opposition filed in No. 13-896.

infringement but not for inducing infringement. Pet. App. 40a-41a. The jury awarded damages of approximately $3.7 million. *Id.* at 41a.

Commil moved for a new trial on inducement liability and damages on the ground that Cisco's local counsel had made inappropriate religious references intended to prejudice the jury against Commil. Pet. App. 41a-43a. The district court held that the comments had "prejudiced the jury's findings regarding indirect infringement and damages," and it granted a retrial on those issues, while leaving intact the jury's verdict that the '395 patent was not invalid. *Id.* at 44a; see 13-1044 Pet. App. 3a-12a.

c. In a subsequent partial retrial, Cisco sought to introduce evidence that it had a good-faith belief that the '395 patent was invalid. Cisco contended that such evidence supported its argument that it lacked intent to induce infringement. The district court excluded the evidence without explanation. Pet. App. 46a.

The district court instructed the jury that it could find Cisco liable for induced infringement only if it concluded that Cisco (1) "actually intended to cause the acts that constitute direct infringement," and (2) was aware of the patent and "knew or should have known that its actions would induce actual infringement." Pet. App. 238a-239a. The jury found Cisco liable for inducing infringement and awarded damages of approximately $63.8 million. *Id.* at 48a.

3. A divided panel of the Federal Circuit affirmed in part, vacated in part, and remanded for a new trial on induced infringement and damages. Pet. App. 1a-39a.

a. The court of appeals unanimously held that the district court's jury instructions were erroneous and

warranted retrial. The court stated that, under *Global-Tech*, "[a] finding of inducement requires both knowledge of the existence of the patent and 'knowledge that the induced acts constitute patent infringement.'" Pet. App. 9a (quoting 131 S. Ct. at 2068). The court of appeals concluded that the district court's jury instructions, by stating that Cisco could be found liable if it "knew or should have known that its actions would induce actual infringement," had allowed "the jury to find the defendant liable based on mere negligence where knowledge is required." *Id.* at 7a-8a. The court held that the instruction was prejudicial and required a retrial. *Id.* at 9a-10a.

A majority of the panel next held that the district court had erred by excluding Cisco's evidence that it possessed a good-faith belief that the '395 patent was invalid. Pet. App. 10a-13a, 28a-29a. The court stated that "evidence of an accused inducer's good-faith belief of invalidity may negate the requisite intent for induced infringement," *id.* at 12a-13a, because "[i]t is axiomatic that one cannot infringe an invalid patent," *id.* at 11a. The court also relied on the Federal Circuit's prior holding that evidence of "a good-faith belief of non-infringement" is a defense to inducement liability. *Ibid.* The court found "no principled distinction between a good-faith belief of invalidity and a good-faith belief of non-infringement for the purpose of whether a defendant possessed the specific intent to induce infringement of a patent." *Ibid.* The majority also stated, however, that a belief in invalidity would not necessarily "preclud[e] a finding of induced infringement." *Id.* at 13a & n.1.

A different majority held that the district court's grant of a retrial limited to inducement liability and

damages did not violate the Seventh Amendment. Pet. App. 17a-20a, 22a. The court explained that, under *Gasoline Products Co.* v. *Champlin Refining Co.*, 283 U.S. 494 (1931), partial retrials are permitted if, but only if, "it clearly appears that the issue to be retried is so distinct and separable from the others that a trial of it alone may be had without injustice." Pet. App. 17a (quoting 283 U.S. at 500). The court concluded that the issues to be retried were "distinct and separate" from the already-decided issue of the patent's validity. *Id.* at 20a.

Finally, the panel affirmed the district court's construction of the patent claims and its findings regarding validity. Pet. App. 20a-21a. The court declined to address Cisco's contention that Commil had failed to prove that Cisco's customers committed the direct infringement necessary to support Cisco's liability for inducement, as well as Cisco's arguments concerning damages. *Id.* at 21a.

b. Judge Newman dissented from the court's holding that a good-faith belief in invalidity is a defense to inducement liability. Pet. App. 22a-27a. Judge O'Malley dissented from the court's holding that the partial retrial was consistent with the Seventh Amendment, as well as from the court's decision not to reach the question whether Cisco's customers had committed direct infringement. *Id.* at 28a-39a.

4. The court of appeals denied both parties' petitions for rehearing en banc. Pet. App. 50a-52a. Five judges would have granted rehearing en banc to consider the panel's recognition of the "good faith belief in invalidity" defense, and four of those judges also would have granted rehearing to consider the panel's

grant of a partial retrial. *Id.* at 53a-60a (Reyna, J., dissenting); *id.* at 61a-63a (Newman, J., dissenting).

DISCUSSION

This Court should grant Commil's petition for certiorari (No. 13-896) with respect to the first question presented. The court of appeals erred in holding that a person who knowingly induces another to engage in infringing conduct may avoid liability under Section 271(b) by demonstrating that it had a good-faith belief that the infringed patent was invalid. This Court's review is warranted to prevent defendants from avoiding inducement liability on a ground that is inconsistent with the text, structure, and purposes of the relevant Patent Act provisions. The Court should deny review with respect to the second question presented, as Commil challenges only the court of appeals' case-specific interpretation of the jury instructions given at the second trial in this case.

The Court should deny Cisco's conditional cross-petition (No. 13-1044). The court of appeals correctly recognized that partial retrials are governed by this Court's decision in *Gasoline Products Co.* v. *Champlin Refining Co.*, 283 U.S. 494 (1931), and it correctly held that the inducement issues to be retried are distinct and separable from the validity questions decided by the portion of the verdict left intact. Although the court misstated the *Gasoline Products* standard in portions of its decision, it did not purport to announce a new standard, and the error does not appear to have affected the outcome.

I. THE COURT SHOULD GRANT THE FIRST QUESTION PRESENTED IN NO. 13-896

A. This Court Should Review The Federal Circuit's Ruling That A Good-Faith Belief That A Patent Is Invalid May Negate The Scienter Required For Liability Under Section 271(b)

The court of appeals erred in holding that a defendant's good-faith belief that the patent in question is invalid is a defense to inducement liability under Section 271(b). That holding is inconsistent with the Patent Act's text and structure, and it may undermine Section 271(b)'s efficacy as a means of deterring and remedying infringement. This Court's review is warranted.

1. a. Section 271(a) defines direct infringement by providing that "whoever without authority makes, uses, offers to sell, or sells any patented invention * * * infringes the patent." 35 U.S.C. 271(a). Because "unauthorized use, without more, constitutes infringement," *Aro Mfg. Co.* v. *Convertible Top Replacement Co.*, 377 U.S. 476, 484 (1964) (*Aro II*), a "direct infringer's knowledge or intent is irrelevant" to his liability under Section 271(a). *Global-Tech Appliances, Inc.* v. *SEB S.A.*, 131 S. Ct. 2060, 2065 n.2 (2011). Section 271(b) states that "[w]hoever actively induces infringement of a patent shall be liable as an infringer." 35 U.S.C. 271(b).

The Patent Act also identifies the defenses available to an accused infringer. See 35 U.S.C. 282. One such defense is non-infringement. 35 U.S.C. 282(b)(1). Another is that the asserted patent is invalid—*i.e.*, that the United States Patent and Trademark Office (PTO) erred in determining that the claimed invention

satisfies the requirements of the Patent Act. 35 U.S.C. 282(b)(2) and (3).

b. In *Aro II*, the Court construed 35 U.S.C. 271(c), which imposes secondary liability on any person who sells a component of a patented invention, "knowing the same to be especially made or especially adapted for use in an infringement of such patent." See 377 U.S. at 485. The Court stated that Section 271(c) "require[s] a showing that the alleged contributory infringer knew that the combination for which his component was especially designed was both patented and infringing." *Id.* at 488. The Court concluded that its "interpretation of the knowledge requirement affords Aro no defense with respect to replacement-fabric sales made after January 2, 1954." *Id.* at 490. The crucial event that occurred on January 2, 1954, was that the patent holder (AB) sent Aro a letter informing Aro of the relevant patent and of AB's view that Aro's conduct was infringing. *Id.* at 489-490. The Court appeared to treat that communication as conclusively establishing Aro's scienter for purposes of Section 271(c). See *id.* at 490-491.

The Court in *Aro II* did not discuss whether Aro continued to believe, even after receiving AB's letter, that the conduct it facilitated was actually non-infringing. Thus, although the Court referred to the defendant's knowledge that the conduct it facilitated "constituted infringement," 377 U.S. at 488, the Court found that knowledge to be established by the defendant's receipt of an allegation of infringement. The Court in *Aro II* focused not on whether the defendant *believed* that the conduct it facilitated was actually infringing, but on whether the defendant had been

given adequate warning of the risk of secondary liability.

c. In *Global-Tech*, the Court addressed the intent required for inducement liability under Section 271(b). The Court explained that Section 271(b)'s reference to "actively induc[ing]" infringement indicates that the defendant must "tak[e] * * * affirmative steps to bring about the desired result," and that the provision therefore requires "at least some intent." 131 S. Ct. at 2065. The Court held that Section 271(b) "requires knowledge of the existence of the patent that is infringed," and that willful blindness as to the existence of the patent could satisfy that requirement. *Id.* at 2068-2070. That holding was based on the Court's conclusion that *Aro II*'s construction of Section 271(c) was binding as a matter of *stare decisis*, and that there was no sound reason to give Section 271(b) a different reading. See *id.* at 2067-2068.

Global-Tech clearly establishes that a defendant may be held liable under Section 271(b) only if it knew about the patent at issue. *Global-Tech* does not clearly resolve, however, whether the defendant must additionally possess actual knowledge that the induced conduct constitutes infringement. On the one hand, certain passages in *Global-Tech* suggest that Section 271(b) requires only knowledge of (or willful blindness to) the patent's *existence*. See, *e.g.*, 131 S. Ct. at 2068 ("[W]e proceed on the premise that [Section] 271(c) requires knowledge of the existence of the patent that is infringed. Based on this premise, it follows that the same knowledge is needed for induced infringement under [Section] 271(b)."). On the other hand, prominent passages in *Global-Tech* suggest that Section 271(b) additionally requires proof that the defendant

knew the induced conduct to be infringing. See, *e.g.*, 131 S. Ct. at 2068 ("[W]e now hold that induced infringement under [Section] 271(b) requires knowledge that the induced acts constitute patent infringement."). The factual circumstances of *Global-Tech* did not require the Court to choose between those two potential understandings of Section 271(b)'s scienter requirement. See generally Gov't Br. at 19-20, *Spansion, Inc.* v. *International Trade Comm'n*, 132 S. Ct. 758 (2011) (No. 11-127).

2. Since *Global-Tech*, the Federal Circuit has held that Section 271(b) requires "specific intent" to cause infringement, including knowledge that the induced conduct actually infringes the patent. *DSU Med. Corp.* v. *JMS Co., Ltd.*, 471 F.3d 1293, 1305-1306 (2006) (en banc); *In re Bill of Lading Transmission & Processing Sys. Patent Litig.*, 681 F.3d 1323, 1339 (2012). Starting from that premise, the Federal Circuit held in this case that a good-faith belief in the invalidity of the patent in suit should similarly be a defense to inducement liability. Pet. App. 11a. That holding is inconsistent with the text, structure, and purposes of the relevant Patent Act provisions.

a. By providing that "[w]hoever actively induces *infringement* of a patent shall be liable as an infringer," Section 271(b) defines inducement liability in terms of direct infringement. See *Limelight Networks, Inc.* v. *Akamai Techs., Inc.*, 134 S. Ct. 2111, 2117 (2014). To establish inducement, the patentee must prove, *inter alia*, that the induced conduct constitutes direct infringement under Section 271(a). To satisfy that prerequisite to inducement liability, the patentee must demonstrate only that the induced parties practiced all the elements of a claimed product

or method without authorization. *Global-Tech*, 131 S. Ct. at 2065 n.2. The validity of the patent is not an element of direct infringement. 35 U.S.C. 271(a). A defendant's belief that the patent is invalid is likewise irrelevant to direct infringement, since Section 271(a) is a strict-liability tort. *Global-Tech*, 131 S. Ct. at 2065 n.2.

In addition to requiring proof that the induced conduct constituted direct infringement, Section 271(b) imposes an intent requirement. The plaintiff in a Section 271(b) case must prove that the alleged inducer intended, and took "affirmative steps to bring about," the conduct that is ultimately found to be infringing. *Global-Tech*, 131 S. Ct. at 2065. The plaintiff must also prove that the defendant was aware of (or was willfully blind to) the patent's existence. *Id.* at 2065-2068.

As explained above, *Global-Tech* does not resolve whether the defendant must know in addition that the induced conduct actually infringed the patent. But regardless of how that question is ultimately decided, Section 271(b) neither requires knowledge of the patent's validity nor suggests that a good-faith belief in invalidity is a proper defense. The inducee's unauthorized performance of all steps of a patented method constitutes "infringement," even if the patent is ultimately found to be invalid. Thus, even if Section 271(b) is held to require proof that the defendant knew the induced conduct would constitute actual "infringement," the defendant's good-faith belief in the invalidity of the patent would not suggest that such knowledge was lacking.[2]

---

[2] The Federal Circuit asserted that, although a good-faith belief in invalidity will *sometimes* preclude liability, it will not *necessari-*

b. The Federal Circuit offered two justifications for recognizing a "good-faith belief in invalidity" defense under Section 271(b). Pet. App. 10a-13a. Each is flawed.

i. In concluding that a good-faith belief in invalidity would negate a defendant's intent to induce infringement, the Federal Circuit asserted that "[i]t is axiomatic that one cannot infringe an invalid patent."[3] Pet. App. 11a. In fact, "infringement and invalidity are separate issues under the patent code." *Id.* at 56a (Reyna, J., dissenting from denial of rehearing en banc). A patent is infringed, regardless of its validity, if the defendant has practiced all of its elements without authorization. 35 U.S.C. 271(a); *Global-Tech*, 131 S. Ct. at 2065 n.2.

Thus, a "more accurate statement" of the law is that a finding of invalidity does not negate the fact of infringement, but instead precludes *liability* for that infringement. Pet. App. 57a (Reyna, J., dissenting from denial of rehearing en banc). Consistent with

---

ly have that effect. Pet. App. 13a & n.1. But if a good-faith belief in invalidity establishes that the defendant "can hardly be said" to have intended to induce infringement, *id.* at 12a, it is unclear how there could ever be circumstances in which the defendant believed the patent was invalid but still intended to induce infringement. The court also did not explain how the jury should decide whether such a defendant possesses the scienter necessary for inducement liability.

[3] Although the Federal Circuit has sometimes recited this "axiom," it has generally done so only to explain that it is unnecessary to resolve allegations of infringement when the patent has been held invalid. The two decisions cited by the court in this case fall into that category. See Pet. App. 11a (citing *Prima Tek II, L.L.C.* v. *Polypap, S.A.R.L.*, 412 F.3d 1284, 1291 (Fed. Cir. 2005); *Richdel, Inc.* v. *Sunspool Corp.*, 714 F.2d 1573, 1580 (Fed. Cir. 1983)).

that understanding, the Patent Act identifies "[n]on-infringement" and "[i]nvalidity of the patent" as *separate* defenses to an infringement suit. 35 U.S.C. 282(b)(1) and (2); cf. *Microsoft Corp.* v. *i4i Ltd. P'ship*, 131 S. Ct. 2238, 2246 (2011) (invalidity of patent must be proved by clear and convincing evidence). Indeed, Judge Giles Rich—one of the principal architects of the Patent Act of 1952—described the assertion "that invalid claims cannot be infringed" as "a nonsense statement." *Spectra-Physics, Inc.* v. *Coherent, Inc.*, 827 F.2d 1524, 1535 (Fed. Cir.), cert. denied, 484 U.S. 954 (1987); see also *Medtronic, Inc.* v. *Cardiac Pacemakers, Inc.*, 721 F.2d 1563, 1583 (Fed. Cir. 1983).

ii. Citing circuit precedent holding that a good-faith belief in non-infringement can be a defense to inducement liability, the Federal Circuit found "no principled distinction between a good-faith belief of invalidity and a good-faith belief of non-infringement." Pet. App. 11a (citing *DSU Med. Corp.*, 471 F.3d at 1307). As discussed above, see pp. 8-10, *supra*, this Court has not clearly endorsed the premise of the Federal Circuit's reasoning, *i.e.*, that a good-faith belief in non-infringement is a defense under Section 271(b). But because neither party contests that aspect of the court of appeals' reasoning, see Pet. 14, 24; Br. in Opp. 10, the soundness of that premise is not squarely at issue here.

Even if that premise is accepted, however, it does not follow that a belief in invalidity should also be a defense. If Section 271(b) requires knowledge that the induced conduct actually infringes a patent, then the accused infringer's good-faith belief that it was inducing activities outside the patent's coverage would negate that required knowledge. See Pet. App. 59a

(Reyna, J., dissenting from denial of rehearing en banc). By contrast, an inducer who knows that the induced conduct practices a patent, but who believes that the patent is invalid, nevertheless knows that it is inducing "infringement" as that term is properly understood. See *ibid.*; pp. 10-13, *supra*.

3. a. Whether a defendant's subjective belief as to validity can negate the scienter required for inducement liability is an issue of substantial ongoing importance. The decision below announces a defense to liability under Section 271(b) that had never previously been recognized by the Federal Circuit. Pet. App. 11a. The court's reasoning has broad implications, moreover, as it suggests that a defendant's good-faith belief in any potential defense to infringement liability —for instance, a good-faith belief that the patentee committed fraud on the PTO, see 35 U.S.C. 282(b)(1)— ought to be a defense to inducement.

The court of appeals' holding may "fundamentally change[] the operating landscape" of inducement suits. Pet. App. 60a (Reyna, J., dissenting from denial of rehearing en banc). Accused inducers are likely to raise the new defense in most, if not all, cases. Indeed, patent practitioners are already advising their clients that, when they are notified by a patent holder that they may be inducing infringement, they should quickly obtain an "opinion of counsel" to support a claim of a good-faith belief in invalidity, because such an opinion "can be particularly helpful" in "avoid[ing] inducement liability." *E.g.*, Brian D. Coggio, *Avoid Inducement Liability With Early Opinion Of Counsel* (Mar. 21, 2014), http://www.law360.com/articles/516267/avoid-inducement-liability-with-early-opinion-of-counsel.

Inducement liability provides an important means of enforcing patent rights. Although the Federal Circuit's "knowledge of invalidity" requirement would not limit the patent holder's rights against direct infringers under Section 271(a), Section 271(b) reflects Congress's understanding that it is often impractical or impossible to enforce those rights against all direct infringers. Cf. *Aro II*, 377 U.S. at 511 (plurality opinion) (explaining that the purpose of Section 271(c) "is essentially, as was stated in the earlier versions of the bill that became [Section] 271(c), 'to provide for the protection of patent rights where enforcement against direct infringers is impracticable'") (quoting H.R. 5988, 80th Cong., 2d Sess. 1 (1948); H.R. 3866, 81st Cong., 1st Sess. 1 (1949)); *ibid.* (noting testimony of Giles Rich that "[t]here may be twenty or thirty percent of all the patents that are granted that cannot practically be enforced against direct infringers"); *Metro-Goldwyn-Mayer Studios Inc.* v. *Grokster, Ltd.*, 545 U.S. 913, 929-930 (2005) (explaining that principles of secondary liability serve an analogous purpose in copyright cases). The decision below may substantially undermine that function by engrafting onto Section 271(b) an additional scienter requirement that is difficult to satisfy and is not justified by the Patent Act's text and structure.

b. This case is an appropriate vehicle for considering whether a good-faith belief in invalidity is a defense to inducement liability. The legal issue is cleanly presented, and there appear to be no obstacles preventing this Court from reaching it.

To be sure, the Federal Circuit's "belief in invalidity" holding is only one of two grounds on which the court concluded that Cisco is entitled to a new trial on

inducement. The other ground is that the jury instructions on inducement were incorrect, and Commil has challenged that holding in its second question presented. For the reasons discussed below, further review of that issue is not warranted. Even if that holding remains intact, however, and a new trial is therefore necessary, the parties have a substantial interest in correct resolution of the first question presented, since reversal of the Federal's Circuit's holding on that question would prevent Cisco from raising a "good-faith belief in invalidity" defense on retrial.[4]

B. Commil's Challenge To The Federal Circuit's Interpretation Of The Jury Instructions Does Not Warrant This Court's Review

Petitioner also challenges (Pet. 20-30) the court of appeals' holding that the jury instructions given by the district court in the partial retrial were inconsistent with *Global-Tech*. That issue does not warrant this Court's review.

1. a. The second trial in this case took place before the Court's decision in *Global-Tech*. At that trial, the district court instructed the jury that it could hold Cisco liable for inducement only if it found that Cisco "actually intended to cause the acts that constitute direct infringement and that Cisco knew or should

---

[4] If another retrial occurs, Cisco will have additional available arguments, including that Commil "failed to prove the direct infringement predicate for its induced infringement claim." Pet. App. 32a. Although Cisco pressed that argument before the Federal Circuit, the court did not resolve it. The likelihood that Cisco will assert additional, independent defenses on remand does not render the question presented here less worthy of this Court's review.

have known that its actions would induce actual infringement." Pet. App. 238a-239a. The instructions also stated that Cisco could not be liable if it "was not aware of the existence of the patent." *Id.* at 239a. The Federal Circuit held that, insofar as that instruction permitted Cisco to be held liable if it "should have known" that the induced acts were infringing, that instruction was inconsistent with *Global-Tech*, which the court of appeals construed as holding that "induced infringement 'requires knowledge that the induced acts constitute patent infringement.'" *Id.* at 7a (quoting 131 S. Ct. at 2068).

In its Federal Circuit brief, Commil conceded that *Global-Tech* held that Section 271(b) requires "knowledge that the induced acts constitute patent infringement," but argued that the instructions as a whole were consistent with that standard. Commil C.A. Br. 42. In Commil's view, the instructions simply permitted the jury to find that Cisco knew of the infringing nature of the acts based on "circumstantial evidence," including evidence that Cisco should have known that the acts were infringing. *Id.* at 40. The court of appeals rejected Commil's characterization of the jury instructions. The court concluded that, rather than "merely allow[ing] the jury to find knowledge based upon circumstantial evidence," the instructions as a whole "plainly * * * allow[ed] the jury to find [Cisco] liable based on mere negligence where knowledge is required." Pet. App. 8a.

b. In this Court, Commil does not challenge the Federal Circuit's understanding of the legal rule announced in *Global-Tech*. Rather, Commil agrees with the Federal Circuit that, under *Global-Tech*, "induced infringement * * * requires knowledge that the in-

duced acts constitute patent infringement." Pet. 24 (quoting 131 S. Ct. 2067-2068). Commil thus renews its argument that the jury instructions as a whole were consistent with that understanding of *Global-Tech* because they permitted the jury to infer from circumstantial evidence that Cisco knew the induced conduct was infringing. Pet. 30; see Pet. 23 n.3 (arguing that evidence that Cisco "should have known that its actions would induce actual infringement" gave rise to an inference that Cisco actually "knew of the infringement").

Commil thus raises a case-specific challenge to the court of appeals' interpretation of the particular instructions given in this case. The court's assessment of the ultimate import of the jury instructions is unlikely to have implications beyond this case, and it does not warrant this Court's review.

2. a. Although Commil does not challenge the court of appeals' decision on this basis, the question whether the jury instruction was appropriate implicates the question whether Section 271(b) requires knowledge that the induced conduct actually constituted infringement. If Section 271(b) simply requires knowledge of the patent's existence, alone or in combination with knowledge that the patentee views the induced conduct as infringing, then the Federal Circuit's analysis of the instructions was based on an erroneous premise.

Plausible arguments can be made in support of either interpretation. Construing Section 271(b) to require knowledge of actual infringement would reflect a more straightforward reading of the statutory text. Section 271(b) provides that the inducer must "actively induce[] infringement." 35 U.S.C. 271(b).

Given *Global-Tech*'s holding that Section 271(b) requires *some* form of scienter, beyond the intent to induce the acts that are ultimately found to be infringing, it would be natural to construe the reference to "infringement" to require knowledge that the induced conduct actually practices the patent.

On the other hand, in concluding that Section 271(b) requires (at least) knowledge of the patent, the *Global-Tech* Court did not undertake an independent assessment of Section 271(b)'s text, history, and purposes. Instead, the Court held that *Aro II*'s construction of Section 271(c), which defines contributory infringement, "resolved the question" of the mens rea required by Section 271(b). *Global-Tech*, 131 S. Ct. at 2067. The Court in *Aro II* found Section 271(c)'s scienter requirement to be satisfied by evidence that the defendant had knowledge of the patent in question, as well as knowledge that the *patentee* believed the underlying activities to be infringing. 377 U.S. at 488-490; see pp. 8-9, *supra*. Since (as the Court subsequently held in *Global-Tech*) Section 271(b) and (c) impose equivalent scienter requirements, *Aro II* implies that, at least so long as the defendant is aware of the patent and of plausible allegations that the induced conduct is infringing, he can be held liable under Section 271(b) even if he believes in good faith that the induced conduct does not practice the patent.

Considerations of patent policy support that construction of Section 271(b). If Section 271(b) requires only knowledge of the patent, combined perhaps with knowledge that the patentee views the induced acts as infringing, a patentee can provide the potential inducer with that knowledge. Once the inducer knows about the patent and the patentee's view of its scope,

he can order his conduct accordingly, *e.g.*, by modifying his product, maintaining his present course, or (if an actual controversy exists) seeking a judicial ruling to clarify his rights, see *MedImmune, Inc.* v. *Genentech, Inc.*, 549 U.S. 118, 127-128 (2007). If he continues to engage in conduct that may induce infringement, he may reasonably be expected to bear the risk of an inducement suit.

By contrast, if Section 271(b) also requires proof that the alleged inducer subjectively believed that the induced conduct was infringing, the patentee will never be able to confer the requisite knowledge on the inducer. Even when the induced conduct is ultimately found to be infringing, inducers will often be able to identify plausible, good-faith bases for questioning that conclusion, and it will be difficult for the patentee to prove that the defendant's belief was not genuine. See, *e.g.*, *Bettcher Indus., Inc.* v. *Bunzl USA, Inc.*, 661 F.3d 629, 648-649 (Fed. Cir. 2011) (attorney's oral opinion that plaintiff would not prevail in an infringement suit was admissible evidence of defendant's good-faith belief in non-infringement). Like the "good-faith belief in invalidity" defense that is directly at issue in this case, a "good-faith belief in non-infringement" defense would render Section 271(b) substantially less effective in preventing and redressing violations of the patent holder's exclusive rights. Cf. pp. 14-15, *supra*.

b. The question whether Section 271(b) requires knowledge that the induced conduct is actually infringing is an important one that would warrant this Court's review in an appropriate case. Here, however, Commil has not defended the jury instructions on the ground that knowledge of actual infringement is un-

necessary, but instead agrees with Cisco and the court of appeals that Section 271(b) requires such knowledge. Pet. 24; accord Br. in Opp. 14; Pet. App. 9a. Because the argument that Section 271(b) does not require knowledge of actual infringement was not "presented to or passed on by the lower courts," and is not being "urged by either party in this Court," *Bell* v. *Wolfish*, 441 U.S. 520, 531 n.13 (1979), this case is not a suitable vehicle to consider the question.

II. THE PETITION IN NO. 13-1044 SHOULD BE DENIED

Cisco contends (13-1044 Pet. 8-9) that, if this Court grants review to consider the Federal Circuit's inducement holding, the Court should also consider whether the "partial retrial ordered by the district court and the second partial retrial resulting from the Federal Circuit's remand" (13-1044 Pet. 16) are consistent with the Seventh Amendment. That question does not warrant the Court's review.

The court of appeals correctly recognized that the Seventh Amendment prohibits a partial retrial "unless it clearly appears that the issue to be retried is so distinct and separable from the others that a trial of it alone may be had without injustice." Pet. App. 17a (quoting *Gasoline Prods. Co.* v. *Champlin Ref. Co.*, 283 U.S. 494, 500 (1931)); see Fed. R. Civ. P. 59(a)(1)(A). The court further recognized that a partial retrial is inappropriate if the issues to be retried are "so interwoven" with other issues in the case that retrial of the former alone will cause "confusion and uncertainty." Pet. App. 18a (quoting *Gasoline Prods.*, 283 U.S. at 500).

The court of appeals also correctly concluded that, as a general matter, the question whether the defendant has induced infringement is "distinct and separa-

ble" from the question whether the patent is invalid. Pet. App. 18a. In a partial retrial, the jury would be able to determine whether Cisco has induced infringement without re-deciding any of the issues that the first jury resolved in assessing the validity of the patent. Even if this Court affirms the Federal Circuit's ruling and Cisco is permitted to assert that it had a good-faith belief in invalidity, the jury would be able to consider evidence relating to that issue without revisiting the first jury's conclusions as to the patent's actual validity. *Id.* at 20a; cf. *Gasoline Prods.*, 283 U.S. at 500-501 (concluding that issue of damages for breach of contract was not separable from issue of breach itself, where jury considering damages might have to re-ascertain some of the facts underlying first jury's breach verdict). And if this Court holds (as we argue above) that Cisco's purported good-faith belief in invalidity is *not* relevant in determining liability under Section 271(b), Cisco's *Gasoline Products* argument will be substantially undercut. See 13-1044 Pet. 16-19 (arguing that question of good-faith belief in invalidity is closely intertwined with question of actual validity).

As Cisco observes (13-1044 Pet. 10), the court below at times articulated the Seventh Amendment standard in a way that deviates from the formulation used in *Gasoline Products*. The court concluded its opinion by stating that a partial retrial would not "constitute a clear and indisputable infringement of the constitutional right to a fair trial." Pet. App. 20a. That formulation, which the court appears to have inadvertently borrowed from the mandamus context, see *id.* at 18a (citing a mandamus case, *Bankers Life & Cas. Co.* v. *Holland*, 346 U.S. 379, 384 (1953)), would

seem to permit a partial retrial more readily than the *Gasoline Products* standard.

Nevertheless, this Court's review is not warranted. The Federal Circuit correctly identified *Gasoline Products* as providing the appropriate legal standard, and it correctly stated that standard at the outset of its analysis. Pet. App. 17a-18a. There is no indication that the court, in referring to the mandamus standard, intended to establish a new standard for reviewing the grant of a partial retrial. Nor does it appear that the court's erroneous statement affected the outcome, as the court correctly concluded that the issues of inducement and invalidity are not intertwined. The decision therefore does not squarely conflict with other circuit-court decisions that have simply restated the *Gasoline Products* standard without modification. But cf. 13-1044 Pet. 21.

Finally, the underlying equities counsel against using this case as a vehicle for revisiting the circumstances in which a partial retrial is appropriate. The court of appeals found "ample evidence" to conclude that Cisco's local counsel had engaged in misconduct involving prejudicial and "irrelevant references to ethnicity and religion." Pet. App. 17a. Cisco does not challenge that conclusion, and it does not deny that a retrial is appropriate. Rather, Cisco seeks to expand the scope of the retrial in order to relitigate the validity issue on which Commil previously prevailed. That would effectively reward Cisco for its counsel's misconduct by affording Cisco a second chance to convince a jury that the patent is invalid.

CONCLUSION

The petition for a writ of certiorari in No. 13-896 should be granted, limited to the first question presented. The conditional cross-petition for a writ of certiorari in No. 13-1044 should be denied.

Respectfully submitted.

DONALD B. VERRILLI, JR.
Solicitor General
JOYCE R. BRANDA
Acting Assistant Attorney General
MALCOLM L. STEWART
Deputy Solicitor General
GINGER D. ANDERS
Assistant to the Solicitor General
MARK R. FREEMAN
THOMAS PULHAM
Attorneys

SARAH T. HARRIS
General Counsel
NATHAN K. KELLEY
Solicitor
THOMAS W. KRAUSE
Deputy Solicitor
FRANCES M. LYNCH
BRIAN T. RACILLA
Associate Solicitors
United States Patent and Trademark Office

OCTOBER 2014

JOINT APPENDIX

RECORD AND BRIEFS

No. 13-896

Supreme Court, U.S.
FILED
JAN 20 2015
OFFICE OF THE CLERK

In The
Supreme Court of the United States

COMMIL USA, LLC,

Petitioner,

v.

CISCO SYSTEMS, INC.,

Respondent.

ON WRIT OF CERTIORARI TO THE UNITED STATES COURT OF APPEALS FOR THE FEDERAL CIRCUIT

JOINT APPENDIX

MARK S. WERBNER
Counsel of Record
RICHARD A. SAYLES
MARK D. STRACHAN
DARREN P. NICHOLSON
SAYLES | WERBNER P.C.
4400 Renaissance Tower
1201 Elm Street
Dallas, TX 75270
(214) 939-8700
mwerbner@swtriallaw.com

Counsel for Petitioner
Commil USA, LLC

WILLIAM F. LEE
Counsel of Record
MARK C. FLEMING
FELICIA H. ELLSWORTH
ERIC F. FLETCHER
WILMER CUTLER PICKERING
HALE AND DORR LLP
60 State Street
Boston, MA 02109
(617) 526-6000
william.lee@wilmerhale.com

Counsel for Respondent
Cisco Systems, Inc.

(Counsel Continued Inside Cover)

PETITION FOR CERTIORARI FILED JANUARY 23, 2014
CERTIORARI GRANTED DECEMBER 5, 2014

THE LEX GROUP DC • 1825 K Street, N.W. • Suite 103 • Washington, D.C. 20006
(202) 955-0001 • (800) 856-4419 • Fax (202) 955-0022 • www.thelexgroup.com

Library of Congress
Law Library

Leslie V. Payne
Nathan J. Davis
Miranda Y. Jones
HEIM, PAYNE & CHORUSH, LLP
JP Morgan Chase Tower
600 Travis, Suite 6710
Houston, TX 77002
(713) 221-2000

Counsel for Petitioner Commil USA, LLC

Seth P. Waxman
Francesco Valentini
WILMER CUTLER PICKERING HALE AND DORR LLP
1875 Pennsylvania Avenue, NW
Washington, DC 20006
(202) 663-6000

Counsel for Respondent Cisco Systems, Inc.

Jeffrey E. Ostrow
Harrison J. Frahn IV
Patrick E. King
Jonathan Sanders
SIMPSON THACHER & BARTLETT LLP
2550 Hanover Street
Palo Alto, CA 94304
(650) 251-5000

Counsel for Respondent Cisco Systems, Inc.

Henry B. Gutman
SIMPSON THACHER & BARTLETT LLP
425 Lexington Avenue
New York, NY 10017
(212) 455-2000

Counsel for Respondent Cisco Systems, Inc.

APPENDIX TABLE OF CONTENTS

Page

Docket Sheet for Commil USA, LLC v. Cisco Systems, Inc., United States District Court for the Eastern District of Texas, Case No. 07-CV-0341 ..... 1a

Docket Sheet for Commil USA, LLC v. Cisco Systems, Inc., United States Court of Appeals for the Federal Circuit, Case No. 2012-1042 ..... 8a

Jury Instructions in Jury Trial before The Honorable Chad Everingham on April 8, 2011 ..... 11a

Verdict Form entered April 8, 2011 ..... 34a

Plaintiff's Fourth Amended Complaint entered October 8, 2009 ..... 36a

Excerpts of Trial Transcript before The Honorable Chad Everingham Morning Session on May 12, 2010 ..... 43a

Excerpts of Trial Transcript before The Honorable Chad Everingham Morning Session on May 14, 2010 ..... 54a

Excerpts of Trial Transcript before
The Honorable Chad Everingham
Afternoon Session
on April 5, 2011 ..... 60a

Excerpts of Trial Transcript before
The Honorable Chad Everingham
Afternoon Session
on April 6, 2011 ..... 81a

Excerpts of Trial Transcript before
The Honorable Chad Everingham
Afternoon Session
on April 8, 2011 ..... 96a

PTX 273 – Changing the Game for WLANs: Airespace's Breakthrough "Split MAC" Architecture 102a

PTX 276A – Split 802.11 MAC Processing 116a

PTX 332 – Patent Application 09/982,591 ..... 129a

PTX 333 – U.S. Patent No. 6,975,877 ..... 135a

PTX 341 – Understanding the Lightweight Access Point Protocol (LWAPP) 152a

Reexamination Certificate 159a

Excerpts of Trial Transcript before
The Honorable Chad Everingham
Morning Session
on April 7, 2011 ..... 167a

U.S. DISTRICT COURT
EASTERN DISTRICT OF TEXAS (MARSHALL)
CIVIL DOCKET FOR
CASE #: 2:07-CV-00341-JRG

Commil USA, LLC v. Cisco Systems, Inc.

Assigned to: Judge Rodney Gilstrap

Date Filed	#	Docket Text
08/08/2007	1	COMPLAINT *For Patent Infringement and Jury Demand* against Cisco Systems, Inc. * * * filed by Commil USA, LLC
10/09/2007	16	AMENDED COMPLAINT for Patent Infringement * * * filed by Commil USA, LLC.
11/30/2007	42	ANSWER to Amended Complaint, COUNTERCLAIM against Commil USA, LLC by Cisco Systems, Inc..
12/20/2007	56	Commil USA, LLC's ANSWER to Counterclaim of Defendant Cisco Systems, Inc. by Commil USA, LLC.
08/08/2008	88	STIPULATED PROTECTIVE ORDER. Signed by Magistrate Judge Charles Everingham on 8/8/08.
10/08/2009	186	AMENDED COMPLAINT Plaintiff's Fourth Amended Complaint and Jury Demand

		against Cisco Systems, Inc., Aruba Networks, Inc., filed by Commil USA, LLC.
11/09/2009	195	ANSWER to 186 Amended Complaint, COUNTERCLAIM against Commil USA, LLC by Cisco Systems, Inc..
05/17/2010	335	JURY VERDICT.
05/21/2010	345	NOTICE OF FILING OF OFFICIAL TRANSCRIPT of Proceedings held on 5/12/10 Morning Session before Judge Chad Everingham.
05/21/2010	349	NOTICE OF FILING OF OFFICIAL TRANSCRIPT of Proceedings held on 5/14/10 Morning Session before Judge Chad Everingham.
12/29/2010	361	ORDER granting 353 Motion for New Trial Jury Trial * * * signed by Magistrate Judge Charles Everingham on December 29, 2010.
02/23/2011	373	MEMORANDUM OPINION and ORDER- denying # 362 motion for reconsideration or in the alternative, clarification of the court's order granting a new trial and document # 368 certification of the new trial order for interlocutory appeal. Signed by

		Magistrate Judge Charles Everingham on 2/23/11.
03/11/2011	383	SEALED MOTION IN LIMINE by Commil USA, LLC.
03/18/2011	389	SEALED PATENT RESPONSE to SEALED PATENT MOTION re 383 SEALED MOTION IN LIMINE filed by Cisco Systems, Inc..
03/18/2011	391	TRIAL BRIEF by Commil USA, LLC.
03/18/2011	392	Proposed Pretrial Order by Commil USA, LLC.
03/30/2011	395	SUR-REPLY to Reply to Response to Motion re 383 SEALED MOTION IN LIMINE Supplemental Brief in Further Support of its Opposition to Plaintiffs Motion in Limine No. 6 filed by Cisco Systems, Inc..
03/31/2011	396	NOTICE OF FILING OF OFFICIAL TRANSCRIPT of PRETRIAL HEARING held on 3/24/11 before Judge Chad Everingham.
04/01/2011	398	TRIAL BRIEF Plaintiff's Brief Concerning Cisco's Alleged "Good Faith Invalidity Defense" by Commil USA, LLC.

04/01/2011	399	ORDER granting in part and denying in part 383 Sealed Motion; granting in part and denying in part 384 Sealed Patent Motion; granting 385 Motion for Leave to File Excess Pages. Signed by Magistrate Judge Charles Everingham on 4/1/11.
04/07/2011	412	MOTION for Judgment as a Matter of Law of No Induc[illegible]ent by Cisco Systems, Inc..
04/08/2011	416	MOTION for Judgment as a Matter of Law on Induced Infringement by Commil USA, LLC.
04/08/2011	419	NOTICE by Cisco Systems, Inc. -- Notice of Objections to Proposed Jury Instructions Referenced During Oral Argument.
04/08/2011	420	MOTION for Judgment as a Matter of Law on Inducement by Cisco Systems, Inc..
04/08/2011	422	JURY VERDICT.
04/07/2011	429	Sealed Court Exhibit One.
04/25/2011	432	RESPONSE in Opposition re 416 MOTION for Judgment as a Matter of Law on Induced Infringement filed by Cisco Systems, Inc..

05/04/2011	435	RESPONSE in Opposition re 420 MOTION for Judgment as a Matter of Law on Inducement filed by Commil USA, LLC.
05/16/2011	437	REPLY to Response to Motion re 420 MOTION for Judgment as a Matter of Law on Inducement filed by Cisco Systems, Inc..
05/20/2011	438	ORDER denying 412 Motion for Judgment as a Matter of Law; denying 413 Motion for Judgment as a Matter of Law; denying 416 Motion for Judgment as a Matter of Law; denying 420 Motion for Judgment as a Matter of Law; denying 421 Motion for Judgment as a Matter of Law. Signed by Magistrate Judge Charles Everingham on 5/20/11.
05/20/2011	439	JUDGMENT The court severs all claims for future damages and directs Commil to file a new complaint with the clerk of court within fourteen (14) days from the date of this judgment should Commil desire to seek an award of future royalties. All other motions are DENIED. Costs of court are taxed against Cisco. Signed by Magistrate Judge Charles Everingham on 5/20/11.

05/24/2011	440	Opposed MOTION to Amend/ Correct *Final Judgment* by Commil USA, LLC.
06/01/2011	451	NOTICE OF FILING OF OFFICIAL TRANSCRIPT of Proceedings held on 4/6/11 Afternoon Session before Judge Chad Everingham.
06/01/2011	455	NOTICE OF FILING OF OFFICIAL TRANSCRIPT of Proceedings held on 4/8/11 Afternoon Session before Judge Chad Everingham.
06/10/2011	465	RESPONSE in Opposition re 440 Opposed MOTION to Amend/Correct Final Judgment filed by Cisco Systems, Inc..
06/17/2011	467	MOTION for Judgment as a Matter of Law RENEWED of Invalidity by Cisco Systems, Inc..
06/17/2011	469	MOTION for New Trial by Cisco Systems, Inc..
07/05/2011	472	RESPONSE in Opposition re 467 MOTION for Judgment as a Matter of Law RENEWED- of Invalidity filed by Commil USA, LLC.
07/06/2011	475	RESPONSE in Opposition re 469 MOTION for New Trial

		CORRECTED RESPONSE filed by Commil USA, LLC.
07/18/2011	477	REPLY to Response to Motion re 467 MOTION for Judgment as a Matter of Law RENEWED of Invalidity filed by Cisco Systems, Inc..
07/18/2011	479	REPLY to Response to Motion re 469 MOTION for New Trial filed by Cisco Systems, Inc..
09/28/2011	480	AMENDED FINAL JUDGMENT as set forth herein. Signed by Magistrate Judge Charles Everingham on 9/28/11.
09/28/2011	481	MEMORANDUM OPINION and ORDER- order granting 440 motion to amend judgment; 461 amended Bill of Costs approved in part rejected in part; denying motions 466, 467, 468, 469. Signed by Magistrate Judge Charles Everingham on 9/28/11.
10/17/2011		NOTICE re 486 Notice of Appeal-PATENT CASE.
11/08/2013	500	ORDER from the USCA for the Federal Circuit Court that appeal case has issued as Mandate on 11/1/13 from Judgment entered on 6/25/13.

* * *

U.S. COURT OF APPEALS
FOR THE FEDERAL CIRCUIT
COMMIL USA, LLC V. CISCO SYSTEMS, INC.
2012-1042

* * *

Date	History
06/25/2013	Disposition: Affirm-in-Part, Vacate-in-Part, and Remand
11/01/2013	Mandated on

>>Entries for Case Number: 2012-1042<<

Entry 1:	Appeal docketed. Received: 10/28/2011
Entry 30:	02/15/2012 BRIEF FILED for Appellant Cisco Systems, Inc. [29]. Title: Brief for Defendant-Appellant, [Non-Confidential version only]. Number of Pages: 66.
Entry 34:	04/24/2012 BRIEF FILED for Appellee Commil USA, LLC [33]. Title: Brief for Plaintiff-Appellee, [Non-Confidential version only]. Number of Pages: 68.
Entry 40:	06/01/2012 BRIEF FILED for Appellant Cisco Systems, Inc. [39]. Title: Reply Brief for Defendant-Appellant, [Non-Confidential version only]. Number of Pages: 31.

Entry 48: 06/20/2012 APPENDIX FILED for Cisco Systems, Inc. [47], [46]. Title: Corrected Joint Appendix (2 vols.), [Confidential and Non-Confidential versions]. Number of Pages: 721.

Entry 59: 12/07/2012 Submitted after ORAL ARGUMENT by William F. Lee for Cisco Systems, Inc. and Mark S. Werbner, Esq. for Commil USA, LLC. Panel: Newman, Prost and O'Malley.

Entry 63: 06/25/2013 OPINION and JUDGMENT filed. The judgment or decision is: Affirm-in-Part, Vacate-in-Part, and Remand. (Precedential Opinion). (For the Court: Newman, Circuit Judge; Prost, Circuit Judge and O'Malley, Circuit Judge). Opinions concurring-in-part, dissenting-in-part filed by Circuit Judges Newman and O'Malley.

Entry 64: 06/25/2013 ERRATA to the Precedential Opinion Doc No.: [63]

Entry 65: 07/25/2013 Petition for en banc rehearing filed by Appellee Commil USA, LLC. Service: 07/25/2013 by email.

Entry 79: 8/12/2013 RESPONSE of Appellant Cisco Systems, Inc. to the petition for en banc rehearing [65] filed by Appellee Commil USA, LLC in 12-1042.

Entry 83: 10/25/2013 ORDER filed denying [65] petition for en banc rehearing filed by Commil USA, LLC. The mandate will issue on 11/01/2013. By: En Banc (Per Curiam).

Entry 85: 10/25/2013 CORRECTED ORDER: correcting court order [83].

Entry 86: 11/01/2013 Mandate issued to the United States District Court for the Eastern District of Texas.

* * *

IN THE UNITED STATES DISTRICT COURT
FOR THE EASTERN DISTRICT OF TEXAS
MARSHALL DIVISION

COMMIL USA	* Civil Docket No.
	* 2:07-CV-341
vs.	* Marshall, Texas
	*
	* April 8, 2011
CISCO SYSTEMS, INC., ET AL	* 12:45 P.M.

TRANSCRIPT OF JURY TRIAL
BEFORE THE HONORABLE
CHAD EVERINGHAM
UNITED STATES MAGISTRATE JUDGE

APPEARANCES:

FOR THE PLAINTIFFS:
MR. MARK S. WERBNER
MR. RICHARD A. SAYLES
MR. MARK D. STRACHAN
Sayles Werbner
1201 Elm Street
4400 Renaissance Tower
Dallas, TX 75270

FOR THE DEFENDANTS:
MR. HENRY B. GUTMAN
(CISCO) MR. JEFFREY E. OSTROW
MR. HARRISON J. FRAHN, IV
MR. JONATHAN SANDERS
Simpson Thacher & Bartlett
2550 Hanover St.
Palo Alto, CA 94304

COURT REPORTERS:

MS. SUSAN SIMMONS, CSR
MS. SHELLY HOLMES, CSR
Official Court Reporters
100 East Houston, Suite 125
Marshall, TX 75670
903/935-3868

(Proceedings recorded by mechanical stenography, transcript produced on CAT system.)

the real issues in the case are.

And then there were all those – then there were all those questions of Mr. Carlile, lawyer talk again. Mr. Carroll asked him a bunch of things. Mr. Carlile said: Well, I don't know. If you – I don't know. If you say so.

Mr. Carlile (sic) said: Well, we'll bring that to you tomorrow.

You never heard anybody deliver on that promise.

You know, after the five years that Commil USA has spent trying to fight for their rights, asking simply for a reasonable royalty, a reasonable royalty, I hope that you will do what we haven't been able to do.

Just hold them to their responsibility. Just ask them to respect the lawful rights that were granted that is owned by the Plaintiff. That's all Mr.

Sayles and I ask of you. Make them respect these rights and stop ignoring them.

Thank you.

THE COURT: All right. Ladies and Gentlemen of the Jury, you have heard the evidence presented by the parties to this suit and the argument of the respective attorneys in support of their

positions.

It is now my duty to give you the charge in this case. It will be an oral charge and is given in an effort to assist you in your deliberation in deciding the issues which you must decide in order to reach a fair and impartial verdict in this case.

Perhaps this function of the Court is the most important one that the Court performs in the trial of a case, so I ask you to pay close attention to my remarks.

You will remember that at the beginning of this trial, I gave you some general instructions and definitions. Rather than repeat them, I ask you to recall them now in deciding the facts and issues which you are to decide.

As I instructed you at the beginning of the trial, you are the exclusive judges of the facts, the

credibility of the evidence, and the weight to be given the testimony of the witnesses.

You are to perform your duty without bias or prejudice to any party. The law does not permit jurors to be governed by sympathy or prejudice.

A corporation and all other persons are equal before the law and must be treated as equals in a court of justice. The Court and the parties expect that

you will carefully and impartially consider all of the evidence, follow the law as I will give it to you, and reach a just verdict.

You are instructed that all persons, including the Plaintiff and the Defendant in this case, stand equal before the law, and are to be dealt with as equals in this Court. The law is no respecter of persons.

I will now review briefly the contentions of the parties and give you some additional instructions and definitions that will guide you in deciding the issues or facts that you must resolve in this case.

Now, I'm going to go over the Plaintiff's claims and the Defendant's defenses. The Plaintiff, Commil USA, LLC, or Commil, alleges that the Defendant, Cisco Systems, Incorporated, or Cisco, induces infringement of certain claims of United States

Patent No. 6,430,395. We've also referred to that as the '395 patent.

Specifically, Commil contends that Cisco induced infringement of Claims 1, 4, and 6 of the '395 patent by selling the following: Cisco's 500 Series Wireless Mobility Express Controller; 2000 Series WLAN Controller; 2100 Series WLAN Controller; 3750 Series WLAN Controller; 4400 Series WLAN Controller; 6500

Series and 7500 Series Wireless Services Module; Wireless LAN Controller Module; 500 Series Express Mobility LAPs; 1000 series LAPs; 1100 series LAPs, 1130 G Series LAPs; 1130 AG Series LAPs; 1200 Series LAPs; 1230 AG Series LAPs; 1240 AG Series LAPs; 1250 Series LAPs; 1300 Series LAPs; and 1500 Series LAPs.

Commil alleges that Cisco induces infringement of Claims 1, 4, and 6 of the '395 patent by encouraging others to use the accused products in an infringing manner. Commil seeks damages in the form of a reasonable royalty to compensate it for the alleged infringement.

Now, Cisco denies that it induces infringement of the asserted claims and further denies that the Plaintiff is entitled to the money damages it seeks.

Commil bears the burden of proof by a preponderance of the evidence that Cisco induces

infringement of the asserted claims of the '395 patent. Commil also has the burden of proving by a preponderance of the evidence the amount of damages caused by Cisco's alleged infringement.

I will now give you instructions and definitions to help you in answering the questions to follow:

94

First, with respect to claim interpretation, to decide the questions of induced infringement, you must first understand what the claims of the patent cover, that is, what they prevent anyone else from doing. This is called claim interpretation.

It is my duty under the law to interpret what the words used in the claims of the '395 patent mean. I have made my determination, and I will instruct you accordingly. You must apply the meaning I give the patent claims to your decisions on induced infringement.

I will now instruct you how those words are to be construed and understood when deciding the issue of induced infringement.

Now, you've been provided with a copy of these definitions previously, but I'm going to read them now.

The term mobile unit means a wireless communication device.

The term base station means transmitting/receiving station in a wireless local network that is fixed in location.

The term switch means an apparatus for routing telephone calls. You are instructed, however, that the invention is not limited to making telephone calls.

95

What the claims require is the performance by a person or entity of each of the steps in the method in a wireless communication system having at least two base stations in communication with at least one switch as these terms have been defined by the Court.

The term communication protocol means a set of procedures required to initiate and maintain communication between two or more devices.

The term a short-range communication protocol means a set of procedures required to initiate and maintain short-range communication between two or more devices.

The term accurate time synchronization means the state of two devices, each having an internal clock, wherein the calculated time of one clock is equivalent to the other clock's time with a precision commonly found in such devices.

The term low-level protocol for performing tasks that require accurate time synchronization

means a protocol for performing tasks that require accurate time synchronization or realtime capabilities.

The term high-level protocol, which does not require accurate time synchronization, means a

protocol for performing tasks that do not require accurate time synchronization or realtime capabilities.

The term connected means in wireless communication with.

The term for each connection of a mobile unit with a base station, running an instance of the low-level protocol at the base station connected with the mobile unit and running an instance of the high-level protocol at the switch means for each connection of a mobile unit with a base station, running at the base station a copy of the low-level protocol supporting only that connection and running at the switch a corresponding separate copy of the high-level protocol supporting only that connection.

I have previously provided you with a written copy of these definitions, and you may use them during deliberations.

Now, with respect to determining induced infringement, once the patent is issued, the owner of a patent has a right to exclude others from making,

using, offering to sell, or selling the patented invention throughout the United States, or importing the patented invention into the United States for a term of 20 years.

Direct infringement occurs when a person, without the owner's permission, makes, uses, offers to

sell, or sells the patented invention anywhere in the United States or imports the patented invention into the United States while the patent is in force.

In this case, to determine whether there is a direct infringement, you must compare the allegedly infringing use with the scope of the patent claims as I have defined them for you.

Now, with respect to induced infringement, Commil asserts that Cisco has induced infringement of the asserted claims. To show inducement, Commil must prove by a preponderance of the evidence that a third party has directly infringed the patent. If there is no direct infringement by a third party, Cisco has not induced infringement.

To prove direct infringement of the asserted claims by a third party, Commil must prove by a preponderance of the evidence that Cisco's customers used the accused products in a manner that performs every step of the claimed method.

A claim limitation is present if it exists in the method practiced by the third party just as it is described in the claim language either I -- either as I have explained that language to you, or if I did not explain it, as it would be understood by one of ordinary skill in the art.

98

If the accused methods omit even a single limitation, then you must find that the claim is not infringed. You must consider each of the patent claims separately.

As just discussed, direct infringement requires a single party to perform each and every step of a claimed method. If you find that each and every limitation of a patented claim is performed, then the claim is infringed, even if the accused methods of use may be more or less efficient or may include additional features or functions not found in the claims.

Whether or not the third party knew that what it was doing was an infringement does not matter for direct infringement. A person may be found to be a direct infringer of a patent even if his or her believed in good faith that what he or she was doing was not an infringement of any patent and even if he or she did not even know of the patent.

If you find that a third party has directly infringed Claim 1, 4, or 6 of the '395 patent, then Commil must prove by a preponderance of the

evidence that Cisco actively and knowingly aided and abetted that direct infringement.

Furthermore, Commil must show that Cisco actually intended to cause the acts that constitute

direct infringement and that Cisco knew or should have known that its actions would induce actual infringement.

Inducing third-party infringement cannot occur unintentionally. This is different from direct infringement, which can occur unintentionally. Cisco also cannot be liable for inducing infringement if it was not aware of the existence of the patent.

If you find that a third party has directly infringed Claim 1, 4, or 6 of the '395 patent and that Cisco knew or should have known that its actions would induce direct infringement, you may find that Cisco induced another to infringe Commil's patent if it provided instructions and directions to perform the infringing act through labels, advertising, or other sales methods.

You may also find that Cisco induced infringement by supplying the components that are used in an infringing manner with the knowledge and intent that its customer would directly infringe by using the components to perform every step of the claimed method.

Now, the asserted claims use the word comprising. When a claim uses the word comprising, comprising means included -- or excuse me – including or containing.

A claim that uses the word comprising or

comprises is not limited to products or methods having only the elements that are recited in the claim but also covers products or methods that add additional elements.

Let's take as an example a claim that covers a table. If the claim recites a table comprising a tabletop, legs, and glue, the claim will cover any table that contains these structures even if the table also contains other structures, such as a leaf or wheels on the legs.

Let's talk about dependent claims. My instructions on infringement so far have related to independent claims. Patent claims may exist in two forms referred to as independent claims and dependent claims.

An independent claim does not refer to any other claim of the patent. Thus, it is not necessary to look at any other claim to determine what an independent claim covers.

Claim 1 of the '395 patent is an independent claim.

A dependent claim refers to at least one other claim in the patent. A dependent claim includes each of the elements of the other claim to which it refers, plus additional elements recited in the dependent claim itself.

101

Claims 4 and 6 of the '395 patent are dependent claims that depend on Claim 1. In order for you to find that Claims 4 or 6 of the '395 patent are infringed, you must first find that Claim 1 is infringed.

If you find that independent Claim 1 of the '395 patent is not infringed, you must also find that dependent Claims 4 and 6 are not infringed.

I will now instruct you as to the calculation of damages should you find that Commil has met its burden on any of its claims.

If you find that Cisco has induced infringement of the asserted claims of Commil's patent, then you should consider the amount of money Commil should receive as damages.

Commil has the burden of proving by a preponderance of the evidence the amount of damages caused by Cisco's conduct. The owner of a patent is entitled to an award of damages adequate to compensate for the infringement, but in no event less than a reasonable royalty for the use Cisco made of the invention.

Commil is asking for damages in the amount of a reasonable royalty. Generally, a reasonable royalty is defined by the patent laws as the reasonable

amount that someone wanting to use the patented invention should expect to pay to the patent owner and the owner should expect to receive.

A royalty is the amount of money a licensee pays to a patent owner for each article the licensee makes or uses or sells or offers to sell under the patent or for the right to use the claimed method.

A reasonable royalty is the amount of money a willing patent owner and a willing prospective licensee would have agreed upon at the time of the infringement for a license to make, use, sell, or offer to sell the invention.

In making your determination of the amount of a reasonable royalty, it is important that you focus on the circumstances that existed in March of 2005 and the facts that existed at that time.

Your determination does not depend on the actual willingness of the parties to this lawsuit to engage in such negotiations. Your focus should be on what the parties' expectations would have been had they entered negotiations for royalties at the time of the infringing activity.

It is the royalty that would have resulted from an arm's-length negotiation between a willing licensor and a willing licensee, assuming both

parties believe the patent claim in question to be valid and infringed.

In determining the reasonable royalty, you should consider all of the facts known and available to the parties as of March 2005. Some of the kinds of factors that you may consider in making your determination are:

(1) whether the patent holder had an established royalty for the invention; in the absence of such a licensing history, any royalty arrangements that were generally used and recognized in the particular industry at that time;

(2) the nature of the commercial relationship between the patent owner and the licensee, such as whether they were competitors or whether their relationship was that of an inventor and a promoter;

(3) the established profitability of the patented product, its commercial success, and its popularity at the time;

(4) whether the patent owner had an established policy of granting licenses or retaining the patented invention as its exclusive right or whether the patent holder had a policy of granting

licenses under special conditions designed to preserve its monopoly;

(5) the size of the anticipated market

for the invention at the time the infringement began;

(6) the duration of the patent and of the license, as well as the terms and scope of the license, such as whether it is exclusive or nonexclusive or subject to territorial restrictions;

(7) the rates paid by the license for the use of other patents comparable to Commil's patent;

(8) whether the licensee's sales of the patented invention promote sales of its other products and whether the invention generates sales to the inventor of his nonpatented items;

(9) the utility and advantages of the patent property over the old modes or devices, if any, that had been used for working out similar results;

(10) the extent to which the infringer used the invention and any evidence probative of the value of such use;

(11) the portion of the profits that should be credited to the invention as distinguished from nonpatented elements, the manufacturing process, business risks, or significant features or improvements added by the infringer;

(12) the opinion and testimony of qualified experts and of the patent holder;

And (13) any other factors which, in your

mind, would have increased or decreased the royalty the infringer would have been willing to pay and the patent owner would have been willing to accept acting as normally prudent business people.

To recover damages based on the entire market value of the accused products, Commil bears the burden to prove that the patented features formed the basis for customer demand or substantially creates the value of the component parts of the accused products.

As I explained earlier, a defendant may be liable for indirectly infringing a patent claim by inducing the direct infringement of another.

Damages for induced infringement are limited to the extent of direct infringement you have found. Damages for inducing infringement should be calculated only as of the date you determine Cisco actually knew of the '395 patent.

You must not award Commil more damages than are adequate to compensate for the infringement nor shall you include any additional amount for the purpose of punishing Cisco or setting an example.

You may not include damages that are speculative, damages that are only possible, or damages that are based on guesswork.

Now, nothing that I may have said or done

during the course of this trial is intended to indicate any view of mine as to which party should or should not win this case. As I instructed you previously, the jury is the sole judge of the credibility of the testimony and the weight to be given the evidence.

Now, these instructions are given to you as a whole, and you are not to single out one instruction alone as stating the lawsuit but must consider the instructions as a whole.

You have heard all of the evidence in this case, and you have heard the argument of counsel.

The Court has given you the charge in this case.

In a few moments, you're going to retire to the jury room, select one of your members to act as foreperson and begin performing the function for which you have been chosen and for which you have been impaneled in accordance with the oath you took as jurors.

You will remember that at the beginning of the trial and throughout the trial, the Court

admonished you not to discuss the case with each other until it was submitted to you.

Well, now is the time for you to begin your discussions, and you certainly may express an

opinion from the evidence that you have heard and use any reasonable means to persuade other members of the jury to your convictions and to your honest opinion.

You are to reach a verdict which speaks the truth and which does justice to all parties without favor, bias, or prejudice in any particular way, either for or against any party to this lawsuit.

In the course of your deliberations, do not hesitate to re-examine your own views and change your opinion if convinced it is erroneous, but do not surrender your honest conviction as to the weight or effect of the evidence solely because of the opinion of your fellow jurors or for the mere purpose of returning a verdict.

The verdict must represent the considered judgment of each juror. In order to return a verdict, it is necessary that each juror agree thereto. Your verdict must be unanimous.

As soon as you have reached a verdict, you'll let this fact be known to the officer, who should be waiting outside the jury room, and he'll report to the Court.

Now, your verdict is going to be in the form of questions for you to answer. You're going to take these questions to the jury room, and when you've

reached a unanimous agreement as to your verdict, you will have your foreperson fill in, date, and sign the form, and then advise the security officer that you've reached a verdict.

During your deliberations, you may have any of the exhibits that have been offered in evidence, and the Court will send them to you upon written request.

If you desire further instructions, your foreperson may make this known in writing, and the Court will try to comply with your wishes. All communications with the Court must be in writing, but at no time should you indicate to the Court or anyone else how the jury is divided in answering any particular question.

Any notes that you have taken during this trial are only aids to memory. If your memory should differ from your notes, then you should rely on your memory and not on the notes. The notes are not evidence.

A juror who has not taken notes should rely on her -- his or her independent recollection of the evidence and should not be unduly influenced by the notes of other jurors. Notes are not entitled to any

greater weight than the recollection or impression of each juror concerning the testimony.

109

I'll now -- I'm going to hand the questions to the briefing attorney, and you're going to follow her to the jury room at this time and select one of your members as foreperson and begin your deliberations.

But before I send you to the jury room, I need to tell you this: Up until now, I've sort of set the schedule, but it's in your hands now, and you can set your own schedule.

If you want to, you know, take breaks every hour, if you want to recess this evening at 5:30 and come back Monday, that's fine with me. If you want to work into the evening tonight, I can make arrangements to stay here. All I ask is that you stay to some point this evening.

All I ask is you let me know what you want to do about going home this evening around 5:00 or so. Then I can make arrangements to stay, if I need to.

But if you want to come back Monday, it's entirely up to you. All I'm telling you is that you're in charge of your own schedule now, okay?

And I'll make myself available. I've got another proceeding that is now past due starting, but I'll be available if there's a note, communication from the jury, okay?

Y'all may now retire to the jury room and begin your deliberations.

(Jury out.)

THE COURT: All right. Court will be in recess pending communication from the jury.

LAW CLERK: All rise.

(Jury deliberations.)

(Jury in.)

THE LAW CLERK: All rise.

THE COURT: Please be seated.

All right. Ms. Petty, I've got a note that says that you all have reached a verdict; is that correct?

THE FOREPERSON: Yes, Your Honor, we have.

THE COURT: Okay. If you'll pass that to Mr. Potts.

Okay. What I'm going to do is I'm going to read the question and then the answer. I'll not read the entire question. I'm just going to read the question number and then the answer.

Question No. 1: Claim 1, yes. Claim 4, yes. Claim 6, yes.

Question No. 2: $63,791,153.00.

Signed the 8th day of April 2011, Marilyn

UNITED STATES DISTRICT COURT
EASTERN DISTRICT OF TEXAS
MARSHALL DIVISION

COMMIL USA, LLC	§	
	§	
vs.	§	CASE NO. 2:07-CV-341-CE
	§	
CISCO SYSTEMS, INC.	§	
	§	

VERDICT FORM

QUESTION NO.1:

Do you find that Commil has proven, by a preponderance of the evidence, that Cisco has induced infringement of claim I, 4, or 6 of U.S. Patent No. 6,430,395 ("the '395 patent")?

For Cisco's accused products, answer "Yes" or "No" for each claim.

Claim 1: yes
Claim 4: yes
Claim 6: yes

If you have found any of the claims infringed (i.e., you have answered 'yes" to any of the claims in question number 1), *then answer question number* 2. *Otherwise, do not answer the following question; the jury foreperson should instead sign and date this Verdict Form and return it to the Security Officer.*

QUESTION NO.2:

What sum of money, if any, if paid now in cash, would fairly and reasonably compensate the plaintiff as a reasonable royalty for any infringement you have found?

Answer in dollars and cents, if any, for a reasonable royalty.

Answer: $63,791,153

Signed this 8th day of April, 2011.

[ENTERED OCTOBER 8, 2009]

IN THE UNITED STATES DISTRICT COURT
EASTERN DISTRICT OF TEXAS
MARSHALL DIVISION

COMMIL USA, LLC,	§
	§
Plaintiff,	§
	§
v.	§
	§
CISCO SYSTEMS, INC. and ARUBA NETWORKS, INC.,	§
	§
Defendants.	§
	§

CIVIL ACTION NO. 2:07-cv-341

JURY TRIAL DEMANDED

PLAINTIFF'S FOURTH AMENDED COMPLAINT AND JURY DEMAND

Plaintiff Commil USA, LLC ("Commil USA") files this Fourth Amended Complaint and Jury Demand against Defendants Cisco Systems, Inc. and Aruba Networks, Inc, (collectively, "Defendants") and alleges as follows:

I. PARTIES

1. Commil USA is a limited liability company organized under the laws of the State of

Texas. Commil USA maintains its principle place of business at 10655 Six Pines Drive, Suite 260, The Woodlands, Texas 73380.

2. Upon information and belief, Cisco Systems, Inc. ("Cisco") is, and at all relevant times mentioned herein was, a corporation organized and existing under the laws of the State of California with its principle place of business at 170 West Tasman Drive, San Jose, California 95134. Cisco has entered an appearance and can be served through its counsel of record. Cisco manufactures and sells equipment for use in the wireless networking, voice over internet protocol and other technology areas

3. Upon infonnation and belief, Aruba Networks, Inc. ("Aruba") is, and at all relevant times mentioned herein was, a corporation organized and existing under the laws of the State of Delaware with its principle place of business at 1322 Crossman Ave., Sunnyvale, California 94089-1113. Aruba has entered an appearance and can be served through its counsel of record. Aruba manufactures and sells equipment for use in the wireless networking, voice over internet protocol and other technology areas.

II. JURISDICTION AND VENUE

4. This action arises under the patent laws of the United States, Title 35 United States Code § 1, *et seq*. This Court has exclusive subject matter jurisdiction over this case for patent infringement under 28 U.S.C. §§ 1331 and 1338(a).

5. Personal jurisdiction exists generally over Cisco because it has sufficient venue contacts with the forum as a result of business conducted within the State of Texas and within the Eastern District of Texas. Cisco, directly or through subsidiaries or intermediaries, offers for sale, sells, imports, advertises, and markets products and services within the Marshall Division of the Eastern District of Texas that infringe the patents-in-suits described more particularly below. Jurisdiction and venue is also proper against Cisco as a result of its internet marketing activities. Cisco has purposefully placed one or more of its infringing products into the stream of commerce with the expectation that they will reach consumers in the Eastern District of Texas. These infringing products have been, and continue to be, purchased by consumers in the Eastern District of Texas. Cisco has committed the tort of patent infringement within the state of Texas and, more particularly, within the Eastern District of Texas. In addition, Cisco's contacts with the state of Texas and the Eastern District of Texas are continuous and systematic thereby invoking general jurisdiction.

6. Personal jurisdiction exists generally over Aruba becanse it has sufficient venue contacts with the forum as a result of business conducted within the State of Texas and within the Eastern District of Texas. Aruba, directly or through subsidiaries or intermediaries, offers for sale, sells, imports, advertises, and markets products and services within the Marshall Division of the Eastern District of Texas that infringe the patents-in-suits described more particularly below. Jurisdiction and

venue is also proper against Aruba as a result of its internet marketing activities. Aruba has purposefully placed one or more of its infringing products into the stream of commerce with the expectation that they will reach consumers in the Eastern District of Texas. These infringing products have been, and continue to be, purchased by consumers in the Eastern District of Texas. Aruba has committed the tort of patent infringement within the state of Texas and, more particularly, within the Eastern District of Texas. In addition, Aruba's contacts with the state of Texas and the Eastern District of Texas are continuous and systematic thereby invoking general jurisdiction.

7. Venue is proper in the Eastern District of Texas under 28 U.S.C. §§ 1391(b) - (c) and 1400(b).

III. PATENT INFRINGEMENT

8. Commil USA incorporates the allegations set forth in paragraphs 1-7 above.

9. On August 6, 2002, the United States Patent and Trademark Office ("USPTO") duly and legally issued United States Patent No. 6,430,395 ("'395 Patent"), entitled "Wireless Private Branch Exchange (WPBX) and Communicating Between Mobile Units and Base Stations." Commil USA is the owner by assignment of all right, title and interest in and to the '395 Patent with the exclusive right to enforce the '395 Patent and to collect damages for its infringement. A copy of the '395 Patent is attached as Exhibit A. The '395 Patent is valid and enforceable.

10. Upon information and belief, each of the Defendants manufacture, make, use, practice, provide, supply, sells, import, distribute and/or offer for sale products that infringe one or more claims of the '395 Patent. At no time have Defendants been licensed under Commil USA's Patents.

11. As a result of the foregoing acts, Commil USA alleges, upon information and belief, that Defendants, in violation of 35 U.S.C. § 271 have been and are currently directly infringing, contributorily infringing and/or inducing infringement of the '395 Patent.

12. Commil USA has been and continues to be harmed by Defendants' conduct and is therefore entitled to recover damages adequate to compensate for the infringement, (and, if necessary, related accountings), in an amount to be determined at trial, but in no event less than a reasonable royalty.

13. The infringement of the '395 Patent by Defendants has caused and will continue to cause Commil USA irreparable harm unless preliminarily and permanently enjoined by the Court. Commil USA has no adequate remedy at law.

VI. JURY DEMAND

14. Comrnil USA hereby requests a trial by jury pursuant to Rule 38 of the Federal Rules of Civil Procedure.

VII. PRAYER FOR RELIEF

Commil USA respectfully requests that the Court finds in its favor and grant it the following relief:

A. A Judgment that the '395 Patent is valid and enforceable;

B. A Judgment that Defendants have been and are currently infringing, contributorily infringing and/or inducing others to infringe one or more claims of the '395 Patent;

C. A Judgment for a permanent injunction enjoining Defendants from any further acts ofinfringement of the '395 Patent;

D. A Judgment and Order requiring Defendants to account for and pay to Commil USA damages adequate to compensate it Defendants' infringement of Com mil USA's Patents in an amount to be determined at trial, but in no event less than a reasonable royalty;

E. An Order pursuant to 35 U.S.C. § 285, deeming this to be an "exceptional case" and thereby awarding to Commil USA its reasonable attorneys' fees, costs and expenses;

F. Judgment awarding Commil USA pre-judgment and post-judgment interest on the damages caused to it by reason of Defendants' infringing activities and other conduct alleged herein; and

G. Such other and further relief as the Court deems just and proper.

Respectfully submitted,

/s/Mark D. Strachan
Mark D. Strachan
State Bar No. 19351500
Mark S. Werbner
State Bar No. 21179700
Richard A. Sayles
State Bar No. 17697500
Eve L. Henson
State Bar No. 00791462
Chris W. Hogue
State Bar No. 24050773
SAYLES WERBNER
A Professional Corporation
4400 Renaissance Tower
1201 Elm Street
Dallas, Texas 75270
(214) 939-8700 (Telephone)
(214) 939-8787 (Facsimile)

CERTIFICATE OF SERVICE

The undersigned hereby certifies that a true and correct copy of the foregoing document was served on all parties via electronic delivery or U.S. Mail this 8th day of October, 2009.

/s/ Mark D. Strachan
Mark D. Strachan

IN THE UNITED STATES DISTRICT COURT
FOR THE EASTERN DISTRICT OF TEXAS
MARSHALL DIVISION

COMMIL USA	* Civil Docket No.
	* 2:07-CV-341
vs.	* Marshall, Texas
	*
	* May 12, 2010
CISCO SYSTEMS, INC., ET AL	* 8:30 A.M.
	*

TRANSCRIPT OF JURY TRIAL
BEFORE THE HONORABLE
CHAD EVERINGHAM
UNITED STATES MAGISTRATE JUDGE

APPEARANCES:

FOR THE PLAINTIFFS:

MR. MARK S. WERBNER
MR. RICHARD A. SAYLES
MR. MARK D. STRACHAN
MS. EVE L. HENSON
MR. CHRISTOPHER W. HOGUE
Sayles Werbner
1201 Elm Street
4400 Renaissance Tower
Dallas, TX 75270

FOR THE DEFENDANTS:

MR. JEFFREY E. OSTROW
(CISCO) MR. HARRISON J. FRAHN, IV
MR. PATRICK E. KING
Simpson Thacher & Bartlett
2550 Hanover St.
Palo Alto, CA 94304

APPEARANCES CONTINUED ON NEXT PAGE:

COURT REPORTERS:

MS. SUSAN SIMMONS, CSR
MS. SHELLY HOLMES, CSR
Official Court Reporters
100 East Houston, Suite 125
Marshall, TX 75670
903/935-3868

(Proceedings recorded by mechanical stenography, transcript produced on CAT system.)

66

proof of concept in the Wi-Fi product, did it?

A. I don't remember. I saw the documents, but Idon't remember that personally.

Q. Do you have any reason to believe they did?

A. No. I don't remember one way or another.

Q. Do you recall during the meetings – you testified about a minute ago about using the Cisco facilities in Israel.

A. Yes.

Q. Do you recall during those meetings if you talked about the patent?

A. In those meetings, I doubt it, but I don't know. Maybe introduction meeting or something.

Q. Sir, you stand to receive 6 percent of the proceeds in this litigation, right?

A. Yes, sir.

Q. When was the last time you saw Mr. Arazi?

A. Yesterday morning.

Q. Where was that?

A. In the hotel in Marshall.

Q. He came here to Texas?

A. Yes, sir.

Q. To help out with this trial?

A. Yes, sir.

Q. Where is he now?

A. I don't know.

Q. Do you know if he went back to Israel?

A. I think so.

MR. OSTROW: I don't have anything else, Your Honor.

THE COURT: Okay.

MR. WERBNER: Your Honor, I have no questions.

May the witness be excused?

THE COURT: Any objection?

MR. OSTROW: No, sir.

THE COURT: Okay. You're finally excused.

THE WITNESS: Thank you very much.

THE COURT: You may step down. Who will be your next witness?

MR. SAYLES: May it please the Court. Our next offer of proof will be some stipulations I would like to present to the jury, and I would respectfully request that the Court inform the jury of the effect and nature of stipulations.

THE COURT: Of course.

Ladies and Gentlemen, what you're about to hear are what are called stipulations that are being offered to you

68

Oftentimes, in the course of -- of a lawsuit, the attorneys for both sides will get together and agree or stipulate as to the existence of certain facts. What that does is alleviate one side or the other from the -- the need to present to you evidence of those facts.

In other words, the stipulations you're about to hear, the parties agree that these facts are true, and you are to accept the stipulations as true without hearing any further evidence as to these facts.

That being said, you may present your stipulations.

MR. SAYLES: All right. The parties agree the following facts are uncontested:

1. Plaintiff Commil is a limited liability corporation organized under the laws of Texas and maintains its principal place of business at 10655 6 Pines Drive, The Woodlands, Texas.

Stipulation No. 4. Nitzan Arazi, Haim 20 Barak, and Yaron Soffer filed provisional patent applications with the United States Patent &

Trademark Office on April the 7th, 2000, and then again on June 1, 2000, covering their inventions.

No. 5. On February 12th, 2001, the named inventors, Nitzan Arazi, Haim Barak, and Yaron Soffer,

69

assigned the rights to their invention to Commil, Limited.

No. 6. On February 16th, 2001, the named inventors filed an application for the issuance of a patent on their invention, which was assigned No. 9,784,109.

No. 7. On November 15th of 2001, their application was published.

No. 8. On August the 6th, 2002, their inventions were issued a patent by the United States Patent & Trademark Office, the '395 patent.

No. 9. On March 18th, 2007, Commil, the Plaintiff, became the assignee of the '395 patent.

Those are the stipulations at this time.

And at this time, Your Honor, we would call, by way of deposition, an adverse witness, Bob O'Hara, who is a former Cisco employee.

After Cisco was acquired by Airespace, he was the Chief Technical Officer for Cisco. He is now retired from Cisco.

The total time is 26 minutes. The time is divided 24 minutes to the Plaintiff and 2 minutes to the Defense.

MR. FRAHN: Your Honor --

THE COURT: Yes.

130

Q. All right. So you had a law firm that specializes in patent prosecution evaluate it from that standpoint?

A. Yes. Yes. They –

Q. And whom else did you have help on this team?

A. There was also, I believe, a university engineering professor, who I think, you know, did things like reverse engineering these products and figuring out how -- you know, how they work, looking at source code and things of that nature. So -- so there was -- there was also a -- there was also a -- what I understood was one of the biggest experts on patent licensing who had done licensing negotiations with -- with Japan on some – on some very important products.

So there was a whole team turning this thing upside down doing -- doing searches just to make sure that the U.S. Patent Office -- you know, really just -- just looking at it upside down.

Q. All right. So that's what you did.

About how long did you spend doing your homework before you bought this patent?

A. I don't remember exactly, but I think it was, you know, months.

Q. And did you have to spend some money to pay

these persons even before you were able to make a decision?

A. Yes. I don't remember the exact amount, but I believe that it was over a hundred thousand dollars that I spent just checking this patent out before I ever thought about actually buying it.

Q. All right. Now, Mr. David, we all know that you did indeed buy it. So at a point in time, did you decide to make the purchase?

A. Yes, I did.

Q. All right. Now, I don't want to go into detail about the purchase, but, ultimately, what was the basic term of the purchase? Did you get it all?

A. No. The -- the terms were that it was $400,000 in cash upfront, and then I also had to give them a 10-percent back-end.

It was a little more complicated than that because it was like a step -- it was like 10 percent of the amounts over 10 million and then like 5 percent between 5 and 10 million and so on, something like that. So -- so it was -- but, generally, I was referring to it as a 10-percent back-end.

Q. And with whom were you dealing at the time you were making the acquisition of the patent rights?

A. I was dealing with this venture capital fund

132

that the jury heard about earlier where Mr. -- or it was put up on the screen. These were the people who funded and financed Commil and later foreclosed on their patent.

And they were basically trying to get this thing off the books because -- it was like a distress sale, like, you know, when their business – their business is investing in companies, and when those fail, they want to get -- you know, foreclose, get the assets off the books before they get caught up in bankruptcy and stuff and move on.

And so it was -- that was the -- that was the context.

Q. All right. And it was mentioned by Mr. Soffer this morning that the inventors retained an interest.

Would you explain that, please?

A. Yes, sir.

After the 10-percent back-end that the venture capital fund kept, then you're left with 90 -- I'm left with 90 percent. And then out of that 90 percent, of course, there's, you know, fees and expenses and so on.

And then the inventors get their 18 percent. And then out of -- you know, whatever's left out of that, there's actually a number of my family members that I've assigned shares to, my kids, my

parents, that kind of thing.

And so I don't -- getting down to the net, I'm not sure, you know, what all that calculates out to at this point.

Q. All right. And are you an officer of Commil USA, the Plaintiff in this case?

A. Yes, I am. I believe I'm the executive officer.

Q. And was -- I think this is a stipulated fact, but I want to cover it just briefly with you.

After the '395 was acquired, was it indeed assigned to Commil USA, the Plaintiff in this case?

A. Yes, sir.

Q. All right. Now, I want you to tell the ladies and gentlemen of the jury why it is that you bought this patent. What was the purpose?

A. Well, basically, to enforce it.

Q. And what can you do with a patent?

A. Enforce it and make sure that -- that if anybody is infringing it, that they pay the royalty that -- that it's entitled to.

Q. And let's just be straight up here. Does Commil USA have any other business other than the enforcement of this patent?

A. No, sir.

IN THE UNITED STATES DISTRICT COURT
FOR THE EASTERN DISTRICT OF TEXAS
MARSHALL DIVISION

COMMIL USA	* Civil Docket No.
	* 2:07-CV-341
vs.	* Marshall, Texas
	*
	* May 14, 2010
CISCO SYSTEMS, INC., ET AL	* 8:30 A.M.
	*

TRANSCRIPT OF JURY TRIAL
BEFORE THE HONORABLE
CHAD EVERINGHAM
UNITED STATES MAGISTRATE JUDGE

APPEARANCES:

FOR THE PLAINTIFFS:

MR. MARK S. WERBNER
MR. RICHARD A. SAYLES
MR. MARK D. STRACHAN
MS. EVE L. HENSON
MR. CHRISTOPHER W. HOGUE
Sayles Werbner
1201 Elm Street
4400 Renaissance Tower
Dallas, TX 75270

FOR THE DEFENDANTS:

(CISCO)

MR. JEFFREY E. OSTROW
MR. HARRISON J. FRAHN, IV
MR. PATRICK E. KING
Simpson Thacher & Bartlett
2550 Hanover St.
Palo Alto, CA 94304

APPEARANCES CONTINUED ON NEXT PAGE:

COURT REPORTERS:

MS. SUSAN SIMMONS, CSR
MS. SHELLY HOLMES, CSR
Official Court Reporters
100 East Houston, Suite 125
Marshall, TX 75670
903/935-3868

(Proceedings recorded by mechanical stenography, transcript produced on CAT system.)

position is that under the legal standard of clear and convincing evidence, where the witness has said both things, that it cannot measure up to clear and convincing evidence as a matter of law.

The additional point why there is a lack of enablement is that Dr. Lansford did not do a detailed analysis of the specification, and that's what he was required to look at, is the specification in 2000 when the application was filed. He did not do that.

Next point. We move for judgment as a matter of law on the issue of obviousness under Section 103. There were no combinations of prior art that were put forth through expert testimony and suggested or argued to the jury that should be considered to invalidate this patent on obviousness grounds, and we ask that judgment as a matter of law be granted on that.

The next point is, it is actually –

THE COURT: Are y'all pursuing obviousness?

MR. FRAHN: Yes, Your Honor.

THE COURT: All right.

MR. FRAHN: Under 802.11, I believe, sir.

THE COURT: Okay.

MR. SAYLES: That the -- the next point

147

is, Your Honor, in the pretrial order and in the pleadings, prior invention is alleged to invalidate this patent under 102, Subsection 9. There was legally insufficient evidence presented to support a submission of prior invention to invalidate this patent.

The next point, we move for judgment as a matter of law on the written description position that has been taken in the pretrial order.

There was no analysis on a claim-by-claim basis of whether the written description was sufficient to support the claims that are in issue in this case and such is required in order to submit that to the jury.

There's legally insufficient evidence for that. Finally, Your Honor, both inequitable conduct and prosecution history estoppel are alleged in the pretrial order, and they are alleged in the pleadings, and we would move for judgment as a matter of law on those, there being no evidence submitted on them. And so -- and additionally, if there's an argument that the standard 802.11 is somehow invalidating prior art, it was not disclosed in the contentions, the invalidity contentions, as prior art.

So with those positions that I've outlined, we ask for a judgment consistent with the positions that I've put forward dismissing with

prejudice those claims that are based on these facts. And with that, I'll conclude our motion for judgment as a matter of law.

THE COURT: Okay. While you're up there –

MR. SAYLES: Yes, sir.

THE COURT: -- let me ask you one question. Is the state of the record undisputed that the accused access points can be used in both fat and thin modes?

MR. SAYLES: I heard that testimony today, and I honestly do not know the answer to your question. I heard it for the first time when I was sitting right over there.

THE COURT: Well, it was talked about by the damages expert, by flipping of the switch. But, you know, if y'all can talk to your -- I mean, I need an answer to that, because, you know, if that is the case, then my inclination is going to be grant the motion that was made at the close of the -- close of your case on contributory. I'm going to take that out of the charge.

I think if that's the case, there's a substantial non-infringing use, and I just -- you know, I'm trying to submit what's -- the claims that are really claims –

MR. SAYLES: Yes, sir.

THE COURT: -- Mr. Sayles.

MR. SAYLES: Yes, sir.

If someone on my team actually knows the answer, can I invite them up to address it now?

THE COURT: Yes.

MR. WERBNER: I -- I think I can say that that is the state of the evidence, and I know that we've been discussing the withdrawal of that and

would like, with the Court's permission, to do that over the weekend. But I think where you're going is where we'll be coming, especially now.

THE COURT: Well, just -- I'm -- I don't want to submit something that's just –

MR. WERBNER: Well, we're -- we're looking also at potentially -- not every claim that we've pled, but, again, we haven't had a chance to fully confer on that.

THE COURT: The charge that you've been provided has contributory infringement in it, but I think that given what I think the record is, the one that I give to the jury is not going to have that in there.

MR. SAYLES: All right, sir.

THE COURT: But I need to hear your

IN THE UNITED STATES DISTRICT COURT
FOR THE EASTERN DISTRICT OF TEXAS
MARSHALL DIVISION

COMMIL USA	* Civil Docket No.
	* 2:07-CV-341
vs.	* Marshall, Texas
	*
	* April 5, 2011
CISCO SYSTEMS, INC., ET AL	* 1:15 P.M.
	*

TRANSCRIPT OF JURY TRIAL
BEFORE THE HONORABLE
CHAD EVERINGHAM
UNITED STATES MAGISTRATE JUDGE

APPEARANCES:

FOR THE PLAINTIFFS:

MR. MARK S. WERBNER
MR. RICHARD A. SAYLES
MR. MARK D. STRACHAN
Sayles Werbner
1201 Elm Street
4400 Renaissance Tower
Dallas, TX 75270

FOR THE DEFENDANTS:

MR. HENRY B. GUTMAN
MR. JEFFREY E. OSTROW
(CISCO) MR. HARRISON J. FRAHN, IV
MR. JONATHAN SANDERS
Simpson Thacher & Bartlett
2550 Hanover St.
Palo Alto, CA 94304

APPEARANCES CONTINUED ON NEXT PAGE:

COURT REPORTERS:

MS. SUSAN SIMMONS, CSR
MS. SHELLY HOLMES, CSR
Official Court Reporters
100 East Houston, Suite 125
Marshall, TX 75670
903/935-3868

(Proceedings recorded by mechanical stenography, transcript produced on CAT system.)

42

type that do not provide the roaming capability.

Q. Do you have to turn it on as a lightweight access point in order to download this software to turn it into an autonomous one?

A. Well, you -- it's purchased as a lightweight, so when it's turned on, it automatically is lightweight until configured differently. So yes, to perform the download, it starts in a lightweight form.

Q. All right. Did you -- from all the literature that you looked at, was that the normal and intended use of the sale of these lightweight access points?

A. I'd say just the opposite. Based on the literature I saw, some of which were marketing, some of which were course material instructions, some of which were -- were presentations, what I saw was just the opposite.

In fact, the presentations were showing that they were teaching the people who were actually going to sell these products to make sure that you used the following mechanisms or ways to try to get people to try to move away from fat to the lightweight.

Most of the direction and intent was to move toward this higher dollar profile product that would permit -- would promote the enterprise-type operation.

I saw it even, given some examples in these

slides presentations, as if you do get pushed back from someone, this is what you say. And I'm paraphrasing that, but generally that was the intent, to move people toward the lightweight and away from the fat.

Q. Did Cisco, from your work, give instructions to customers on how to turn in the old

autonomous ones into the light -- lightweight ones that did the things that you've said they do?

A. I think your question was how to turn in the autonomous to convert to the lightweight?

Q. Let me repeat it.

What -- what evidence, if any, did you see that Cisco gave instructions to customers or potential customers on how to migrate into the lightweight access points and the new architectural system?

A. Well, they indicated in the literature the -- the literature that I read was that if you do have a -- a customer that is autonomous, everything that they have is autonomous, you can -- the -- admonition was to invite them to give consideration to the future and where the future was going and what they would need in order to effect a larger enterprise.

And so it would be the right thing to do to go ahead now and put the infrastructure in place, and it would cost less than if you did it later.

Q. But did they merely just sell them, or did they give any instructions to the customers on how to use a -- an architecture with this split division that you've said?

A. Oh, as I recall, they were promoting the architecture, and so much of the literature, the sales

brochures, the advertisements, the presentations, were drawn to how to configure your system, and with a statement that Cisco themselves would partner with you to come in and show how to do it and to provide that mechanism for the transition.

Q. I want to show the jury some of the documents you've referred to, but before I leave this chart and these steps of the claim, this dividing -- we heard Mr. Gutman talk about the dividing a short-range communication.

Who -- who decided in the design phase where the dividing would occur?

A. It certainly would be an employee of Cisco.

Q. Or maybe Airespace?

A. It would be something under the jurisdiction of Cisco for the purpose of generating or providing the particular architecture.

Q. Now, when you used the test equipment, what steps of Claim 1, if any, did you perform?

A. The fact that the system -- the system, as configured, necessarily performed all the steps, I, as a user, or I, as a person testing it, performed it because of the fact that the system necessarily did all the steps.

Q. How, when you're using this -- these Cisco products as normally used and intended to be used, if I use it, how are these things happening?

If Cisco divided it when they designed it, do I have anything to do when I'm using that equipment?

Does the equipment have anything to do with the dividing, or is that something that happened years before?

MR. GUTMAN: Objection, Your Honor, compound.

THE COURT: Overruled.

A. The systems, as designed by Cisco or under the control of Cisco, the systems are configured to operate a certain way. And the systems that are designated and sold as lightweight systems, the access points can only work with the controller to effect the full scope of -- of the communication.

So these configured systems that invoke a switch controller, base station access point to build this kind of a communication network, they have been

programmed with their software that's been – the programmer generates the software. They embed the software in each of these access points and switches, and that's called firmware.

That firmware then provides the engine by which the whole system operates. That's already burned in, if you will, to the system. The system has no ability to operate in any way other than the way it has been programmed to operate. It necessarily operates the way it's been programmed.

What has been -- what has occurred in each of these light access points is that the software, as firmware in the device, has been programmed to specifically split the media access control, the MAC, around the boundary of what's required to be -- what's required to be time sensitive, in terms of the wireless communication and what is not. That's embedded in the system.

So, therefore, when the system is architecturally configured in a network and the user uses the system, the system necessarily performs all of those steps, because that's the way it's been designed, and the user, or me, if I'm testing it using such a system, I'm using that system in an infringing way.

MR. WERBNER: May I get my laptop, Your

Honor?

THE COURT: Yes.

MR. WERBNER: May I set these on the table?

THE COURT: Yes.

Q. (By Mr. Werbner) I've got this Cisco 4400 controller that you purchased and tested and that Cisco lightweight access point.

I've turned on my laptop, and pretend that I've just turned on the switch and we have power to these devices. This one's up there, not attached to me, but it's connected to that. It's powered up, and I'm here.

What is happening at that point insofar as each and every one of these elements?

A. First, with the assumption that you have a -- a controller, which is a switch, connected to the access point, the light access point, through a wire, ethernet, with that connection and everything powered up, now the access point will wirelessly communicate.

Now, the way in which it wirelessly communicates, according to the protocol that is – that is embedded in the lightweight -- well, it used to work.

Q. Well, again, let's pretend that it still works.

A. Okay.

Q. Sorry.

A. It's a very robust product.

What occurs is, when the system is activated, the access point will go through its procedures to establish what is necessary to get it ready for communication.

Once it is ready, it then will go into what's called an idle state. And the idle state will periodically be sending out what's called a beacon. The beacon is a signal that is transmitted through the -- through the air and is broadcast such that if there is -- for instance, the Apple commuter that comes within its range -- it has to come within the range -- the Apple Computer, assuming its wireless card is turned on –

Q. Well, if I don't drop it, it is.

A. -- the wireless -- please don't drop the computer. The -- the computer is wirelessly looking for some beacon. And the way it does it is, the beacon that's transmitted out of the access point is transmitted along one channel, one set of frequencies, and the computer, which is the mobile unit, when it comes within range it is configured to actually sequence

through the various frequencies look for for example a channel in which it finds a beacon.

When it finds a channel, it hones in on that channel and sends back to the access point something that is termed in the art as a probe request. The access point receiving that probe

request on the channel sends back on that channel a probe response.

What occurs after that is, it goes -- by the way, inside the access point, what is occurring every time it sends a probe beacon, then it's a probe response. These are different states in which the computer inside of the -- of the access point is operating.

So it moves from state to state as it goes through this sequence of events. Once the probe response is sent back, then there is an attempt to join or to connect the two together, and there's some higher level stuff that goes on to ensure that you do have a connection.

Once there's a connection that's made, now communication can start. The communication is done, according to the 802.11 protocol, on a -- it's called a packet-by-packet basis.

The information in the mobile unit, the – the computer, the notebook computer, takes whatever

A. I'm not sure I understood it.

Q. I'm examining if you have an opinion whether Cisco, based on their involvement with these products and their involvement with these customers, if there's a -- a reasonable basis from which you can see that they would think that these products do not cover the claims of the '395 patent?

A. No, I see no reasonable way truthfully. The claim only has a couple of elements. It's not – not like a -- a large recipe that one has to look at. You're looking for a -- just a couple of very important key ingredients that are fundamental to a new architecture.

And it's easy to see, easy to observe, easy to make a decision as to whether you are dividing realtime or not and whether or not the protocol is being practiced in a low-level in one location and a high-level in another.

All the documents point to that. The systems are sold and configured that way. In fact, since that is the way they operate, it's literally impossible for a user of the system not to practice the invention when they use it.

MR. WERBNER: May I approach counsel table, Your Honor?

123

THE COURT: Yes.

Q. (By Mr. Werbner) If a large sophisticated technology company involved in wireless networking products has this patent for four years, is it hard or easy, confusing, vague -- you put it in whatever words you want -- to understand that -- that these products are performing the dividing, the running, and the – for each connection, as stated in the patent?

A. I don't think it's difficult at all to observe that and make that decision.

Q. Should a company -- should they have known when they had this patent -- whether they knew or they didn't, should they have known when they had this patent at least four years ago, that these products were performing those steps of Claim 1, 4, and 6?

A. In my opinion, they should have known.

Q. I want to just go back over one aspect of this Claim 1, because I want it to be very clear. You covered it, but I might not have caught it all because I was looking at documents.

Are we -- can you see this, Mr. McAlexander?

A. Sure.

Q. I think we spent plenty of time on the – no pun intended -- time/realtime, but in any case, this is the -- the area I want to be sure I understand where it

says: For each connection, running an instance of the low-level protocol at the base station, running an instance of the high-level protocol at the switch.

You see where I'm talking about?

A. Yes, I do.

Q. Would you explain, based on the Court's construction of the words in there and your work on the case, how the accused products perform in that way?

A. Certainly. If I can, possibly on the screen, could we also put the claim in its entirety, so --

Q. Sure. I think it's 1601 or...

A. Okay. This particular element, the last element of the claim, Claim 1, states: For each connection of a mobile unit with a base station, running an instance of the low-level protocol at the base station connected with the mobile unit, and running an instance of the high-level protocol at the switch.

The Court has provided a definition for this particular element, and I'll read that into the record.

It says: For each connection of a mobile unit with a base station, running at the base station a copy of the low-level protocol supporting only that connection and running at the switch a corresponding separated copy -- excuse me -- a corresponding separate copy of the high-level protocol supporting only that

connection.

So with that construction, there is a requirement that the predicate is: For each connection. So based on that and what -- for each connection of what? For each connection of a mobile unit with an access point or a base station.

So what -- what is being directed here by this claim limitation is, for each -- for each of the wireless connections that are occurring between an access point and a mobile unit, something has to happen, and there's two specific parts of this that have to happen.

The first is, you have to run an instance -- the Court has construed it as a copy -- of the low-level protocol at the base station, at the access point, connected to the mobile unit, and you run an instance, a copy, of the high-level protocol at the switch.

So with that characterization, let me describe what I know about the way the products actually implement this.

The base station or access point communicates with a mobile unit using an 802.11-type protocol.

That's a standard that's provided to the industry. It's something the industry has agreed to in terms of a protocol. But the protocol itself is just –

and unique for that communication.

So these are two examples. And the wireless network that I have seen with Cisco also is a shared protocol, but it's a shared protocol that can only operate on one instant at a time.

But every time there's a communication between the access point and a mobile unit, that instance or copy of the protocol is running.

Q. Mr. McAlexander, do you know Roger Carlile?

A. Yes.

Q. He's going to calculate damages -- calculate a royalty for the use of the license. Have you met with him to give your technological experience to him so that he is getting the benefit of that technology as part of his work in measuring the royalty?

A. On several occasions, I have, yes.

Q. Tell the jury about that, when, how long, what was done, so that when he testifies, the jury and the Court will understand the technology that he received from you.

A. Well, I do recall having had conversations with him somewhere, meetings and sometimes it was phone conversations, but I recall

having conversations with him during the latter part of 2009 or part of 2009.

I recall having communication with him in

2010, early part of 2010. I can also recall having some communication with him recently before this trial started.

Q. And did he do anything with certain licenses and technology fields that he asked you to do something with?

A. Yes. As a part of his reporting requirements, he was, as I recall, looking at various licenses and -- that might be pertinent to the evaluation for him in this case.

And so he had provided a list of those and some abstracts and some information on them. And I reviewed those licenses and provided some technical opinion as to the -- the applicability of some of those to this matter.

Q. And was there sorting that he did down to -- from a larger number of licenses to a smaller based on your -- your finding the most technologically comparable?

A. As I recall, he had independently, separately determined a shorter list. I was also asked to do the same apart from him. And then I provided my short list of information to him.

Q. Finally, Mr. McAlexander, I asked you a lot of questions about your opinions today. In your opinion,

did Cisco induce the customers that it sold these infringing or accused products to?

And by that, I take it you're familiar – you have some understanding about what that requires, correct?

A. I believe I have some understanding, yes.

Q. All right. In your opinion, from all that you reviewed, from the nature of the products, from the clarity of these issues, from everything, what is your opinion as to whether or not Cisco actively encouraged, instructed these customers on how to use the product, after they knew of the patent, when they knew or should have known about the resulting performance of the products by the customers?

A. Well, based on the documents and the deposition testimony I have listened to or heard, a number of the documents I've presented today, it is clear to me that, first, the systems -- the controllers and access points are configured in such a way that anytime they are operated, they practice the claimed inventions Claims 1, 4, and 6 of the -- of the patent that's in suit.

So to me, the configuration of the systems provides that.

Number two, any system that is sold and used

as intended, used as it is configured by Cisco, is going to necessarily practice the invention, because the configuration of the system practices the invention, the Cisco system.

So, therefore, any user who uses that infringing system is going to be an infringer. And I think the word is direct. In fact, it is -- it is a -- that person or user is a direct infringer, whether it's a person off the street or a customer or an employee of Cisco.

It is a direct user, because when they turn the system on and they operate it in the way in which it's configured to operate, it will practice the claimed invention.

Now, the inducement aspect, all the documents that I've looked at, in terms of frequently asked questions and responses to that, presentation material, website information, instructions on how to configure, how to put the product in place, their partnership, the partnering with the clients to help them put the architecture in place that will, when put in place and operative, will perform the claimed invention, all of this to me goes to the aspect of inducement.

This is after knowledge of the patent, which occurred, I believe, 2004. But subsequent to

that, these -- these presentations -- and I also mentioned they have a course that they provide to help customers understand the wealth of potential with this unified network and how to operate it.

And with the documents that I also reviewed, some of which we talked about today, where they instructed their person, their people who are going to sell this product or to represent the product how to -- how to sway the understanding of the client base and the new users to move them toward this new architecture, away from the fat access point, all of this says that, yes, there is an inducement.

They are contributing -- they are -- they're compel -- they're almost compelling, but I'll fall short of that word. They are really instructing people and moving people in this direction, to use this infringing architecture and use it in an infringing way.

I think they should have known, based upon the claimed invention and -- and what it requires. Especially with their understanding of the Split MAC architecture divided between realtime and non-realtime, they should have known.

Q. And is your testimony in the regard you just gave as to Claim 1 or -- or 4 or 6?

A. That is with regard to Claim 1, based upon the

protocol, the division of the protocol. It's with regard to Claim 4, because the way in which they have architected their system for communication between the access point and the controller is covered by Claim 4. And Claim 6 adds the additional criteria for the type of mobile units that are to be considered as a part of this framework. So I -- in my opinion, it's all three, Claims 1, 4, and 6.

MR. WERBNER: Your Honor, we'll pass the witness.

THE COURT: All right. We'll pick up with cross-examination tomorrow morning at 8:30, Ladies and Gentlemen. I'll excuse you at this time to go home. Travel safely, and remember my prior instructions about not talking about the case.

LAW CLERK: All rise for the jury.

(Jury out.)

THE COURT: All right. We'll be in recess until 8:30 in the morning. I'm going to get with Ms. Lockhart, and I'll give you the time that you've used today.

MR. WERBNER: Thank you, Your Honor.

MR. STRACHAN: Thank you, Your Honor. Have a nice night.

(Court adjourned.)

140

CERTIFICATION

I HEREBY CERTIFY that the foregoing is a true and correct transcript from the stenographic notes of the proceedings in the above-entitled matter to the best of my ability.

/s/_____ _____
SUSAN SIMMONS, CSR Date
Official Court Reporter
State of Texas No.: 267
Expiration Date: 12/31/12

/s/_____ _____
SHELLY HOLMES, CSR Date
Deputy Official Court Reporter
State of Texas No.: 7804
Expiration Date 12/31/12

IN THE UNITED STATES DISTRICT COURT
FOR THE EASTERN DISTRICT OF TEXAS
MARSHALL DIVISION

COMMIL USA	* Civil Docket No.
	* 2:07-CV-341
vs.	* Marshall, Texas
	*
	* April 6, 2011
CISCO SYSTEMS, INC., ET AL	* 1:15 P.M.
	*

TRANSCRIPT OF JURY TRIAL
BEFORE THE HONORABLE
CHAD EVERINGHAM
UNITED STATES MAGISTRATE JUDGE

APPEARANCES:

FOR THE PLAINTIFFS:

MR. MARK S. WERBNER
MR. RICHARD A. SAYLES
MR. MARK D. STRACHAN
Sayles Werbner
1201 Elm Street
4400 Renaissance Tower
Dallas, TX 75270

FOR THE DEFENDANTS:

MR. HENRY B. GUTMAN
MR. JEFFREY E. OSTROW
(CISCO) MR. HARRISON J. FRAHN, IV
MR. JONATHAN SANDERS
Simpson Thacher & Bartlett
2550 Hanover St.
Palo Alto, CA 94304

APPEARANCES CONTINUED ON NEXT PAGE:

COURT REPORTERS:

MS. SUSAN SIMMONS, CSR
MS. SHELLY HOLMES, CSR
Official Court Reporters
100 East Houston, Suite 125
Marshall, TX 75670
903/935-3868

(Proceedings recorded by mechanical stenography, transcript produced on CAT system.)

2

FOR THE DEFENDANTS:

MR. OTIS CARROLL
(CISCO) Ireland Carroll & Kelley
6101 South Broadway
Suite 500
Tyler, TX 75703
MR. MICHAEL E. JONES
Potter Minton
110 North College
Suite 500
Tyler, TX 75702

* * * * * *

PROCEEDINGS

LAW CLERK: All rise.

(Jury in.)

THE COURT: Please be seated. I believe we were ready to hear a video excerpt from Mr. Calhoun. If you'll turn the lights down.

MR. WERBNER: Before we do that, Your Honor, we decided that since the other reading for Mr. Calhoun, we would just go to our last witness and not present that.

THE COURT: Okay.

MR. WERBNER: I told counsel. We will call at this time as our witness Mr. Yuval Dovev by video deposition.

THE COURT: Okay.

3

(Video played.)

QUESTION: So you were the CEO of Commil -- and when I say Commil, I mean the Israeli entity. You were the CEO of Commil in 2004 and 2005, correct?

ANSWER: True.

(Video paused.)

MR. WERBNER: I just wanted to say that this was a telephone deposition, Your Honor, and that's why the sound -- the questioner is in the United States; the witness is in Israel.

(Video continued.)

QUESTION: In the same late 2004 timeframe that you were discussing earlier, did you ever approach Cisco?

ANSWER: Yes.

QUESTION: Why did you approach Cisco?

ANSWER: I wanted to engage them in a discussion about potentially acquiring –

QUESTION: Was that for --

ANSWER: -- Commil.

QUESTION: Any other reasons?

ANSWER: Not to my recollection, no.

QUESTION: Who did you speak with at Cisco, if you recall any of their names?

ANSWER: I spoke to a guy called Yoav something, who was their manager in Israel at that time. I forget his last name. Yoav -- I don't remember. And there was another guy, a more junior guy. I mean, I think Yoav was in charge of their M & A activities in Israel.

Yoav Leshem? Could that be him? I'm not sure. And -- and as far as I remember, the discussion was pretty short.

QUESTION: When did you talk to him?

ANSWER: Sorry?

QUESTION: First of all, can you spell Yoav's name to the extent that you recall it?

ANSWER: I think it's Yoav Leshem,

Y-O-A-V, L-E-S-H-A-M.

QUESTION: And when did you speak with Mr. Leshem?

ANSWER: Alleged Mr. Leshem -- I think --

QUESTION: Approximately?

ANSWER: I think Yoav --

QUESTION: Yoav. I'll just say that.

ANSWER: I think his first name is Yoav for sure, but his last name I'm not sure about.

When did I speak to him? Around -- around about that sort of timeframe. I don't remember

exactly when.

QUESTION: About how many times did you talk to him?

ANSWER: Not more than three. Once, twice, or three times.

QUESTION: And what did you talk about with Yoav, just generally?

ANSWER: Hey, we are Commil. We're doing something. I -- again, I'm -- I'm not speaking I'm -- I'm kind of generally assuming that this is what I said, because it has been a while ago.

But I introduced Commil. I remember we had a phone conversation, so it wasn't like -- maybe a short e-mail. I don't remember how it was. But I introduced Commil. I said, is there a point for us to enter any sort of discussion? Is Commil interesting for you?

And -- and I think the discussion was very -- as far as I remember, it was very brief. He said he will get back to me. I called him again after some time. And then he said, no, we don't see any – we

don't have any interest. And that -- that -- that was the extent of my relationship with him.

QUESTION: You were inquiring whether Yoav had an interest in acquiring Commil?

6

ANSWER: I don't remember if I said it so explicitly, but I -- yes, that was -- that was my intent anyway.

QUESTION: Beyond what you've described, do you recall any other specific things that you discussed with Yoav?

ANSWER: I think I described to him Commil's solution and Commil's core technology, including its patents, very briefly, so without going in too much details.

QUESTION: Do you remember that specifically?

ANSWER: I -- I remember that was --

QUESTION: Or are you -- or are you just --

ANSWER: No, no, no. I --

QUESTION: -- assuming what you might have talked about?

ANSWER: I'm -- I'm -- I'm digging deep to try and kind of dig things out of my long-term memory.

But I -- I -- I remember that we thought that -- that we could be interesting for Cisco, because we had what -- what we believed to be the core technology and the underlying technology of what they're using after their Airespace acquisition.

7

But that's probably the extent of my memory there on -- on these discussions. Again --

QUESTION: Okay. I was just asking: What was the technology that Cisco was practicing after the Airespace acquisition?

ANSWER: We believed that Airespace wireless switch technology is -- how shall I put it simply -- way too close for comfort for Commil's patents.

QUESTION: And what was that based on?

ANSWER: Our technological analysis of how things can be done and -- and about the -- and -- and -- so in two things:

A, on the architecture that they published off the Airespace system and of our anal -- our analysis that we -- our -- I mean, I'm not very technical, but my technology people basically told me, we don't see any other way that it could be done, other than the way that we described in our patents.

QUESTION: Other than what you've described so far, was there any other reason that you

thought that Cisco's technology might be too close for comfort for Commil's patents?

ANSWER: You're speaking generally about Cisco or about Airespace?

8

QUESTION: First, let me ask you about Cisco as it was implementing Airespace's technology after the acquisition.

ANSWER: Other than what I described internally, no. This is -- this is the analysis that we done at that time.

QUESTION: Did you ever tell Yoav that you believed Cisco might be infringing any Commil patents?

ANSWER: I -- I -- I remember telling him that we had the patent that we think line the core of the Airespace system. I didn't think it was as blunt as you describe it.

QUESTION: Tell me anything you recall specifically about what you told Yoav about the patents.

ANSWER: That goes down to what I – what I told you. I mean, that we have a mobility system – I mean, again, I don't remember the exact words. That we have a wireless mobility system and that we have patents for the wireless switch and wireless mobility between access points.

But I don't -- I don't remember more than that. But that was the general gist of the discussion.

QUESTION: Why do you say that you assume you would have sent him some documents?

9

ANSWER: Because normally, every company that I spoke to in that particular context, I had a -- a -- normally, a discussion of that sort ends: Okay, send me some materials. Let me see and talk to my friends and see.

And then I had this presentation that I sent, just a pretty generic kind of describing the things that I was talking about.

QUESTION: Just generally, what – what did that presentation say?

ANSWER: Commil's assets, where we are at, what our patent's about, what is our technology about, what is the status of our commercial relationship. Like a small prospectus, if you wish. I think -- I think --

QUESTION: Do you still have that presentation?

ANSWER: No. No. But I think you do.

QUESTION: I'm sorry. I didn't mean to interrupt you.

ANSWER: No, it's okay. I -- I -- I think it was

QUESTION: Oh, we do?

ANSWER: Yeah, I think -- I think you do. I think it was -- I think it was the presentation I was

10

shown by your colleague at the last deposition.

QUESTION: Do you remember if that generic presentation had any discussion of Commil's patents?

ANSWER: It had an -- a top-level description of how our patent worked, and it had a -- and it had references to the patent numbers and to the major claims.

QUESTION: Do you remember anything further about what it said about the patents?

ANSWER: No. It said the patent number, the major claims, and there was like a diagram kind of -- of our system that -- that related more to the implementation of the patents. The patents themselves were just mentioned in -- in Word format saying, okay, we have U.S. Patent No. Whatever, and then the three main claims or four of that patent.

(End of video clip.)

MR. WERBNER: Pass the witness, Your Honor.

MR. SANDERS: And, Your Honor, we, again, have a couple of brief clips of Mr. Dovev.

THE COURT: Okay.

(Video played.)

QUESTION: Other than what we've talked

11

about, did you ever have any other discussions with -- with Cisco?

ANSWER: Relating to Commil?

QUESTION: Yes.

ANSWER: Personally, no.

QUESTION: Did the company have any other discussions with Cisco?

ANSWER: Not that I remember during -- during the time that I used to work for Commil.

QUESTION: Do you remember the names of anyone else that Commil spoke with at Cisco at any time?

ANSWER: No.

QUESTION: Do you remember any documents specifically that Commil sent to Cisco at any time?

ANSWER: No. I mean, I'm saying -- I'm not saying there weren't documents. I'm just saying that I don't remember me sending any other documents to Cisco.

QUESTION: Do you remember anyone else sending any documents from Commil to Cisco?

ANSWER: No.

QUESTION: Do you have any records today of any communications you had with -- with Yoav or anyone else at Cisco?

ANSWER: No.

12

(End of video clip.)

THE COURT: Does that complete the offer?

MR. SANDERS: It does. Thank you, Your Honor.

THE COURT: Okay. Thank you.

All right. Who will be your next witness?

MR. SAYLES: May it please the Court. At this time, our next offer of proof will be to present to the

jury some stipulations of the parties. And before I read those, I would like to approach the bench just briefly.

THE COURT: Okay.

(Bench conference.)

MR. SAYLES: I myself want to be very careful not to open the door regarding validity. I would like things to stay where they are. But based on some of the statements in opening statement, I was thinking that I would read Stipulations 3 through 6 from the pretrial order. And I am going to read 7 through 9.

MR. OSTROW: Yeah. The 7 through 9, I have no problem with. I think the 3 through 6 are evident on the face of Exhibit 1, I believe, Your Honor. I don't see any reason to read it.

MR. SAYLES: May I speak?

THE COURT: Just a minute.

MR. SAYLES: Okay.

THE COURT: They are evident on the face of the patent. They've also been stipulated to, and reading those to the jury would not open the door for any validity issue.

MR. SAYLES: All right. And there's one that's not on the face, and that's the date of publication

which Mr. Gutman suggested was the date of issuance. That is incorrect, according to the stipulation. So that would also be something that I would read.

So are you saying that I could read them without opening the door?

THE COURT: Yes. No. 6 has got a publication date. That's fine.

(Bench conference concluded.)

THE COURT: Ladies and Gentlemen, before Mr. Sayles begins reading the parties' stipulation to you, recall the preliminary instructions that I gave you concerning what constitutes evidence in the case. And one of the things that constitutes evidence in the case that you-all may consider are the stipulations of the parties.

Stipulations occur when the lawyers for

IN THE UNITED STATES DISTRICT COURT
FOR THE EASTERN DISTRICT OF TEXAS
MARSHALL DIVISION

COMMIL USA	* Civil Docket No.
	* 2:07-CV-341
vs.	* Marshall, Texas
	*
	* April 8, 2011
CISCO SYSTEMS, INC., ET AL	* 12:45 P.M.
	*

TRANSCRIPT OF JURY TRIAL
BEFORE THE HONORABLE
CHAD EVERINGHAM
UNITED STATES MAGISTRATE JUDGE

APPEARANCES:

FOR THE PLAINTIFFS:

MR. MARK S. WERBNER
MR. RICHARD A. SAYLES
MR. MARK D. STRACHAN
Sayles Werbner
1201 Elm Street
4400 Renaissance Tower
Dallas, TX 75270

FOR THE DEFENDANTS:

MR. HENRY B. GUTMAN
MR. JEFFREY E. OSTROW
(CISCO) MR. HARRISON J. FRAHN, IV
MR. JONATHAN SANDERS
Simpson Thacher & Bartlett
2550 Hanover St.
Palo Alto, CA 94304

APPEARANCES CONTINUED ON NEXT PAGE:

COURT REPORTERS:

MS. SUSAN SIMMONS, CSR
MS. SHELLY HOLMES, CSR
Official Court Reporters
100 East Houston, Suite 125
Marshall, TX 75670
903/935-3868

(Proceedings recorded by mechanical stenography, transcript produced on CAT system.)

2

FOR THE DEFENDANTS:

MR. OTIS CARROLL
(CISCO) Ireland Carroll & Kelley
6101 South Broadway
Suite 500
Tyler, TX 75703
MR. MICHAEL E. JONES
Potter Minton
110 North College
Suite 500
Tyler, TX 75702

* * * * * *

PROCEEDINGS

LAW CLERK: All rise.

(Jury in.)

THE COURT: Please be seated.

All right. Mr. Frahn, the first thing I want to take is y'all's proffer.

MR. FRAHN: Yes, Your Honor.

THE COURT: All right.

MR. FRAHN: So pursuant to Federal Rule of Evidence 103, we'd like to make a proffer of a summary of the substance of the evidence that we would have put on in support of Cisco's good-faith belief and objectively reasonable basis for believing that the 24 patent-in-suit is valid -- is invalid, is invalid.

Excuse me, Your Honor. I misspoke.

3

I have actually -- to avoid problems like that and also to avoid a lot of boredom, I actually have a written version of the proffer, which I had provided to Mr. Strachan just a moment ago, and I would propose, process-wise, that we simply hand this in

and have it be marked as an exhibit and then proceed from there so that it is part of the record.

THE COURT: Objections?

MR. STRACHAN: No objection, Your Honor.

THE COURT: All right. It will be received as -- I believe it's Court's 2. It will be Court's whatever number is next.

All right. What's the next item of business?

MR. FRAHN: The next item of business, I believe, would be JMOLs.

THE COURT: That's --

MR. FRAHN: All right. And so for – let me grab my binder.

Cisco, pursuant to Rule 50(a) --

THE COURT: Hold on just a second. Ms. Carroll?

MS. CARROLL: Yes.

THE COURT: Would you help me pull that door to? Thank you.

4

All right. Go ahead.

MR. FRAHN: Thank you, Your Honor.

So pursuant to Rule 50(a), Cisco has two motions for judgment as a matter of law.

First is the lack of infringement by any customer demonstrates that there is no induced infringement by Cisco for the reasons that were explained at length by Mr. Gutman yesterday, and that will be further explained and set forth in a written motion to follow.

You know, under the Mirror Worlds case, you have to infringe a method claim by practicing – one person practicing all the steps. Under all the Federal Circuit cases on Joy Tech and Finjan, every single one of those steps has to be performed by the same person. There has been no evidence that any single person performs all of the steps that are claimed in Claim 1 of the Commil '395 patent, and, therefore, for that person -- for that reason, none of the customers infringe, and there can't be a case on inducement.

THE COURT: Okay.

MR. FRAHN: And we have a separate motion on the damages issue, and just very shortly, Your Honor, again, at the close of all the evidence, there are license agreements that Commil has relied upon,

5

subject -- which don't pass muster under ResQNet, don't mass muster under Uniloc, and the damage

theory is legally deficient as a matter of law, and the case ought to be dismissed on that point.

THE COURT: Okay.

MR. FRAHN: Okay.

THE COURT: I'm going to carry those motions.

MR. FRAHN: Thank you, Your Honor.

THE COURT: Now, do you have additional motions?

MR. PAYNE: We have a JMOL motion as well that was filed a few minutes ago.

THE COURT: Okay.

MR. PAYNE: Your Honor, we've moved for judgment as a matter of law on the question of inducement, and there's four components to our motion. Direct infringement is the first, and then the three components of inducement: Knowledge, the specific intent to cause the acts at issue, and the knew or should have known standard.

With the respect to direct infringement, the evidence is as follows: Mr. McAlexander has testified that he looked carefully at the Cisco literature, the marking documents, the technical

HIGHLY CONFIDENTIAL

air space

Changing the Game for WLANs: Airespace's Breakthrough "Split MAC" Architecture

The Airespace Wireless Enterprise Platform was designed to apply techniques commonly emp[illegible]ed in large wireless networks (e.g., cellular) to 802.11 environments. A key design and deployment principle used in carrier wireless networks is the centralization of monitoring, control, and provisioning functions. Centralization has been proven lime and time again as the best way to easily create and enforce unified policies across a large number of network devices located in the same location or across disparate geographic regions.

For a centralized WLAN architecture to be effective, "fresh" information must be constantly fed to the centralized devices that manage the network (i.e. WLAN switches or appliances). The centralized switch / appliance cannot make accurate decisions without accurate, up-to-date information pertaining to the state of the wireless environment at every access point in the network. At the same time, a centralized controller can adversely affect performance if it is involved in *all* operations associated with traffic delivery at the access point. As a result, a balance is required.

Airespace solved the centralized architecture dichotomy by creating a new design for 802.11 service delivery, called "Split MAC." This patent-pending architecture has revolutionized enterprise wireless networking by splitting the processing of the 802.11 protocol between two devices, the Access Point and a centralized WLAN switch or appliance. By innovating on the way that WLAN systems handle 802.11 packets, Airespace has created the perfect platfon11 upon which enterprises can deliver business critical wireless services.

Building an Enterprise-Grade WLAN

Traditional WLANs were created by deploying numerous standalone Access Points that created separate, autonomous RF domains. This is very similar to the original cellular networks, where standalone towers managed their own domains. In standalone 802.11 networks, all MAC processing is performed in the *AP* itself. For example, the AP:

- terminates both the 802.11 data and management protocols
- translates data between the wired and wireless portions of the network
- maintains statistical information regarding wireless clients and the radio environment.
-

Maintaining information with in individual wireless nodes makes it very difficult to create a unified wireless network that delivers consistent performance on a per user basis, that provides high performance roaming, and ensures that policies are

consistent regardless of a user's location. Finally, managing every access point as a separate RF domain is difficult for an IT staff, especially as the size of the wireless network continues to grow.

Centralized WLAN architectures address the above deficiencies by centralizing system wide intelligence into a single switch/appliance or multiple switches/appliances acting in concert. However, most solutions centralize all functionality within the centralized device; meaning traffic forwarding, encryption, and QoS, in addition to policy creation and management all take place within the switch or appliance. In these architectures, the AP is merely a radio antenna with no role in 802.11 or other packet processing. The concern with this architecture, as stated above, is how well it deal s with real-time applications when all traffic handling decisions must be made at the core.

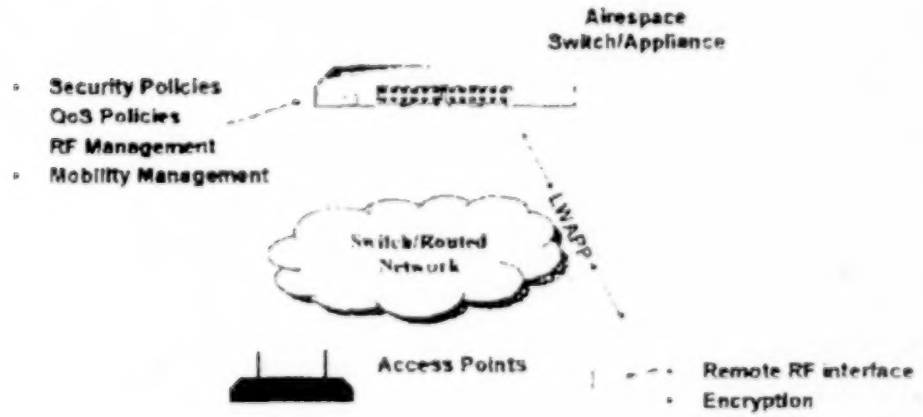

Note: In the Airespace architecture, the WLAN controller also handles a variety of non-MAC related functions that are required for system-wide functionally, such as layer 3 encryption. As the

purpose of this paper is to explain the specific capabilities of the split-MAC architecture, they are not directly addressed here.

The Airespace Wireless Enterprise Plat form tackles this problem head-on by splitting the processing of the 802.11 data and management protocols, as well as the access point functionality, between the AP and the WLAN switch or controller. The AP handles the portions of the protocol that have real-time requirements, which includes:

MAC function inside of AP	Why Airespace kept it there
The atomic frame exchange handshake between a client and AP when transferring a frame over the air	This is a time sensitive handshake on a per frame basis Keeping this local to the access point improves transmission rates for clients

The transmission of Beacon frames	It is more efficient to have the access point generate beacons rather than the switch / appliance.
The buffering and transmission of frames for clients in power save operation	Reduces power consumption needs of the client.
The response to Probe Request frames from clients	This is a very time sensitive operation. Although the access point responds to probe requests, it relies on the security and encryption policy specified by the network administrator.
Forwarding notification of received Probe Requests to the switch or controller	This allows a client to associate with an access point, but all of the information regarding client probes is forwarded up to the switch / appliance. This provides security and allows the system to load balance users.
Providing real-time signal quality information to the switch or controller with every received frame	This allows the switch / appliance to make any RF changes (i.e. channel / power) and load balance users.
Monitoring each of the radio channels for noise, interference, and other WLANs	Since the switch / appliance cannot physically be where the access point is located, the access point monitors the air and reports the conditions of the environment of the access point up to the switch / appliance in real time.
Monitoring for the presence of other APs.	This is done for two reasons. First, LWAPP enabled access points need to be able to form adjacencies with one another. Second, this is the first step in identifying rogue access points on the network.
Layer 2 Encryption	By keeping layer 2 encryption in the access point, the access point can make on the fly changes to QoS.

All other functionality is handled in the WLAN switch/appliance, whereby time-sensitivity is not a concern and system-wide visibility is required. Some of the MAC-layer functions provided in the WLAN controller include:

1. 802.11 authentication
2. 802.11 association and re-association (mobility)
3. 802.11 frame translation and bridging.

Centralizing the 802.11 management protocol, frame translation, and bridging functions in the switch or

appliance allows for the collections of specific information required by the to manage on a system wide-basis: for example, network-wide RF information or seamless Layer and Layer client roaming.

Enterprises require a WLAN system, not a collection of disparate pieces of equipment. Airespace's architecture makes this possible, improvising all aspects of enterprise wireless networking, including management, performance, mobility, security, and application support.

Intelligent RF management

The "split MAC" architecture dramatically improves a WLAN system's ability to manage radio resources. By providing monitoring functions in the AP, changes in the RF can be detected in real-time (e.g., received signal strength, signal quality, channel assignments, noise, etc). This information is then fed to a centralized WLAN controller, which makes intelligent decisions for optimal WLAN performance. For example, a single Airespace WLAN switch or appliance can dynamically assign channels, allocate bandwidth, and control AP transmit power across an entire enterprise.

A "holistic" approach is required for RF management to be successful. If intelligence resides exclusively in the AP, RF management decisions on one device can actually have a deleterious effect on the WLAN as a whole. For example, reducing transmit power on one AP can cause coverage holes elsewhere. Similarly, increasing transmit power could cause interference.

In addition, only a system-wide approach can re-use channels to avoid noise and interference in one section of the network. If individual APs are making RF management decisions, problematic channels would be abandoned entirely when in some cases, using one of these channels might be beneficial to overall network performance. By creating a centralized "authority" for RF management, Airespace's split MAC architecture is solving real operational issues and doing so in real time.

Better WLAN Performance through Real-Time Load Balancing

Traditional WLANs typically handle mobility in one of two ways APs communicate load information with one another in a peer-to-peer fashion; the "best" AP is responsible for responding to client requests. Or, the APs broadcast load information directly to the clients who are responsible for making their own association decisions.
Both methods have significant drawbacks. The first adds additional traffic on the WLAN, which consumes bandwidth and can add latency If a lag is experienced when APs are sharing information, inaccurate load balancing decisions can be made or time-sensitive traffic can experience performance problems. In addition, this method makes decisions "in a vacuum", ignoring security, QoS, user mobility patterns, and other useful parameters that can make more accurate decisions on a system-wide basis.

The second method exacerbates many of the same issues, as clients typically operate on stale information and do not communicate with one

another to collect system-wide information. As hundreds, or even thousands, of client devices might be participating in a wireless LAN, this method presents significant management burdens and scalability challenges. Moreover, clients can be spoofed, causing the potential for a wireless attack such as Denial of Service.

Airespace's split-MAC architecture addresses these problems to provide effective, system-wide load balancing for optimal performance. It works as follows:

- Most clients send occasional send Probe *Requests* to identify if there are any nearby APs with a strong signal offering the proper service set. The APs that respond to the client provide information about the channel on which they are operating and the individual WLANs (e.g., SSIDs) that are available. The Airespace APs also send a notification to the WLAN switch or appliance, indicating the identity of the client sending the Probe Request and including information on the signal quality received. This information is used for security functions as well as client connectivity.

- The Airespace WLAN controller uses this information, along with similar information from other APs, to determine reliability that each AP is able to communicate with a given

client. Using this information, along with the knowledge of the number of clients currently associated with each AP and total load of each AP, the WLAN switch or appliance selects the best AP with which a particular client should communicate. Using existing methods in the 802.11 management protocol, the Airespace WLAN controller encourages the client to associate with the most appropriate AP.

Load balancing is optimized using the Split-Mac approach because centralized WLAN switches and appliances have detailed information about each AP's view of their environment, enabling the system to make fast, intelligent decisions. By enabling the APs themselves to handle Probe Requests, the Airespace network ensures that there is minimal time delay when balancing load, ensuring that mobile users experience real-time performance.

A Simple Design for Seamless Mobility

Straightforward network design is often a difficult goal to achieve with traditional APs. Unless all the APs are physically connected to the same subnet, clients will obtain an IP address that is valid on one subnet and roam to a part network that is connected to a completely different subnet. Connecting a single subnet to all the APs network is often an unacceptable solution. Running a single VLAN to every AP in a large WLAN reduces the efficiency of the routers in the network and can defeat one of the

reasons that routers are placed in a network to begin with, limiting the broadcast domain.

Since the Airespace system centralizes all 802.11 frame translation and bridging functions within the WLAN switch / appliance, roaming is simple and effective. With the Airespace system, traffic is tunneled between switches on different subnets to ensure that clients can maintain IP connectivity wherever they roam. No client software or upgrades to the routing infrastructure are required, as is the case with implementations that require MobileIP. The switch / appliance perform proxy ARP on behalf of clients in order to ensure that the existing layer infrastructure connects to the client using the switch.

The Airespace system goes a step beyond MobileIP in terms of functionality by ensuring that user context information is transferred across subnets. This ensures that security polices, QoS parameters, and other user-specific information is never lost when a client is on the move.

Security

Just as mobility is enhanced by splitting the processing of the protocols and AP functions between the AP and the WLAN switch or appliance, security is similarly enhanced. When every packet is processed by a centralized WLAN controller, sophisticated security policies can be applied, regardless of which AP a client is associated with. Security policies can include:

- Layer 2 encryption (e.g., WEP, WPA, 802.1 1i) or Layer 3 encryption (IPSEC).
- User authentication (e.g., 802. 1X, XAUTH, or Web Login).
- Detailed access control lists (ACLs), limiting network access to an individual user or groups of users.
- Dynamic VLAN assignments.

All of these security enhancements are possible because 802.11 functionality is split between the AP and a centralized WLAN switch or appliance. The split provides the switch / appliance and access point with the opportunity to examine and process every packet that arrives from or is destined to the WLAN and handle them accordingly. It also enables enterprises to identify security violations and at the edge of the network and stop them there. When a violation is detected, the WLAN switch or appliance provides protection across the entire network. For example, the AP where the packet arrived can be instructed to ignore the client until directed otherwise. In addition, the Airespace WLAN switch and appliance can tell every other AP in the WLAN to ignore Probe Requests from the client, ensuring that the device cannot access the wireless network from a different location.

RF topology information stored in the WLAN controller can be correlated with real-time information detected by APs to accurately locate the source of a security threat, such as a rogue AP. Granular location tracking like this helps to rapidly contain malicious activity before it can cause any harm.

If all security functions are handled in the AP, enterprises do not have the ability to create unified policies across all APs. In addition, it is difficult to establish multiple different security policies on each AP without centralized intelligence. If all security functions reside exclusively in the WLAN controller, it is difficult to enforce certain activities at the edge of the network, such as traffic encryption. As a result, creating a balance between the two is vital to overall WLAN security.

Real-Time Performance

In order to support real-time traffic, such as voice, on the downstream (coming from the wired network) a WLAN system must differentiate packets from one another and handle these packets according to specific rules. The classification of packets is best handled in a centralized WLAN controller, which can apply system-wide rules pertaining to Quality of Service (QoS) based upon numerous criteria, such as source, destination, protocol type, VLAN ID, DHCP, priority, or any combination of these characteristics. Once classified, the packets are given the appropriate priority, bandwidth commitments, and packet drop characteristics for optimal system-wide performance.

In the Airespace architecture, Access Points contain independent hardware queues that are used to prioritize the packets for transmission over the air. Access to the RF network is based upon the QoS parameters established by the WLAN switch/appliance. In this respect, IT staff can centrally monitor and configure QoS Policies and

have them enforced locally at the AP for optimal WLAN performance.

The Airespace architecture also paves the way for 802.1 le, the IEEE's emerging standard for QoS, by providing layer 2 encryption functionality in the AP. For one, this enables the AP to have visibility into each and every packet, enabling it to make intelligent resource scheduling decisions "on the fly." Secondly, when the AP handles encryption it can better support the "dynamic fragmentation" capabilities of the 802.1 le standard. This refers to each AP's ability to fragment packets when there is insufficient time available for an entire packet to be transmitted. If encryption is centralized in a WLAN controller, the WLAN system would experience enough delay to render the dynamic fragmentation feature ineffective. As a result, the Airespace solution is ideally suited for future 802.11 e environments.

Conclusion

By innovating the way that WLAN systems handle 802.11 traffic, Airespace makes WLAN deployment simple, seamless, and secure. The easiest way to understand Airespace's split MAC approach is to consider each access point a remote interface on a switch or appliance, but the remote interface can make some autonomous decisions. It takes a well-thought out architecture to build a business critical network. By strategically distributing key 802.11 functions between WLAN controllers and APS, Airespace has set the standard for enterprise-class wireless LANS.

Split 802.11 MAC processing

By Matt Glenn
Director of Product Management Airespace
E-mail: mglenn@airespace.com

WLANs provide productivity gains for enterprise networks and reduce the total cost of deploying and operating a network. But at the same time, wireless networks represent a management and security challenge for network managers. The key to deploying a wireless network is gaining control of the wireless domain in the same way that IT managers have control over their wireline networks.

While wireline networks rely on user authentication and physical access to the network to gain access, wireless networks require strong authentication and encryption. They also represent an operational challenge since the wireless domain is dynamic and constantly changing. These are the challenges that wireless carriers have had to overcome to deploy carrier-class wireless networks.

A key design and deployment principle used in wireless networks is the centralization of monitoring, control and provisioning functions. Centralization is key to easily create and enforce unified policies across a large number of network devices in the same location or across disparate geographic regions.

For a centralized WLAN architecture to be effective, relevant information must be constantly fed to the centralized devices that manage the

network (i.e. WLAN switches or appliances). The centralized switch/ appliance cannot make accurate decisions without holistic, accurate, up-to-the-millisecond information pertaining to the state of the wireless environment. At the same time, there are timing-critical functions a centralized controller may adversely affect if it is involved in all access point (AP) operations. As a result, a balance is required.

One solution for the centralized architecture dichotomy is an entirely new design for 802.11 service delivery that splits the processing of the 802.11 media access control (MAC) layer between two devices: the AP and a centralized WLAN switch or appliance.

Enterprise-grade WLAN

Traditional WLANs were created by deploying numerous, standalone APs that formed autonomous RF domains; each of these separate RF domains were managed individually. This is very similar to the original cellular networks, where standalone towers managed their own domains. In standalone 802.11 networks, all MAC processing is performed in the AP itself. For example, the AP:

- Terminates both the 802.11 data and management protocols (note that much of the management will likely come from the switch/appliance);

- Translates data between the wired and wireless portions of the network;

- Maintains statistical information regarding wireless clients and the radio environment.

Maintaining information within individual wireless nodes makes it difficult to create a unified wireless network that delivers consistent performance on a per-user basis, provides high performance roaming and ensures that policies are consistent, regardless of a user's location. Finally, managing every AP as a separate RF domain is difficult for an IT staff, especially as the size of the wireless network continues to grow.

Centralized WLAN architectures address the above deficiencies by centralizing system-wide intelligence into a single switch/appliance or multiple switches/appliances acting in concert. However, most solutions centralize all functionality within the centralized device; meaning traffic forwarding, encryption and quality-of-service (QoS), in addition to policy creation and management, all take place within the switch or appliance. In these architectures, the AP is merely a radio antenna with no role in 802.11 or other packet processing. The concern with this architecture, as stated above, is how well it deals with real-time applications when all traffic-handling decisions must be made at the core.

Split-MAC WLAN systems tackle this problem head-on by splitting the processing of the 802.11 data and management protocols, as well as the AP functionality, between the AP and the WLAN switch or controller (**Figure 1**). In the split-MAC approach, the AP handles the portions of the protocol that have real-time requirements (**Figure 2**).

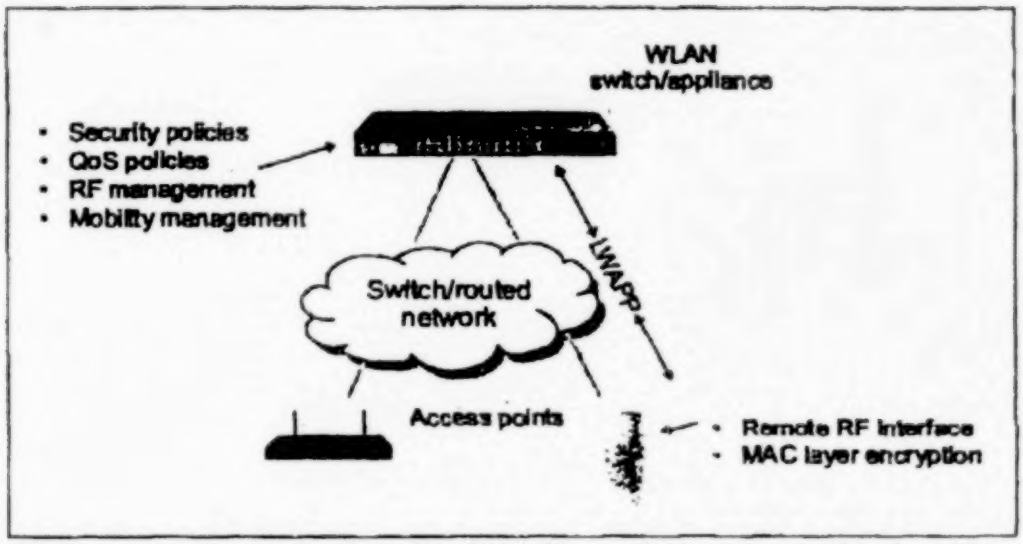

Figure 1: A typical split-MAC architecture that splits the processing of the 802.11 data and management protocols, as well as the AP functionality, between the AP and the WLAN switch or controller.

MAC function inside the AP	Reason
The atomic frame exchange handshake between a client and AP when transferring a frame over the air.	This is a time-sensitive handshake on a per-frame basis. Keeping this local to the AP improves transmission rates for clients.
The transmision of beacon frames.	It is more efficient to have the AP generate beacons rather than the switch/appliance.
The buffering and transmission of frames for clients in power save operation.	Reduce power consumption needs of the client.
The response to probe request frames from clients.	This is a very time-sensitive operation. Although the AP responds

	to probe requests, it relies on the security and encryption policy specified by the network administrator.
Forwarding notification of received probe requests to the switch or controller.	This allows a client to associate with an AP, but all of the information regarding client probes is forwarded up to the switch/appliance. This provides security and allows the system to load balance users.
Providing real-time signal quality information to the switch or controller with every received frame.	This allows the switch/ appliance to make any RF changes (i.e. channel/ power) and load balance users.
Monitoring each of the radio channels for noise, interference and other WLANs.	Since the switch/appliance cannot physically be where the AP is located, the AP monitors the air and reports the conditions of the environment of the AP up to the switch/ appliance in real-time.
Monitoring for the presence of other APs.	This helps avoid interference and improve coverage area, plus it is the first step in identifying rogue APs.
L2 encryption	By keeping L2 encryption in the AP, QoS decisions can be

	made on-the-fly, as dictated by the 802.11e protocol.

Figure 2: The AP handles portions of the protocol that have real-time requirements in the split-MAC approach.

All other functionality is handled in the WLAN switch/ appliance, where time-sensitivity is not a concern and system-wide visibility is required. Some of the MAC-layer functions provided in the WLAN controller include 802.11 authentication, 802.11 association and re-association (mobility), 802.11 frame translation and bridging.

Centralizing the 802.11 management protocol, frame translation and bridging functions in the switch or appliance allows for the collection of specific information required by the controller to manage on a system-wide basis (e.g. network-wide RF information or seamless L2 and L3 client roaming).

Intelligent RF management

The split MAC architecture improves a WLAN system's ability to manage radio resources. By providing monitoring functions in the AP, changes in the RF can be detected in real-time (e.g. received signal strength, signal quality, channel assignments, noise). This information is then fed to a centralized WLAN controller, which makes intelligent decisions for optimal WLAN performance. For example, a single WLAN switch or appliance can dynamically assign channels, allocate bandwidth and control AP transmit power across an entire enterprise.

A "holistic" approach is required for RF management to be successful. If intelligence resides exclusively in the AP, RF management decisions on one device can have a deleterious effect on the WLAN as a whole. For example, reducing transmit power on one AP can cause coverage holes elsewhere. Similarly, increasing transmit power could cause interference.

In addition, only a system-wide approach can reuse channels to avoid noise and interference in one section of the network. If individual APs are making RF management decisions, problematic channels would be abandoned entirely when, in some cases, using one of these channels might be beneficial to overall network performance. By creating a centralized "authority" for RF management, split-MAC architecture solves real operational issues in real-time.

Real-time load balancing

Traditional WLANs typically handle mobility in one of two ways:

1 APs communicate load information with one another in a peer-to-peer fashion and the "best" AP is responsible for responding to client requests.

2 The APs broadcast load information directly to the clients who are responsible for making their own association decisions.

Both methods have significant drawbacks. The first causes additional traffic on the WLAN,

which consumes bandwidth and can add latency. If a lag is experienced when APs are sharing information, inaccurate load balancing decisions can be made or time-sensitive traffic can experience performance problems. In addition, this method makes decisions "in a vacuum," ignoring security, QoS, user mobility patterns and other useful parameters that can make more accurate decisions on a system-wide basis.

The second method exacerbates many of the same issues, as clients typically operate on stale information and do not communicate with one another to collect system-wide information. As hundreds or even thousands of client devices might be participating in a WLAN, this method presents significant management burdens and scalability challenges. Moreover, clients can be spoofed, causing the potential for a wireless attack such as denial-of-service.

The proposed split-MAC architecture addresses these problems to provide effective, system-wide load balancing for optimal performance. It works as follows:

- Most clients send occasional probe requests to identify if there are any nearby APs with a strong signal offering the proper service set. The APs that respond to the client provide information about the channel on which they are operating and the individual WLANs (e.g. service set identifications) that are available. The APs also send a notification to the WLAN switch or appliance, indicating the identity of the client sending the probe request and

including information on the signal quality received. This information is used for security functions and client connectivity.

- The WLAN controller uses this information, along with similar information from other APs, to determine reliability that each AP is able to communicate with a given client. Using this information, along with the knowledge of the number of clients associated with each AP and total load of each AP, the WLAN switch or appliance selects the best AP with which a particular client should communicate. Using existing methods in the 802.11 management protocol, the WLAN controller encourages the client to associate with the most appropriate AP.

Load balancing is optimized using the split-MAC approach because centralized WLAN switches and appliances have detailed information about each AP's view of its environment, enabling the system to make fast, intelligent decisions. By enabling the APs themselves to handle probe requests, the WLAN system ensures that there is minimal time delay when balancing load, ensuring that mobile users experience real-time performance.

Traffic handling

To support real-time traffic, such as voice, on the downstream (coming from the wired network), a WLAN system must differentiate packets from one another and handle these packets according to specific rules. The classification of packets is best handled in a centralized WLAN controller, which can

apply system-wide rules pertaining to QoS based on criteria such as source, destination, protocol type, VLAN ID, DHCP, priority or any combination of these characteristics. Once classified, the packets are given the appropriate priority, bandwidth commitments and packet-drop characteristics for optimal system-wide performance.

In the split-MAC architecture, APs contain independent hardware queues that prioritize the packets for transmission over the air. Access to the RF network is based upon the QoS parameters established by the WLAN switch/appliance. In this respect, IT staff can centrally monitor and configure QoS policies and have them enforced locally at the AP for optimal WLAN performance.

The split-MAC architecture also paves the way for 802.11e, the IEEE's emerging standard for QoS, by providing L2 encryption functionality in the AP This enables the AP to have visibility into each and every packet, allowing it to make intelligent resource scheduling decisions on-the-fly.

Secondly, when the AP handles encryption, it can better support the dynamic fragmentation capabilities of the 802.11e standard. This refers to each AP's ability to fragment packets when there is insufficient time available for an entire packet to be transmitted. If encryption is centralized in a WLAN controller, the WLAN system would experience enough delay to render the dynamic fragmentation feature ineffective. As a result, the split-MAC architecture is ideally suited for future 802.11e environments.

Security

Just as mobility is enhanced by splitting the processing of the protocols and AP functions between the AP and the WLAN switch or appliance, security is similarly enhanced. When every packet is processed by a centralized WLAN controller, sophisticated security policies can be applied, regardless of which AP a client is associated with. Security policies can include:

- L2 encryption (WEP, WPA, 802.11i) or L3 encryption (IPSec);
- User authentication (802.1x, XAUTH or Web login);
- Detailed access control lists, limiting network access to an individual user or groups of users;
- Dynamic virtual LAN assignments.

All of these security enhancements are possible because 802.11 functionality is split between the AP and a centralized WLAN switch/ appliance. The split provides the switch/appliance and AP with the opportunity to examine and process every packet that arrives from or is destined to the WLAN and handle them accordingly. It also enables enterprises to identify and stop security violations at the edge of the network.

When a violation is detected, the WLAN switch/appliance provides protection across the entire network. For example, the AP where the packet arrived can be instructed to ignore the client until directed otherwise. In addition, the WLAN

switch and appliance can tell every other AP in the WLAN to ignore probe requests from the client, ensuring that the device cannot access the wireless network from a different location.

RF topology information stored in the WLAN controller can also be correlated with real-time information detected by APs to accurately locate the source of a security threat, such as a rogue AP (**Figure** 3). Granular location tracking like this helps to rapidly contain malicious activity before it can cause any harm.

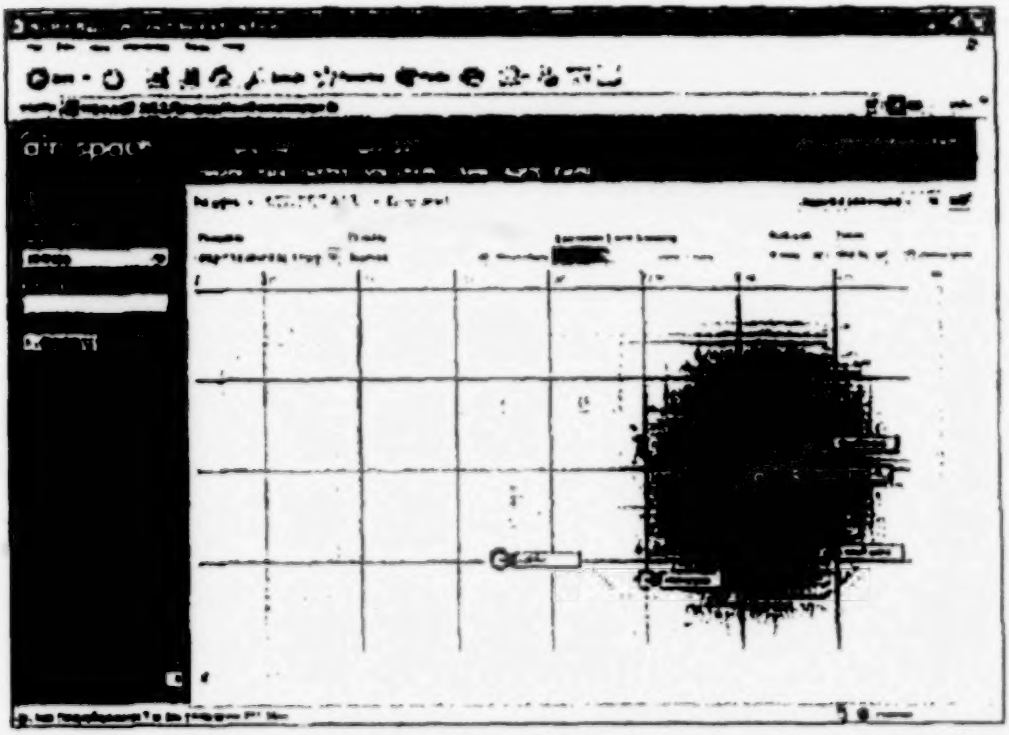

Figure 3: The split-MAC architecture makes it easier to detect and protect against rogue APs in a WLAN network.

If all security functions are handled in the AP, enterprises do not have the ability to create unified policies across all APs. In addition, it is difficult to establish multiple security policies on each AP

without centralized intelligence. If all security functions reside exclusively in the WLAN controller, it is difficult to enforce certain activities at the edge of the network, such as traffic encryption. As a result, creating a balance between the two is vital to overall WLAN security.

By innovating the way systems handle 802.11 traffic, WLAN systems that leverage a split-MAC architecture make WLAN deployment simpler, more seamless and secure. By strategically distributing key 802.11 functions between WLAN controllers and APs, the split-MAC architecture sets the standard for enterprise-class WLANs.

[Communication Systems Design]

Conclusion

4. The prior art made of record and not relied upon is considered pertinent to applicant's disclosure. Du (US Pat# 6,622,022), Nakahara (US Pat# 5,473,668), Toda (US Pat# 5,448,570), Struhsaker (US Pat# 6,804,527), Grilli (US Pat# 6,438,117), Arazi (US Pat# 6,430,395), Heineck (US Pat# 5,519,759), and Itri (US Pat# 5,864,592).

Any inquiry concerning this communication or earlier communications from the examiner should be directed to Owen J Frazier whose telephone number is (703) 305-0548. The examiner can normally be reached on Monday-Friday 7:30-5:00.

If attempts to reach the examiner by telephone are unsuccessful, the examiners supervisor, Lester Kincaid can be reached on (703) 306-3016. The fax phone number for the organization where this application or proceeding is assigned is 703-872-9306.

Information regarding the status of an application may be obtained from the Patent Application Information Retrieval (PAIR) system. Status information for published applications may be obtained from either Private PAIR or Public PAIR. Status information for unpublished applications is available through Private PAIR only. For more information about the PAIR system, see http://pair-direct.uspto.gov. Should you have

questions on access to the Private PAIR system, contact the Electronic Business Center (EBC) at 866-217-9197 (toll-free).

/s/
12/13/07
LESTER G. KINCAID
PRIMARY EXAMINER

Notice of References Cited

Application/Control No.
09/982,591

Applicant(s)/Patent Under Reexamination
DERGUN ET AL.

Examiner	Art Unit
Owen J Frazier	2687

U.S. Patent Documents

	Document Number County Code-Number-Kind Code	Date MM-YYYY	Name	Classification
A	US-6,480,483 B2	11-2002	Yahata et al.	370/350
B	US-6,622,022 B1	09-2003	Du, Yongganng	455/502
C	US-5,473,668	12-1995	Nakahara, Toru	455/465
D	US-5,448,570 A	09-1995	Toda et al.	370/337
E	US-6,430,395	08-2002	Arazi et al.	455/41.2
F	US-6,804,527	10-2004	Struhsaker et al.	455/502
G	US-6,438,117 B1	08-2002	Grilli et al.	370/331
H	US-5,519,759 A	05-1996	Heineck et al.	455/422.1

I	US-5,864,592 A	01-1999	Itri, Benedict A.	375/375

S35	2	("6430395").PN.	US-PGPUB; USPAT; EPO; JPO; DERWENT; IBM_TDB	OR	OFF	2004/11/23 13:58
S36	270	yahata.uref	US-PGPUB; USPAT; EPO; JPO; DERWENT; IBM_TDB	OR	OFF	2004/11/29 10:17
S37	60	S36 and synchroniz$	US-PGPUB; USPAT; EPO; JPO; DERWENT; IBM_TDB	OR	OFF	2004/11/29 13:01
S38	463	sayers.uref.	US-PGPUB; USPAT; EPO; JPO; DERWENT;OFF IBM_TDB	OR	OFF	2004/11/29 10:18
S39	10	S38 and synchroniz$	US-PGPUB; USPAT; EPO; JPO; DERWENT; IBM_TDB	OR	OFF	2004/11/29 10:19
S40	270	yahata.uref	US-PGPUB; USPAT; EPO; JPO; DERWENT; IBM_TDB	OR	OFF	2004/11/29 13:02
S42	1	"6,480,483".uref.	US-PGPUB; USPAT; EPO; JPO; DERWENT; IBM_TDB	OR	OFF	2004/11/30 10:08
S43	7	"6,542,754".uref	US-PGPUB; USPAT; EPO; JPO; DERWENT; IBM_TDB	OR	OFF	2004/11/30 10:09
S50	6	reset adj2	US-PGPUB;	OR	OFF	2004/

	0	clock adj2 divider$	USPAT; EPO; JPO; DERWENT; IBM_TDB			12/01 08:56
S51	0	S50 and 455/502,524.c cls.	US-PGPUB; USPAT; EPO; JPO; DERWENT; IBM_TDB	OR	OFF	2004/ 12/01 08:55

United States Patent **Dergun, et al.**

Patent No.: US 6,975,877 B1
Date of Patent: Dec. 13, 2005

(54) SYSTEM AND METHOD FOR SYNCHRONIZING CLOCK DIVIDERS IN A WIRELESS NETWORK

(75) Inventors:
Alex Dergun, San Francisco, CA (US);
Ian Sayers, Redwood City, CA (US)

(73) Assignee:
Cisco Technology, Inc., San Jose, CA (US)

(*) Notice:
Subject to any disclaimer, the term of this patent is extended or adjusted under 36 U.S.C. 154(b) by 777 days.

(21) Appl. No.: **09/982,591**

(22) Filed: **Oct. 17, 2001**

(51) **Int. Cl.**[7] **H04B 15/00**
(52) **U.S. Cl.** **455/502**; 455/502; 455/524; 370/328; 370/350; 370/503; 375/356

(58) **Field of Search** 455/911, 502, 524, 455/433; 370/350, 328, 503-520; 375/354-376 713/400-401

(56) **References Cited**

U.S. PATENT DOCUMENTS

5,448,570 A * 9/1995 Toda et al. 370/337
5,473-668 A * 12/1995 Nakahara 455/465
5,519,759 A * 5/1996 Heineck et al. 455/422.1
5,613,211 A 3/1997 Matsuno
5,784,368 A 7/1998 Weigand et al.
5,864,592 A * 1/1999 Itri 375/375
6,014,376 A 1/2000 Abreu et al.
6,112,100 A 8/2000 Ossoinig et al. 455/502
6,308,078 B1 10/2001 Van De Water 455/503
6,430,395 B2 * 8/2002 Arazi et al. 455/41.2
6,438,117 B1 * 8/2002 Grilli et al. 370/331
6,477,385 B1 11/2002 Hara 455/502
6,480,483 B2* 11/2002 Yahhata et al. 370/350
6,532,226 B1 3/2003 Lehtinen et al. 370/347
6,622,022 B1 * 9/2003 Du 455/502
6,804,527 B2 * 10/2004 Struhsaker et a. 455/502

FOREIGN PATENT DOCUMENTS

EP	0732 817 A2	9/1996
EP	0732817 A3	9/1996
EP	0 904 873 A1	3/1999
FR	2 744 864	8/1997
WO	WO 94/18764	8/1994

* cited by examiner

Primary Examiner–Lester G. Kincaid
Assistant Examiner–Owen Frazier
(74) *Attorney, Agent, or Firm*–Baker Botts L.L.P.

(57) **ABSTRACT**

A wireless network includes a plurality of base stations that provide a wireless communication capability for a plurality of mobile stations. Each base station includes a local clock unit with a clock divider that generates local clock signals from a master clock signal received from a master clock source. The base stations are partitioned into a plurality of clusters. A sync pulse is propagated to each base station of the wireless network in order to reset their respective clock dividers. resetting of the clock dividers provides synchronization of local clock signals among the base stations. The sync pulse is propagated to all bases stations within a first cluster wherein one of the base stations in the first cluster is also a member of a second cluster. The base station that is part of the first and second clusters then propagates the sync pulse to other base stations in the second cluster and so on until the sync pulse has been delivered to all base stations in the wireless network.

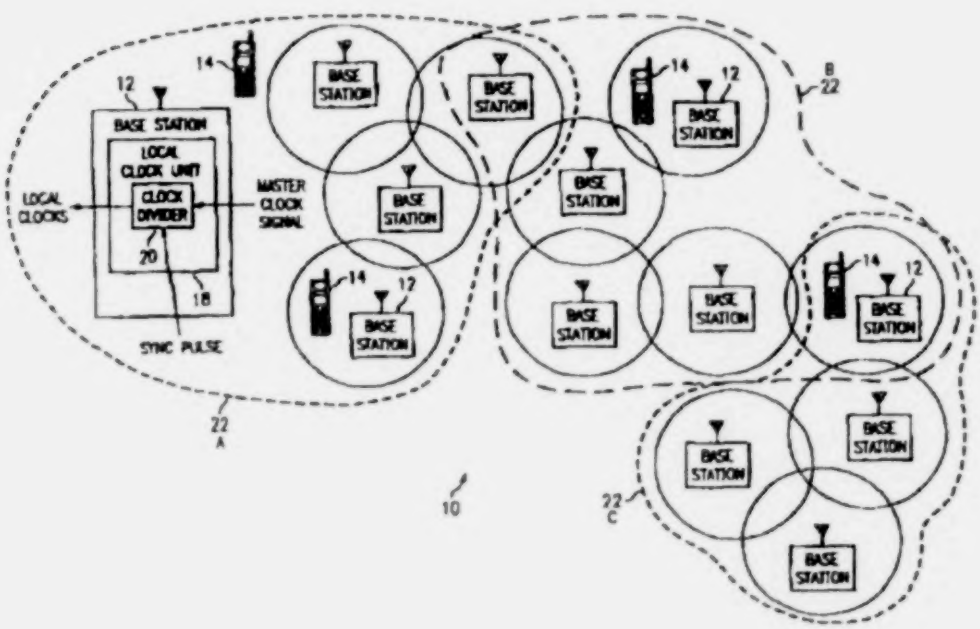

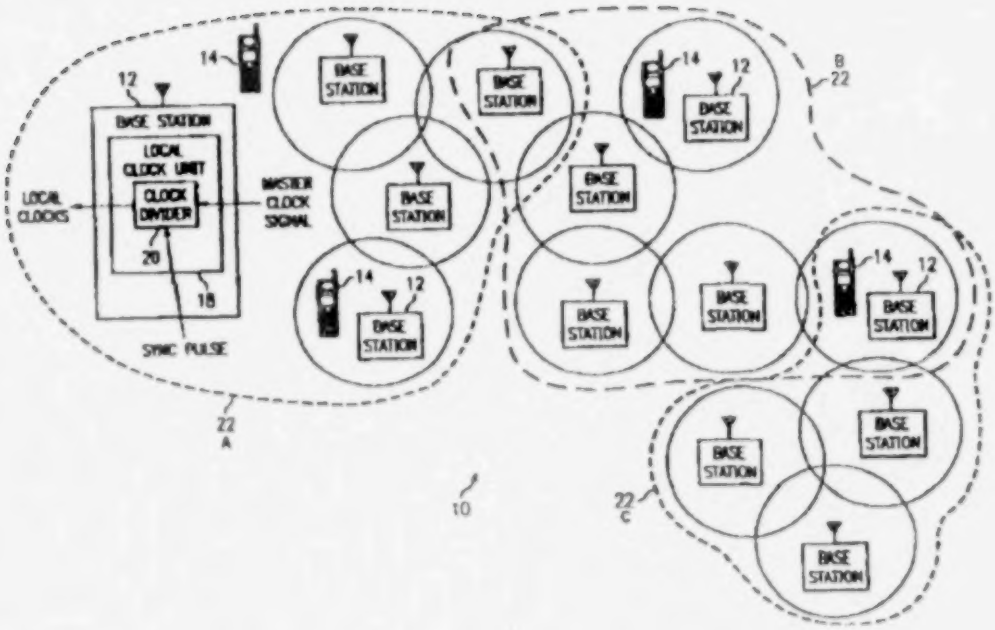

1

SYSTEM AND METHOD FOR SYNCHRONIZING CLOCK DIVIDERS IN A WIRELESS NETWORK

TECHNICAL FIELD OF THE INVENTION

The present invention relates in general to wireless network technology and more particularly to a system and method for synchronizing clock dividers in a wireless network.

BACKGROUND OF THE INVENTION

In Global System for Mobile Communications (GSM) wireless networks, controllers in the Mobile Switching Center (MSC) coordinate the handover (sometimes referred to as a handoff) of mobile users upon traveling from one cell or base station of the network to another cell of the network. Handover

may also be performed to relieve the load on a particular base station. The handover is a communication transfer for a particular mobile user form one base station to another base station. There may be a transfer period during which the uplink and downlink communications to the mobile user are severed with the base station of the first cell and not yet established at the base station of the second cell.

In order to optimize the performance of the handoff and reduce the possible break in the link, it is important to maintain frequency accuracy and, if possible, maintain network wide synchronization at base transceiver stations in a wireless network. Previously network wide synchronization of base transceiver stations had been achieved by using free running very accurate crystal oscillators or timing operations that determine and compensate for distances between base stations controllers and base transceiver stations at a base station. Free running oscillators present maintenance and stability issues, require the same equipment vendor for the base station controller and base transceiver stations, and require base transceiver stations to be associated with a single base station controller. Timing operations to compensate for distance are complex and expensive.

In public wireless networks, base stations may be equipped with Global Postiioning System (GPS receivers to provide a frequency and timing reference. The use of GPS receivers does not solve the problem since it is not always possible to receive the required radio signals from a GPS satellite or retransmitted signal, especially for private wireless

systems that are indoors. Moreover, the cost of these GPS receivers is justified in public wireless networks where a large number of calls are supported and the cost of the base station is very high. Private wireless networks may handle only a small number of calls and need to be much more cost effective, thus making a GPS receiver cost prohibitive. Even when a synchronized clock is provided to each base station, internal clock signals in each base station derived from the synchronized clock must also be synchronized so that time differences between internal clocks of different base stations is not too great to hinder providing a synchronized handoff. Therefore, it is desirable to provide effective handoff synchronization, especially for private wireless networks. In addition by synchronizing the base station radio interfaces it is possible to improve the voice quality of the network.

SUMMARY OF THE INVENTION

From the foregoing, it may be appreciated by those skilled in the art that a need has arisen for providing synchronization down to the internal signals of base stations in a wireless network. In accordance with the present invention, a system and method for synchronizing clock dividers in a wireless network is provided that substantially eliminates or greatly reduces disadvantages and problems associated with conventional wireless network synchronization techniques.

According to an embodiment of the present invention, there is provided a system for synchronizing clock dividers in a wireless network

that includes a first plurality of wireless base stations formed into a first cluster and a second plurality of wireless base stations formed into a second cluster. At least one first wireless base station in the first cluster has a wireless communication link to at least one first wireless base station in the second cluster. The first wireless base station in the first cluster transmits a synchronization signal to the wireless base stations in the first cluster and to the first wireless base station in the second cluster. The first wireless base station in the second cluster transmits the synchronization signal to other wireless base stations in the second cluster. All of the wireless base stations can reset their internal clock dividers in response to the synchronization signal.

The present invention provides various technical advantages over conventional wireless network synchronization techniques. For example, 01'1C technical advantage is to provide synchronization of clock dividers throughout a wireless network. Another technical advantage is to effectively distribute synchronization signals to base stations in a wireless network that cannot communicate with one another over a radio interface. Yet another technical advantage is to eliminate external source synchronize techniques and have the wireless network synchronize itself. Other technical advantages may be readily ascertainable by those skilled in the art from the following figures, description, and claims.

BRIEF DESCRIPTION OF THE DRAWINGS

For a more complete understanding of the present invention and the advantages thereof, reference is now made to the following description taken in conjunction with the 40 accompanying drawings, wherein like reference numerals represent like parts, in which:

FIG. 1 illustrates a simplified block diagram of cellular network.

DETAILED DESCRIPTION OF INVENTION

FIG. 1 shows a simplified block diagram of a wireless network **10**. Wireless network **10** includes a plurality of base stations **12** that provide conventional wireless communications capability with a plurality of mobile stations **14**.

In order to maintain effective communications capability for a particular mobile station **14**, base stations **12** are coordinated to pass control of the mobile station **14** communications among themselves as necessary so that no break in the communication path is experienced by mobile station **14**. This passing of communication control among base stations **12**, typically referred to as handoff, occurs as a result of movement of the mobile station **14** from the area of one base stations **12** to the area of another base station **12**. Handoff may also occur when the signal quality of communication degrades at the serving base stations **12** and another base station **12** has a less degraded communication capability.

To provide an efficient handoff capability, base stations 12 are synchronized among each other so that the handoff is not discernable by mobile station 14. An example of providing synchronization among base statiosn in a wireless network is shown in copending U.S. application Ser. No. 09/310,566 entitled "Synchronizaing Clock Signals In Wireless Networks" which is hereby incorporated by reference herein.

The synchronization described in the incorporated application provides for each base station 12 to be synchronized to a master clock signal, for example 10 MHz or 13 MHz, provided by a master clock source such as from a global positioning system. From that master clock signal, each base station 12 then derives local clock signals for internal base station operation. An effective handol1 also requires synchronization of local clock signals among the base stations 12.

Local clock signals al base stations 12 include frame and burst clocks derived from tbe master clock signal. To provide synchronized handoff in a GSM system, the time difference between the pulses of the frame and burst clocks from different base stations 12 is preferably not more than 900 nanosecond. Drift from the master clock signal within each base station 12 may lead to time differences that exceed this desired 900 nanosecond threshold, resulting in degradation of seamless handoff capabilities. To solve this problem, the present invention contemplates the transmission of a synchronizing pulse propagated throughout base stations 12 in

wireless network **10** to provide a synchronization capability at the frame and burst clock level.

Each base station **12** includes a local clock unit **18** having a clock divider **20** to derive the frame and burst clocks from a received master clock signal. Clock divider **20** provides a level of synchronization within base station **12** separate and apart from the synchronization provided by the master clock signal.

Wireless network **10** is partitioned into a plurality of partially overlapping clusters **22** to enable propagation of the sync pulse. The sync pulse is preferably transmitted among base stations **12** using the wireless interface. Base stations **12** within cluster A can communicate with each other over the radio interface. Base stations **12**, which belong to two adjacent clusters A and B where clusters overlap, can be used to propagate the sync pulse form one cluster to another. In this manner, clock dividers **20** from different base stations **12** can provide synchronization of frame and burst clock between different base stations **12** can eb within 70 nanoseconds, well within the desired 900 nanosecond error threshold.

Propagation of the sync pulse may be initiated by any base station **12** within wireless network **10** or by a designated base station **12** in a particular cluster **22**. Base stations **12** may be part of a public wireless network, private wireless network, or within both types of networks. Since the sync pulse is being propagated over the radio interface used by mobile stations **13** for communications, it is contemplated that sync pulse propagation be

performed at a low usage time of day in the late night or early morning hours so as not to impact usage of wireless network **10** by mobile stations **14**. It is also contemplated that the sync pulse be propagated on a once per day basis, non-periodically, or with more frequent periodicity.

Thus, it is apparent that there has been provided, in accordance with the present invention, a system and method for synchronizing the clock dividers in a wireless network that satisfy the advantages set forth above. Although the present invention has been described in detail, it should be understood that various changes, substitutions, and alterations may be readily ascertainable by those skilled in the art and may be herein without departing from the spirit and scope of the present invention as defined by the following claims.

What is claimed is:

1. A system for synchronizing clock dividers in a wireless network, comprising:

2.

a first plurality of wireless base stations formed into a first cluster;

a second plurality of wireless base stations formed into a second cluster;

wherein at least a first wireless base station in the first cluster has a wireless communication link to a first wireless base station in the second cluster, and wherein the first wireless base station

in the first and second clusters each include a local clock unit having an internal clock divider that is operable to derive frame and burst clocks from a received master clock signal;

wherein the first wireless base station in the first cluster is operable to transmit a synchronization pulse to other wireless base stations in the first cluster and to the first wireless base station in the second cluster;

wherein the first wireless base station in the second cluster is operable to transmit the synchronization pulse to other wireless base stations in the second cluster;

wherein the first wireless base stations are operable to resent the internal clock dividers in response to the synchronization pulse in order to achieve a level of synchronization separate from the synchronization provided by the mater clock signal.

3. The system of claim 1, wherein the first wireless base station of the first cluster also lies in the second cluster.

4.

5. The system of claim 1, wherein the synchronization pulse is propagated to all wireless base stations over a wireless transmission link.

6. The systems of claim 3, wherein the propagation of the synchronization pulse occurs over a same wireless transmission link as used by all base stations to communicate with mobile stations.

7. The system of claim 3, wherein the propagation of the synchronization pulse occurs over the wired link used to connect the base stations to the network.

8. The system of claim 4, wherein the synchronization pulse is transmitted during a mobile station low usage period.

9. The system of claim 1, wherein the synchronization pulse is transmitted on a periodic basis.

10. The system of claim 1, wherein the synchronization pulse is transmitted on a non-periodic basis.

11. The system of claim 1, wherein the internal clock dividers are operable to generate local signals for use by corresponding base stations in response to receipt of the mater clock signal.

12. The system of claim 9, wherein the synchronization pulse is operable to provide synchronization of local signals among all of the wireless base stations.

13. The system of claim 10, wherein the local signals between all of the wireless base stations

are synchronized to within one period of the master clock signal.

14. A method for synchronizing clock dividers in a wireless network, comprising;

grouping first a plurality of wireless base stations into a first cluster;

grouping a second plurality of base stations into a second cluster;

transmitting a synchronization pulse to each of the first plurality of wireless base stations in the first cluster, wherein at least a first wireless base station in the first cluster has a wireless communication link to a first wireless base station in the second cluster, and wherein the first wireless base stations in the first and second cluster s each include a local clock unit having an internal clock divider that is operable to derive frame and burst clocks from a received master clock signal;

wherein the first wireless base station in the first cluster is operable to transmit a synchronization pulse to other wireless base stations in the first cluster and to the first wireless base station in the second cluster;

wherein the first wireless base station in the second cluster is operable to transmit

the synchronization pulse to other wireless base stations in the second cluster;

transmitting the synchronization pulse to the second plurality of wireless base stations in the second cluster;

resetting the internal clock dividers in each wireless base stations in response to the synchronization pulse in order to achieve a level of synchronization separate from the synchronization by the master clock signal.

15. The method of claim 12, wherein the synchronization pulse is transmitted over a same wireless interface used for communications by mobile stations.

16. The method of claim 12, wherein the synchronization signal is transmitted periodically from a particular one of the first plurality of wireless base stations in the first cluster.

17. The method of claim 12, wherein the synchronization pulse is transmitted on a non-periodic basis.

18. A wireless base station for use in a wireless network, comprising;

a local unit having a clock divider operable to receive a master clock signal, the clock divider operable to generate local

signals in response to maters clock signal and to derive frame and burst clocks from the master clock signal;

wherein the wireless base station is a first wireless base station in a first cluster of plurality of wireless base stations having a wireless communication link to first wireless base stations in a second cluster of plurality of wireless base stations, and wherein the first wireless base station in the first and second clusters each include the local clock unit having the internal clock divider that is operable to derive frame and burst clocks from the received master clock signal; and

a wireless interface operable to receive a synchronization pulse, the clock divider operable to reset in response to the synchronization pulse so that the local signals can be synchronized with local signals from other base stations in order to achieve a level of synchronization separate from the synchronization provided by the master clock signal.

19. The base of claim 16, wherein the wireless interface is operable to transmit the synchronization pulse to one of more other base stations.

20. The base station of claim **16**, wherein the wireless interface provides communications for one for more mobile stations.

21. The base stations of claim **16**, wherein the local signals are synchronized to within one period of the master clock signal.

* * * * *

HIGHLY CONFIDENTIAL

Understanding the Lightweight Access Point Protocol (L WAPP)

There is a trend in the Wireless LAN (WLAN) space towards centralized intelligence. In this new architecture, a WLAN system device (e.g., wireless switch, appliance, router, etc.) is used to create and enforce policies across many different "lightweight" Access Point (APs). By centralizing intelligence within these centralized devices, security, mobility, QoS, and other functions essential to WLAN operations can be efficiently managed across an entire wireless enterprise. Furthermore, by shift functionality from the AP, 1T staff can simplify management, improve performance, and increase security of large wireless networks.

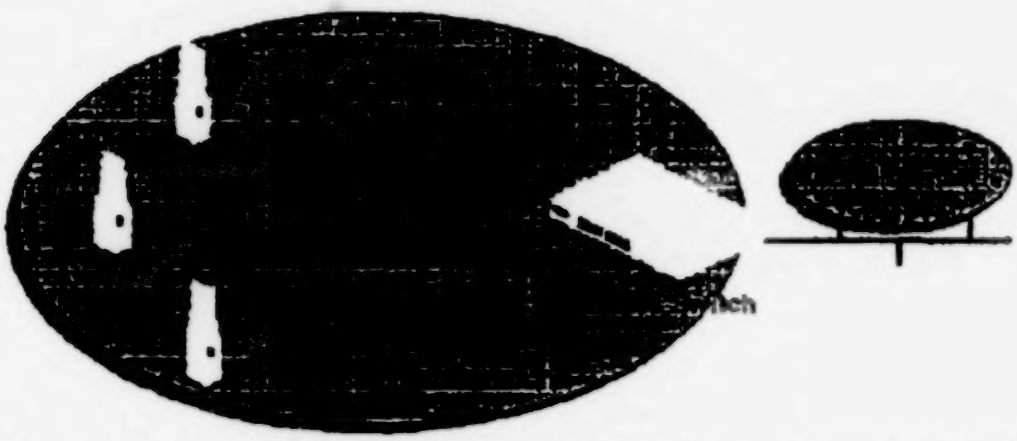

As more vendors migrate towards a hierarchical design. and as larger networks are built using lightweight access points, the need exists for a standardized protocol that governs how exactly lightweight APs communicate with WLAN system devices. This is the role aftbe IETF's latest draft specification, the Light Weight Access Point Protocol (LW APP). With L W APP. large multi-vendor

wireless networks can be deployed with maximum functionality and increased flexibility.

Why a Lightweight Access Point?

Traditional WLAN solutions distribute all traffic handling, RF control, security. And mobility functions to the AP itself. This architecture,. often known as the "Fat AP" or "'Peer-t~Pecr" architecture, was first introduced in 1991 and promulgated by incumbent networking vendors, such as Cisco and Proxim. However, this limits visibility of802.11 traffic to an individual AP only. This means:

- lndividual access point must be managed one at a time, which drives up operations costs and increases staffing requirements
- Network-wide attacks and interference are not visible on a system-wide basis,
    - Limited to single point of enforcement for policies such as security (Ll, L2, and LJ) and Quality or Servic. (QoS)
    - Unable to detect and mitigate Denial of Service (DoS) attacks across the entire WLAN
- The system does not correlate or predict activity such as changes in signal strength or client roaming

- Limits on the ability to enable optimized, real-time load balancing
- Clients cannot perform fast handoffs (I.e., support applications such as voice).

- There is an inherent security risk. if an AP is stolen or compromised.

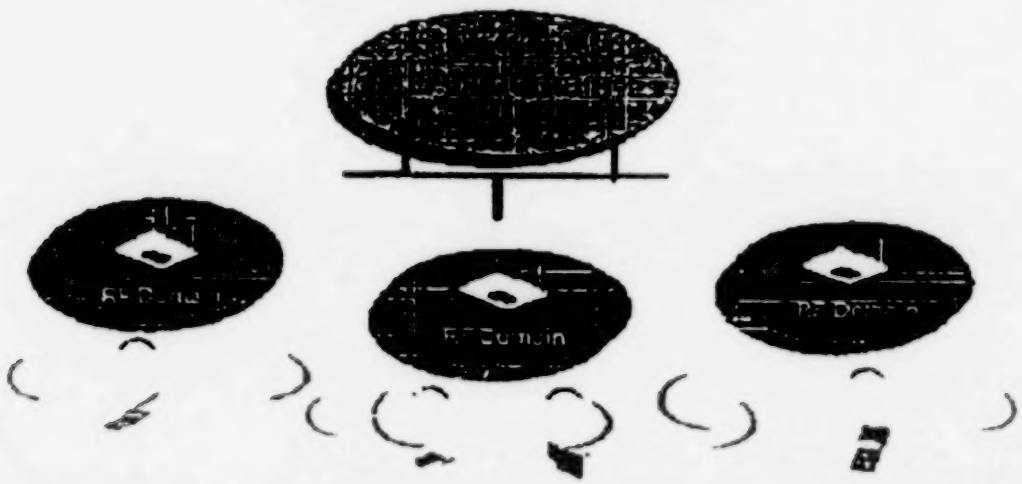

Airespace is leading the way to address the limitations of a peer-to-peer WLAN architecture (listed above), effectively pacing almost all of the incumbent networking vendors which have recently announced new architectures that centralize WLAN intelligence for better performance and efficiency. Consequently, there is a clear shift in the WLAN space towards a new schema for wireless operations.

The Need for Standardization: Enter The Lightweight Access Point Protocol

As new products emerge that leverage lightweight APs with centralized WLAN intelligence, the need exists for an industry standard that governs how these devices communicate with one another. The

Lightweight Access Point Protocol is an effort underway in the International Engineering Task: Force (JETF) to address this. Authored initially by Airespace and NIT DoCoMo. L W *APP* standardizes the communications protocol between access points and WLAN system devices (switches, appliances, routers, etc.). The goal of this initiative, as described in the IETF specification itself, is to:

- Reduce the amount of processing within the AP, enabling limited computing resources within these devices to focus on wireless access, as opposed to filtering and policy enforcement.

- Enable a scheme whereby traffic handling. authentication, encryption, and policy enforcement (QoS, security, etc) can be centralized for an entire WLAN system

- Provide a generic encapsulation and transport mechanism for multi-vendor AP interoperability, either by means if a Layer 2 infrastructure or an II' routed network

The LWAPP specification works to address these issues by defining the following types of activities:

- AP device discovery, information exchange, and configuration

- *PoP* certification and software control

- Packet encapsulation, fragmentation, and formatting

- Communications control and management between AP and wireless system device.

Widespread L W APP adoption would enable enterprise customers to get an array of interoperated access points and wireless system devices. Customers would be able to make decisions based not on whether pieces of gear work together. but on the functionalities of individual access points and wireless system devices. Gaining industry acceptance of L W APP will decrease single vendor proprietary Jock-in that requires that access points only to be connected to their WLAN system devices to derive key networking functionality. Finally, with L W APP, third-party vendors have a common architecture for application development.

Putting LWAPP to Use

Airespace revolutionized the WLAN industry in 2002 when it first introduced the concept of a "split MAC". This refers to the ability to separate the real-time aspects of the 802.11 protocol from most of the management aspects of the protocol. In particular, the real-time frame exchange protocol and certain real-time portions of MAC Management are accomplished in a lightweight AP. while the MAC Management part of the protocol that relates to authentication. security management, and mobility are accomplished in WLAN switches and/or appliances.

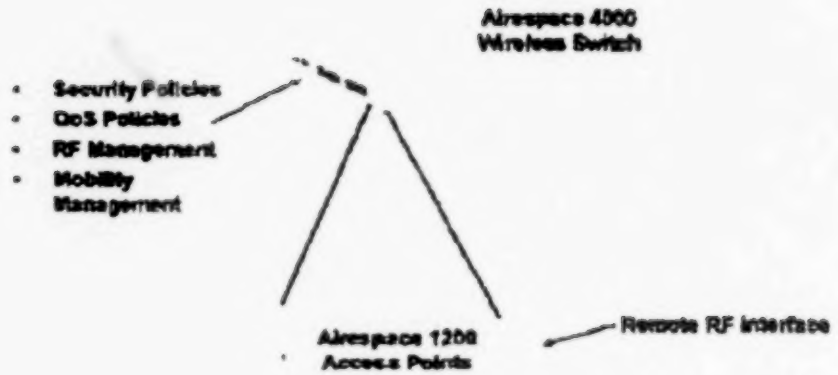

Airespace was the first to implement LW APP in a commercially amiable WLAN solution as a practical means of splitting MAC functionality between WLAN components. When LWAPP is combined with Airespace's unique. patent-pending AireWave Director™ Software, the following benefits can be achieved:

Management

- Dynamic, system-wide RF management. This includes a host of features for seamless wireless operations, including dynamic channel assignment, transmit power control, load balancing, etc.

- Single graphical interface for enterprise-wide policies, including VLANs, security, and QoS.

Security:

- Enterprise-wide security policies that encompass all layers of a wireless network from the radio layer, through

the MAC layer, into the network layer. This provides for greater abilities to provide uniformly enforced security and quality of service or user policies that can address the particular capabilities of varying classes of device from handheld scanners, to PDAs, to notebook computers.

- Discovery and mitigation or DoS attacks; detection and denial of rogue APs. Both of these functions occur across an entire Airespace wireless enterprise.

Mobility:

- Cellular-like fast handoffs
- Excellent support for real-lime, mobile applications (e.g., Voice over WLAN).

LWAPP is an essential building block for business-critical wireless networks. It is a foundation upon which large scale, heterogeneous wireless LANs can be constructed. By providing a standardized approach for RF internetworking, L W APP future-proofs WLAN deployments, takes the pain out of RF management, and optimizes wireless networking for enterprise deployment.

The latest version of the LWAPP specification is posted on the Airespace website at:

http://www.airespace.com/html/Iwapp.txt

(12) **EX PARTE REEXAMINATION CERTIFICATE** (8707th)

United States Patent (10)**Number: US 6,430,395 C1**
Arazi et al. (45)**Certificate Issued: Nov. 29, 2011**

(54) **WIRELESS PRIVATE BRANCH EXCHANGE (WPBX) AND COMMUNICATING BETWEEN MOBILE UNITS AND BASE STATIONS**

(75) Inventors: **Nitzan Arazi**, Ramat Hasharon (IL); **Yaron Soffer**, Nes-Ziona (IL); **Haim Barak**, Kfar Saba (IL)

(73) Assignee: **Commil USA LLC**, The Woodlands, TX (US)

Reexamination Request:
No. 90/011,527, Mar. 2, 2011

Reexamination Certificate for:
Patent No.: **6,430,395**
Issued: **Aug. 6, 2002**
Appl. No.: **09/784,109**
Filed: **Feb. 16, 2001**

Related U.S. Application Data

(60) Provisional application No. 60/195,219, filed on Apr. 7, 2000, and provisional application No. 60/208,306, filed on Jun. 1, 2000.

(51) **Int. Cl.**
H04B 5/00 (2006.01)

(52) **U.S. Cl.**.....**455/41.2**; 370/347; 370/466

(58) **Field of Classification Search** ..... None
See application file for complete search history.

(56) **References Cited**

To view the complete listing of prior art documents cited during the proceeding for Reexamination Control Number 90/011,527, please refer to the USPTO's public Patent Application Information Retrieval (PAIR) system under the Display References tab.

Primary Examiner–Minh Dieu Nguyen

(57) **ABSTRACT**

Methods to create a cellular-like communication system, such as a Wireless Private Branch Exchange (WPBX), which includes mobile devices such as standard cordless phones (handsets), particularly, mobile devices utilizing the Bluetooth short-range wireless communication protocol. The methods provide seamless and reliable handoff of sessions between Base Stations while the mobile device is moving between picocells, by implementing a high-level of synchronization between the Base Stations and the Switch. Base Stations of picocells having small coverage areas communicate with the handsets. The communication protocol is divided into a low-level protocol performed by the Base Stations and a high-level protocol performed by the Switch connected to all the Base Stations. The methods support mobile computing or telephony devices and communication protocols, which are not specified to handle handoffs of sessions while moving

between Base Stations coverage areas in a data, voice or telephony wireless network.

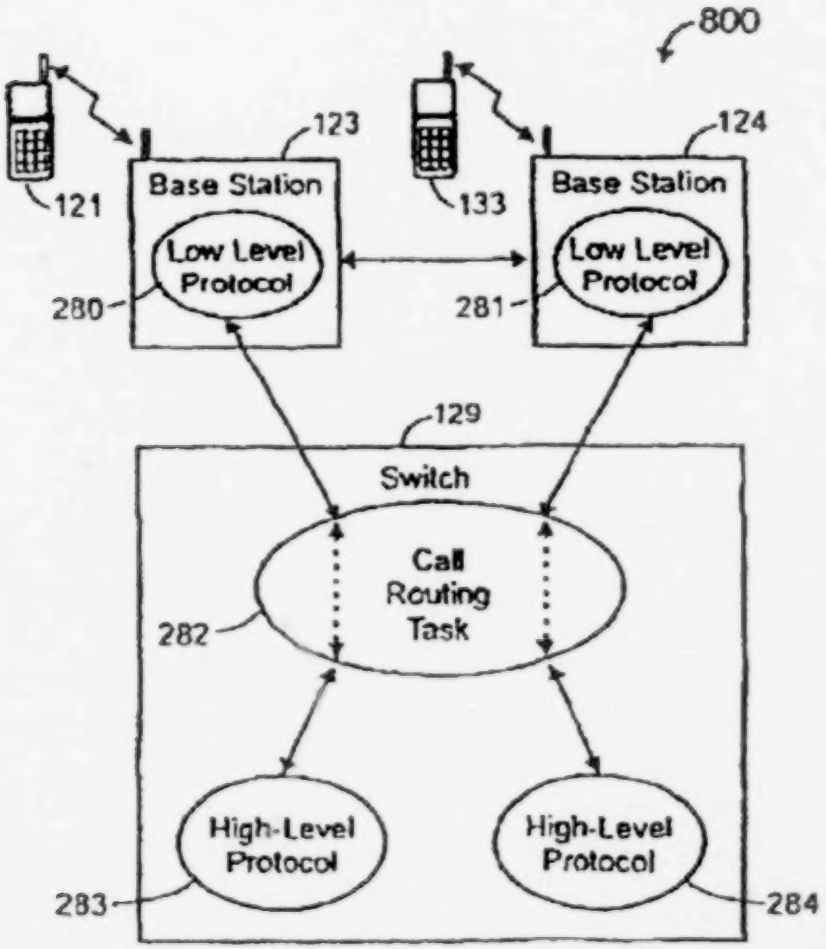

1

EX PARTE
REEXAMINATION CERTIFICATE
ISSUED UNDER 35 U.S.C. 307

THE PATENT IS HEREBY AMENDED AS INDICATED BELOW.

Matter enclosed in heavy brackets [ ] appeared in the patent, but has been deleted and is no longer a part of the patent; matter

printed in italics indicates additions made to the patent.

AS A RESULT OF REEXAMINATION, IT HAS BEEN DETERMINED THAT:

The patentability of claims **1-12** is confirmed.

New claims **13-41** are added and determined to be patentable.

13. Method, according to claim 1, wherein the low-level protocol comprises procedures for frequency hopping.

14. Method, according to claim 1, wherein the low-level protocol comprises procedures for error connection.

15. Method, according to claim 1, wherein the low-level protocol comprises procedures for forward error correction.

16. Method, according to claim 1, wherein the low-level protocol comprises procedures for device addressing.

17. Method, according to claim 1, wherein the low-level protocol comprises procedures for rough Time Of Day (TOD) synchronization.

18. Method, according to claim 1, wherein the low-level protocol comprises procedures for voice channel allocation.

19. Method, according to claim 1, wherein the low-level protocol comprises procedures for encryption keys.

20. Method, according to claim 1, wherein the low-level protocol comprises procedures for authentication keys.

21. Method, according to claim 1, wherein the low-level protocol comprises procedures for voice coding.

22. Method, according to claim 1, wherein the low-level protocol comprises procedures for address of a parked mobile unit.

23. Method, according to claim 1, wherein the low-level protocol comprises procedures for definition of an asynchronous data link.

24. Method, according to claim 1, wherein the low-level protocol comprises procedures for data FIFOs.

25. Method, according to claim 1, wherein the low-level protocol comprises procedures for link setup and control.

26. Method, according to claim 1, wherein the low-level protocol comprises procedures for performing tasks that do not require accurate time synchronization.

27. Method, according to claim 1, wherein the low-level protocol comprises procedures only for performing tasks that require accurate time synchronization.

28. Method, according to claim 1, wherein the short range communication protocol is Bluetooth.

29. Method, according to claim 1, wherein the short-range communication protocol permits data communication.

30. Method, according to claim 1, further comprising:

Performing a handoff of a mobile unit between a first Base Station and a second Base Station.

2

31. Method, according to claim 1, wherein the mobile units do not include built-in support for handoff between Base Stations, and wherein the short-range communication protocol supports data applications.

32. Method, according to claim 1, wherein the method comprises:

communicating connection status information between the Base Stations.

33. Method, according to claim 1, wherein the method comprises:

communicating connection synchronization information between the Base Stations.

34. Method, according to claim 1, wherein the Base Stations comprise a first Base Station and a second Base Station, wherein the first Base Station is

initially connected to a first mobile unit using a first instance of the low-level communication protocol, wherein the method comprises:

the second Base Station receiving information from the first instance of the low-level communication protocol;

the second Base Station communicating with the first mobile unit using the receiving information from the first instance of the low-level communication protocol.

35. Method, according to claim 1, further comprising:

performing a handoff of a mobile unit between a first Base Station and a second Base station, wherein said performing the handoff comprises providing low-level communications protocol states and parameters from the first Base Station to the second Base Station.

36. Method, according to claim 1, further comprising:

performing a handoff of a mobile unit between a first Base Station and a second Base Station, wherein said performing the handoff comprises performing synchronization between the first Base Station and the second Base Station.

37. Method, according to claim 1, further comprising:

performing a handoff of a mobile unit between a first Base Station and a second Base Station, wherein said performing the handoff comprises synchronizing a first instance of the low-level protocol on the first Base Station with a second instance of the low-level protocol on the second Base Station.

38. Method, according to claim 37, wherein synchronizing the first instance with the second instance comprises sending parameters of the first instance from the first Base Station to the second Base Station for use in the second instance.

39. Method, according to claim 1, further comprising:

a neighboring Base Station of a first Base Station storing information regarding connections of the first Base Station.

40. Method, according to claim 1, further comprising:

executing a real time multi-tasking operating system on each Base Station in order to allow handling of a plurality of instances of the low-level protocol.

41. Method, according to claim 1, wherein at least one of the mobile units supports the short-range communication protocol.

* * * * *

IN THE UNITED STATES DISTRICT COURT
FOR THE EASTERN DISTRICT OF TEXAS
MARSHALL DIVISION

COMMIL USA	* Civil Docket No.
	* 2:07-CV-341
vs.	* Marshall, Texas
	*
	* April 8, 2011
CISCO SYSTEMS, INC., ET AL	* 12:45 P.M.
	*

TRANSCRIPT OF JURY TRIAL
BEFORE THE HONORABLE
CHAD EVERINGHAM
UNITED STATES MAGISTRATE JUDGE

APPEARANCES:

FOR THE PLAINTIFFS:

MR. MARK S. WERBNER
MR. RICHARD A. SAYLES
MR. MARK D. STRACHAN
Sayles Werbner
1201 Elm Street
4400 Renaissance Tower
Dallas, TX 75270

FOR THE DEFENDANTS:

(CISCO)

MR. HENRY B. GUTMAN
MR. JEFFREY E. OSTROW
MR. HARRISON J. FRAHN, IV
MR. JONATHAN SANDERS
Simpson Thacher & Bartlett
2550 Hanover St.
Palo Alto, CA 94304

APPEARANCES CONTINUED ON NEXT PAGE:

COURT REPORTERS:

MS. SUSAN SIMMONS, CSR
MS. SHELLY HOLMES, CSR
Official Court Reporters
100 East Houston, Suite 125
Marshall, TX 75670
903/935-3868

(Proceedings recorded by mechanical stenography, transcript produced on CAT system.)

APPEARANCES CONTINUED:

Q. This architecture opened up an entire new market with the large business enterprises, didn't it?

A. Yes.

Q. This architecture, in your own words, was revolutionary, wasn't it?

A. Yes.

Q. This architecture was a driving force behind the 100 million dollars' worth of sales that you mentioned, correct?

A. Oh, yes, absolutely.

Q. And this architecture was a driving force in

the billion dollars of sales that Cisco made, correct?

A. I don't know about the amount of sales, but it certainly drove sales.

Q. Assume that it's over $1.2 billion since the first sales up through a month or two ago.

Would you agree that that kind of phenomenal success is, in large part, driven by these new products?

A. Yes, absolutely.

PETITIONER'S BRIEF

RECORD AND BRIEFS

No. 13-896

Supreme Court U.S.
FILED
JAN 20 2015
OFFICE OF THE CLERK

In The
Supreme Court of the United States

COMMIL USA, LLC,

Petitioner,

v.

CISCO SYSTEMS, INC.,

Respondent.

ON WRIT OF CERTIORARI TO THE UNITED STATES COURT OF APPEALS FOR THE FEDERAL CIRCUIT

BRIEF OF PETITIONER

MARK S. WERBNER
Counsel of Record
RICHARD A. SAYLES
MARK D. STRACHAN
DARREN P. NICHOLSON
SAYLES | WERBNER P.C.
4400 Renaissance Tower
1201 Elm Street
Dallas, TX 75270
(214) 939-8700
mwerbner@swtriallaw.com

Counsel for Petitioner
Commil USA, LLC

LESLIE V. PAYNE
NATHAN J. DAVIS
MIRANDA Y. JONES
HEIM, PAYNE & CHORUSH, LLP
JP Morgan Chase Tower
600 Travis, Suite 6710
Houston, TX 77002
(713) 221-2000

Counsel for Petitioner
Commil USA, LLC

PETITION FOR CERTIORARI FILED JANUARY 23, 2014
CERTIORARI GRANTED DECEMBER 5, 2014

THE LEX GROUP DC • 1825 K Street, N.W. • Suite 103 • Washington, D.C. 20006
(202) 955-0001 • (800) 856-4419 • Fax: (202) 955-0022 • www.thelexgroup.com

Library of Congress

QUESTION PRESENTED

Under 35 U.S.C. § 271(b), "[w]hoever actively induces infringement of a patent shall be liable as an infringer." The question presented is:

1. Whether a good-faith belief that a patent is invalid is a defense to inducement liability under Section § 271(b).

PARTIES TO THE PROCEEDING

The petitioner here, and plaintiff-appellee in the Federal Circuit, is Commil USA, LLC ("Commil"). The respondent here, and the defendant-appellant in the Federal Circuit, is Cisco Systems, Inc. ("Cisco").

RULE 29.6 STATEMENT

Pursuant to Rule 29.6 of the Rules of this Court, petitioner Commil USA, LLC states that it has no parent corporation and no publicly held company owns 10 percent or more its stock.

TABLE OF CONTENTS

Page

QUESTION PRESENTED i

PARTIES TO THE PROCEEDING ii

RULE 29.6 STATEMENT ii

TABLE OF CONTENTS iii

TABLE OF AUTHORITIES ix

OPINIONS BELOW 1

JURISDICTION 1

STATUTORY PROVISIONS INVOLVED 2

INTRODUCTION 2

STATEMENT OF THE CASE 3

A. Commil's Patent 3

B. Cisco's Infringing Products 6

C. Cisco's Knowledge of Commil's Patent 8

D. Procedural History 9

i. Proceedings at the District Court 9

ii. Proceedings at the United States Patent & Trademark Office ("USPTO") 11

iii. Proceedings at the Federal Circuit 11

SUMMARY OF THE ARGUMENT 13

ARGUMENT 15

I. Overview of the Intent Requirement for Inducement and the Nature of the Dispute Presented 15

II. "Good-faith Belief" Defenses Are Irrelevant to the Intent Requirement for Inducement Under Section 271(b) 21

A. Supreme Court Precedent Correctly Establishes That "Good-faith Beliefs" Are Irrelevant to the Intent Requirement for Indirect Infringement 21

B. "Good-faith Belief" Defenses Are Contrary to the Purpose and Policies Underlying 35 U.S.C. §§ 271(b) and (c) 28

i. Congress Enacted 35 U.S.C. §§ 271(b) and (c) to Provide Patent Owners With A Remedy For Infringement Where Enforcement Against Direct Infringers is Impracticable 29

ii. The Purposes of the Knowledge/Intent Requirement for Indirect Infringement 34

iii. "Good-Faith Belief" Defenses Undermine the Purposes and Policies Underlying 35 U.S.C. §§ 271(b) and (c) 36

III. Even if a "Good-faith Belief" in Non-Infringement Were Relevant to Section 271(b), a "Good-faith Belief" in Invalidity is Not 44

A. The Patent Act Treats Infringement and Validity as Separate Issues 44

B. Case Law Recognizes Infringement and Validity as Separate Issues 46

C. Releasing Inducers from Liability Based on A Mistaken Belief that the Patent is Invalid is Contrary to the Statutory Presumption of Validity 50

CONCLUSION 53

JOINT APPENDIX

Docket Sheet for Commil USA, LLC v. Cisco Systems, Inc., United States District Court for the Eastern District of Texas, Case No. 07-CV-0341 ..... 1a

Docket Sheet for Commil USA, LLC v. Cisco Systems, Inc., United States Court of Appeals for the Federal Circuit, Case No. 2012-1042 ..... 8a

Jury Instructions in Jury Trial before The Honorable Chad Everingham on April 8, 2011 ..... 11a

Verdict Form entered April 8, 2011 ..... 34a

Plaintiff's Fourth Amended Complaint entered October 8, 2009 ..... 36a

Excerpts of Trial Transcript before
The Honorable Chad Everingham
Morning Session
on May 12, 2010 ..... 43a

Excerpts of Trial Transcript before
The Honorable Chad Everingham
Morning Session
on May 14, 2010 ..... 54a

Excerpts of Trial Transcript before
The Honorable Chad Everingham
Afternoon Session
on April 5, 2011 ..... 60a

Excerpts of Trial Transcript before
The Honorable Chad Everingham
Afternoon Session
on April 6, 2011 ..... 81a

Excerpts of Trial Transcript before
The Honorable Chad Everingham
Afternoon Session
on April 8, 2011 ..... 96a

PTX 273 – Changing the Game for WLANs: Airespace's Breakthrough "Split MAC" Architecture..... 102a

PTX 276A – Split 802.11 MAC Processing... 116a

PTX 332 – Patent Application 09/982,591 ..129a

PTX 333 – U.S. Patent No. 6,975,877 ..... 135a

PTX 341 – Understanding the Lightweight Access Point Protocol (LWAPP) 152a

Reexamination Certificate..... 159a

Excerpts of Trial Transcript before The Honorable Chad Everingham Morning Session on April 7, 2011 ..... 167a

TABLE OF AUTHORITIES

Page(s)

CASES

American Hoist & Derrick Co. v. Sowa & Sons, Inc.,
725 F.2d 1350 (Fed. Cir. 1984) 51

Aro Mfg. Co. v. Convertible Top Replacement Co.,
365 U.S. 336 (1961) 23

Aro Mfg. Co. v. Convertible Top Replacement Co.,
377 U.S. 476 (1964) ..... *passim*

Bilski v. Kappos,
130 S. Ct. 3218 (2010) 31

Bonito Boats v. Thunder Craft Boats,
489 U.S. 141 (1989) 52

Bose Corp. v. SDI Techs., Inc.,
558 Fed. Appx. 1012 (Fed. Cir. 2014) 38

CEATS, Inc. v. Cont'l Airlines, Inc.,
755 F.3d 1356 (Fed. Cir. 2014) 48

Commil USA, LLC v. Cisco Sys., Inc.,
No. 2:07-cv-341, Dkt. No. 42
(E.D. Tex. Nov. 30, 2007) 41

Connell v. Sears, Roebuck & Co.,
722 F.2d 1542 (Fed. Cir. 1983) 48

Cortelyou v. Charles Eneu Johnson & Co.,
207 U.S. 196 (1907) 26, 27, 34

Dow Chemical Co. v. Halliburton Oil Well Cementing Co.,
324 U.S. 320 (1945) 50

DSU Medical Corp. v. JMS Co.,
471 F.3d 1293 (Fed. Cir. 2006) 11, 12, 18, 19

Ecolab, Inc. v. FMC Corp.,
569 F.3d 1335 (Fed. Cir. 2009) 19

Exergen Corp. v. Wal-Mart Stores, Inc.,
575 F.3d 1312 (Fed. Cir. 2009) 48

Global-Tech Appliances, Inc. v. SEB S.A.,
131 S. Ct. 2060 (2011) ..... *passim*

Henry v. A.B. Dick Co.,
224 U.S. 1 (1912) ..... *passim*

In re Innovatio IP Ventures, LLC, Patent Litigation,
No. 1:11-cv-9308, Dkt. No. 233
(N.D. Ill. May 16, 2012) 33, 34

Individual Drinking Cup Co. v. Errett,
297 F. 733 (2d Cir. 1924) 34-35

Jerman v. Carlisle, McNellie, Rini, Kramer & Ulrich, L.P.A.,
559 U.S. 573 (2010) 37

Kinetic Concepts, Inc. v.
Blue Sky Med. Group, Inc.,
554 F.3d 1010 (Fed. Cir. 2009) 19

Lazare Kaplan Int'l, Inc. v.
Photoscribe Techs., Inc.,
714 F.3d 1289 (Fed. Cir. 2013) 47

Markman v. Westview Instruments,
517 U.S. 370 (1996) 46

Mayo Collaborative Servs. v.
Prometheus Labs., Inc.,
132 S. Ct. 1289 (2012) 46

Medtronic, Inc. v. Cardiac Pacemakers, Inc.,
721 F.2d 1563 (Fed. Cir. 1983) 46, 47

Metro-Goldwyn-Mayer Studios, Inc. v.
Grokster, Ltd.,
545 U.S. 913 (2005) 35

Microsoft Corp. v. i4i Ltd. Partnership,
131 S. Ct. 2238 (2011) 51, 52

Motion Picture Patents Co. v.
Universal Film Mfg. Co.,
243 U.S. 502 (1917) 26

Nautilus, Inc. v. Biosig Instruments, Inc.,
134 S. Ct. 2120 (2014) 46

Oplus Techs., Ltd. v. Sears Holdings Corp.,
No. 2:12-cv-05707,
2013 U.S. Dist. LEXIS 145917
(C.D. Cal. Oct. 2, 2013) 38

Pandrol USA, LP v. Airboss Ry. Prods., Inc.,
320 F.3d 1354 (Fed. Cir. 2003) 47

Prima Tek II, L.L.C. v. Polypap S.A.R.L.,
412 F.3d 1284 (Fed. Cir. 2005) 48, 49

Richdel, Inc. v. Sunspool Corp.,
714 F.2d 1573 (Fed. Cir. 1983) 48, 49

Sandt Tech., Ltd. v. Resco Metal & Plastics Corp.,
264 F.3d 1344 (Fed. Cir. 2001) 49, 50

Sony Corp. of Am. v. Universal City Studios, Inc.,
464 U.S. 417 (1984) 35

Spectra-Physics, Inc. v. Coherent, Inc.,
827 F.2d 1524 (Fed. Cir. 1987) 48, 49

Ultratec, Inc. v. Sorenson Communs., Inc.,
No. 13-cv-346,
2014 U.S. Dist. LEXIS 120134
(W.D. Wis. Aug. 28, 2014) 40

Unique Concepts, Inc. v. Brown,
939 F.2d 1558 (Fed. Cir. 1991) 47

STATUTES

28 U.S.C. § 1254(1) 1

28 U.S.C. § 1295(a)(1) 11

28 U.S.C. § 1331 9

28 U.S.C. § 1338(a) 9

35 U.S.C. § 102 9

35 U.S.C. § 103 9

35 U.S.C. § 112 9

35 U.S.C. § 271 ..... 30, 44

35 U.S.C. § 271(a) 9, 42, 43

35 U.S.C. § 271(b) ..... *passim*

35 U.S.C. § 271(c) ..... *passim*

35 U.S.C. § 282 ..... 45, 50

35 U.S.C. § 282(a) 2

35 U.S.C. §§ 282(b)(2)-(3) 36, 44, 45

35 U.S.C. § 304 39

35 U.S.C. § 314(a) 40

RULES

Fed. R. Civ. P. 11 41

Fed. R. Civ. P. 11(b) 41

Fed. R. Evid. 401 10

Fed. R. Evid. 403 10

OTHER AUTHORITIES

5-17 Chisum on Patents § 17.04[4][f] 31

Contributory Infringement in Patents–Definition of Invention: Hearings on H.R. 5988 before the Subcomm. on Patents, Trademarks, & Copyrights of the H. Comm. on the Judiciary, 80th Cong., 2nd Sess., ser. 21 (1948) 31-32

Giles S. Rich, Address Before the N.Y. Pat. Law Ass'n (Nov. 6, 1952), *reprinted in* 3 J. FED. CIR. HIST. SOC'Y 103 (2009) 33

H.R. 5988, 80th Cong., 2d Sess.; H.R. 3866, 81st Cong., 1st Sess.) 31

H.R. Rep. No. 1923 on H.R. 7794, 82d Cong., 2d Sess. 30

Richard A. Oppel, Jr., *Giles S. Rich, Oldest Active Federal Judge, Dies at 95*, N.Y. Times, June 12, 1999, *available at* http://www.nytimes.com/1999/06/12/business/giles-s-rich-oldest-active-federal-judge-dies-at-95.html 31

Senate Rep. No. 82-1979 on H.R. 7794.....30

Statement of Giles Rich, Hearings before Subcommittee No. 3 of House Judiciary Committee on H.R. 3760, 82d Cong., 1st Sess.....32, 33

OPINIONS BELOW

The Federal Circuit panel opinions, including a majority opinion and two opinions concurring-in-part and dissenting-in-part, are reported at 720 F.3d 1361. Pet. App. 1a-39a[1]. The Federal Circuit order denying Commil's petition for rehearing *en banc*, including opinions dissenting from the denial joined by five of the eleven participating Federal Circuit judges, is reported at 737 F.3d 699. Pet. App. 50a-63a. The Memorandum Opinion and Order of the district court granting petitioner's motion for a new trial is not reported. Pet. App. 40a-44a. The Order of the district court granting petitioner's motion *in limine* is not reported. Pet. App. 45a-47a. The Amended Final Judgment of the district court that is the subject of this appeal is not reported. Pet. App. 48a-49a.

JURISDICTION

The Federal Circuit entered its judgment on June 25, 2013, and denied Commil's petition for rehearing *en banc* by an order entered on October 25, 2013. This Court has jurisdiction under 28 U.S.C. § 1254(1).

---

[1] References to "Pet App. __a" are to the appendix bound together with Commil's Petition; references to "J.A.__a" are to the Joint Appendix. References to "Fed. Cir. App. A____" are to the appendix filed in the Federal Circuit.

STATUTORY PROVISIONS INVOLVED

35 U.S.C. § 271(b) provides:

> (b) Whoever actively induces infringement of a patent shall be liable as an infringer.

35 U.S.C. § 282(a) provides:

> (a) In General. — A patent shall be presumed valid. Each claim of a patent (whether in independent, dependent, or multiple dependent form) shall be presumed valid independently of the validity of other claims; dependent or multiple dependent claims shall be presumed valid even though dependent upon an invalid claim. The burden of establishing invalidity of a patent or any claim thereof shall rest on the party asserting such invalidity.

INTRODUCTION

Under newly-penned Federal Circuit law, an alleged good-faith belief in invalidity can immunize an inducer of patent infringement from liability despite a defendant's admission that (1) the defendant knows of the patent; (2) the defendant openly encourages and facilitates conduct it reasonably and subjectively knows is within the scope of the patent's claims; (3) third parties infringe the patent at the defendant's direction; (4) the defendant's alleged good-faith belief is ultimately proved unfounded; and (5) the patent's validity is

upheld. Such a rule not only conflicts with this Court's jurisprudence and the text and policies underlying the Patent Act, but is also contrary to common sense. It encourages defendants to seek self-serving opinions of counsel in hopes of fabricating a defense to infringement. Furthermore, it undermines judicial economy by encouraging patentees to file multiple litigations against directly infringing customers—potentially in a multiplicity of jurisdictions—rather than focusing on the mastermind who induces the infringement. The application of this Court's precedent, the patent statute and its policies, and common sense leads to two simple conclusions. First, when an inducer knows of the patent and of the potential relevance of the patent to its activities (*e.g.*, through discussions with, or a notice letter from, the patentee), the inducer's "good-faith beliefs"—whether they relate to infringement, validity, or enforceability—are not relevant to the inducement analysis. Second, even if "good-faith beliefs" were relevant to the analysis, validity is distinct from infringement, and hence beliefs about validity are irrelevant to whether the defendant induced infringement.

STATEMENT OF THE CASE

A. Commil's Patent

Commil owns U.S. Patent No. 6,430,395 ("the '395 Patent"), which claims an improved way to implement a short-range wireless network. Pet. App. 77a-202a. Wireless networks enable computers and other electronic devices to communicate with each other without physical cables. A common

implementation of such technology is a wireless local area network ("WLAN") in which access points (also known as "base stations") are installed in an office. These networks are familiar to the public as "WiFi." When in range, laptops and other mobile devices can connect to the base stations and access the local network and, in many cases, the Internet. However, WiFi connections between base stations and mobile devices are short-range and require the user to stay relatively close to a base station. Network coverage of large areas requires multiple base stations, as shown in Figure 14A of the '395 Patent:

Figure 14A

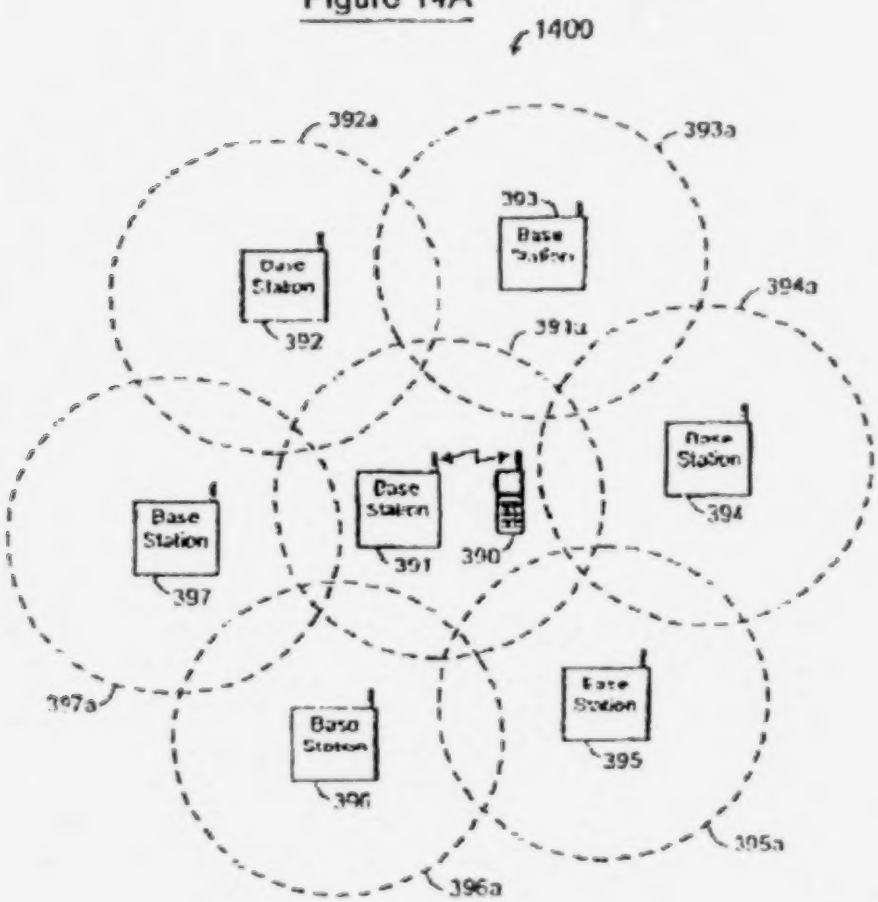

Pet. App. 94a.

Commil's invention is directed to wireless networks in areas that are too large to be covered by a single base station (*e.g.*, universities and large corporate buildings). The problem solved by the invention is how to manage "hand-offs" between different base stations that together provide wireless coverage over a large area. The claimed technique for managing handoffs enables the implementation of a wireless network that minimizes interference with the user's activities as the user moves throughout the network coverage area. As a result, users may roam seamlessly from one base station to another within the WLAN without disruptions.

The communication of data over a WLAN's wireless communication channel requires that transmitters and receivers employ a wireless communication protocol. Prior to Commil's invention, each base station independently handled the entire wireless communication protocol. A mobile device's transition from one base station to another (the "hand off") in such systems resulted in disruptions to the communications that could negatively affect the user's experience.

The '395 Patent inventors devised a novel way to implement short-range wireless networks to provide coordination between base stations and improve the speed and reliability of handoffs. Pet. App. 104a, 109a-10a, 123a-24a. Rather than using the old base stations that handle the entire communication protocol, the '395 invention provides a novel architecture that includes a new hardware device called a "switch" (also known as a "controller"), which is connected to and supports

multiple base stations, as shown in Figure 2 of the '395 Patent:

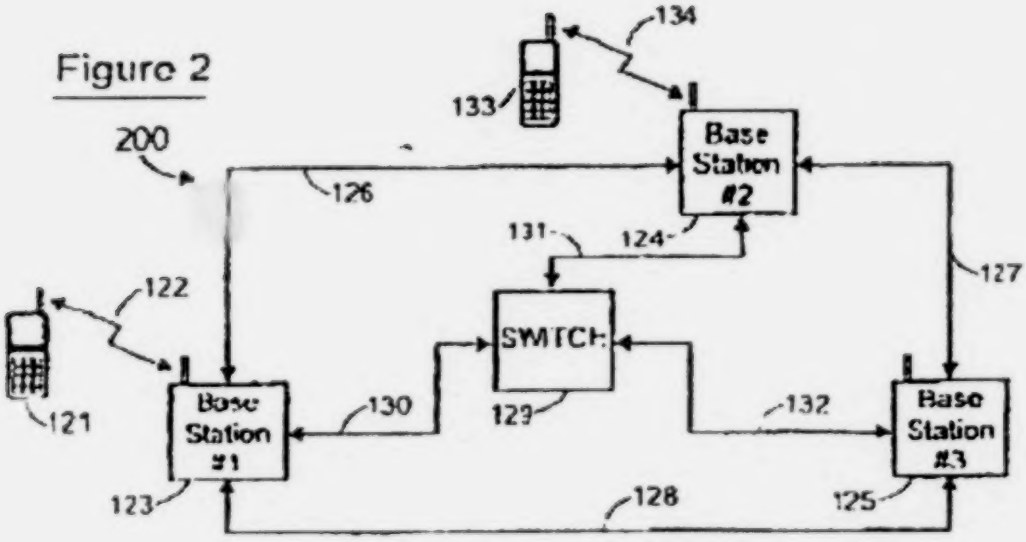

Pet. App. 80a (Figure 2). In this new architecture, the wireless communication protocol is divided into two parts, with certain protocol functionality (including functionality that is time-sensitive) performed at the base station and other functionality (including functionality that is not time-sensitive) performed at the switch. Pet. App. 138a-39a.

B. Cisco's Infringing Products

Cisco sells and assists customers with the installation of wireless networks. The Cisco products that are at issue in this case are access points and switches (collectively, the "Accused Products") that are used in a type of wireless network infrastructure that Cisco describes as "Split-MAC WLAN systems." J.A. 102a, 116a, 118a. Cisco originally acquired this line of Accused Products from a company called Airespace, which introduced its "split-MAC" concept

in 2002 (J.A. 156a), more than a year after the priority date of the '395 Patent (Pet. App. 77a). Airespace described the Accused Products using language that is strikingly similar to the language used in Commil's earlier-filed patent:

> Split-MAC WLAN systems ... split[] the processing of the 802.11 [WiFi] data and management protocols, as well as the AP [access point, a/k/a base station] functionality, between the AP and the WLAN switch or controller ... In the split-MAC approach, the AP handles the portions of the protocol that have realtime requirements ... All other functionality is handled in the WLAN switch/appliance, where time-sensitivity is not a concern ...

J.A. 118a-21a.

The asserted claims of the '395 Patent are method claims, which are directly infringed by Cisco's customers when the Accused Products are used. When operated, Cisco's Accused Products will necessarily infringe Commil's patent in their ordinary, "out-of-the-box" use. *See, e.g.*, J.A. 61a, 64a-66a, 69a-70a, 76a-79a. To implement a wireless network, Cisco's customers connect multiple base stations to a single controller. *Id.* A mobile device can connect to any one of the base stations. For each connection, the 802.11 wireless communication protocol will then be divided between the base stations, which "handle[] the portions of the protocol that have real time requirements" (J.A. 118a), and

the controllers, which perform other 802.11 functions "where time-sensitivity is not a concern" (J.A. 106a, 121a).

Shortly after acquiring Airespace, Cisco implemented a "migration plan" to move all customers from the older and non-infringing base stations to the infringing Accused Products. J.A. 62a-65a; Pet. App. 233a-35a; *see also* Fed. Cir. App. A15239. Cisco's sales team literature outlined a strategy for convincing customers to switch to the infringing lightweight technology. J.A. 62a; *see also* Fed. Cir. App. A15267. Indeed, Cisco's sales team was instructed to encourage future migration to the Accused Products even when customers resisted. *See* Fed. Cir. App. A15262, A15244-49. The Accused Products succeeded because of the infringing split-MAC architecture that Cisco overtly and intentionally influenced its customers to use. J.A.169a-70a.

C. Cisco's Knowledge of Commil's Patent

Commil Ltd, Commil USA's predecessor, spoke with a Cisco mergers and acquisitions manager several times in late 2004 or early 2005. J.A. 83a-86a. During these discussions, Commil Ltd's CEO told Cisco about Commil's technology and patents and explained that they "line[d] the core" of the Accused Products, which Cisco was at that time in the process of acquiring from Airespace. J.A. 87a-89a. At trial, one of the founders of Airespace (who joined Cisco after the acquisition) admitted that

Cisco knew about Commil's '395 Patent. Pet. App. 233a-234a.

D. Procedural History

i. Proceedings at the District Court

Commil filed the present lawsuit against Cisco in 2007. The district court had jurisdiction under 28 U.S.C. §§ 1331 and 1338(a). Because the claims of the '395 Patent recite a method that will be performed when the Accused Products are used, Commil asserted in the first trial that Cisco directly infringed the asserted claims under 35 U.S.C. § 271(a) when it used the Accused Products itself and induced its customers' infringement under 35 U.S.C. § 271(b) by selling the Accused Products and encouraging their use (which, as explained, necessarily results in direct infringement of the claimed method).

A first trial was held in May 2010. With respect to validity, Cisco's only invalidity defenses were based on an alleged failure to satisfy the written description and enablement requirements of 35 U.S.C. § 112; Cisco did not argue to the jury that the asserted claims were anticipated under 35 U.S.C. § 102 or obvious under 35 U.S.C. § 103. The jury returned a verdict that (1) Commil's patent was valid, (2) Cisco directly infringed through its own use of the Accused Products, (3) Cisco was not liable for inducement, and (4) Commil's damages were $3,726,207 (the exact amount presented by Cisco's damages expert). Pet. App. 4a-5a.

Throughout this trial, however, Cisco's counsel used religious references and played on stereotypes about Commil's owner and inventors, who are Jewish and reside in Israel. Pet. App. 13a-17a. Commil moved for a new trial on inducement and damages, which the district court granted. It found that Cisco's conduct "impliedly align[ed] Cisco's counsel's religious preference with that of the jurors and employ[ed] an 'us v. them' mentality—*i.e.*, 'we are Christian and they are Jewish.'" Pet. App. 43a. It also concluded that the verdict was "inconsistent with substantial justice." Pet. App. 44a.

During the second trial, Commil again demonstrated Cisco's customers directly infringe claims 1, 4, and 6 whenever the Accused Products were used in a customer's wireless network. J.A. 76a-77a, 64a-66a, 69a-70a. (The allegation of direct infringement against Cisco was not asserted in the second trial.) J.A. 14a-15a. Although the validity of the '395 Patent had been resolved in Commil's favor in the first trial and was no longer at issue, Cisco sought to introduce evidence challenging validity in the second trial under the theory that it allegedly showed Cisco's "good-faith belief" in the invalidity of the '395 Patent. Cisco argued that this alleged belief prevented it from having the intent required for inducing infringement. Commil filed a motion *in limine* to exclude this evidence as irrelevant to inducement under Federal Rule of Evidence 401 and, even if relevant, insufficiently probative and unfairly prejudicial under Federal Rule of Evidence 403. The district court granted Commil's motion. Pet. App. 46a, 206a.

At the close of the second trial, which occurred seven weeks prior to the issuance of this Court's opinion in *Global-Tech Appliances, Inc. v. SEB S.A.*, 131 S. Ct. 2060 (2011) ("*Global-Tech*"), the jury was given instructions on inducement that were based on those approved by the *en banc* Federal Circuit in *DSU Medical Corp. v. JMS Co.*, 471 F.3d 1293 (Fed. Cir. 2006). The jury returned a verdict that Cisco was liable for inducing the direct infringement of its customers and awarded damages of $63,791,153. Pet. App. 48a.

ii. Proceedings at the United States Patent & Trademark Office ("USPTO")

A month before the second trial began and after failing to prove invalidity in the first trial, Cisco requested that the USPTO reexamine the validity of Commil's '395 Patent in an *ex parte* reexamination proceeding. The USPTO granted Cisco's request and, after careful review of the prior art references which Cisco selected and argued to be invalidating, reconfirmed the validity of the asserted claims of the '395 Patent on November 29, 2011. J.A. 159a, 162a.

iii. Proceedings at the Federal Circuit

On appeal to the Federal Circuit (which had jurisdiction under 28 U.S.C. § 1295(a)(1)), Cisco challenged (among other issues) the district court's decision to prevent Cisco from presenting evidence that allegedly demonstrated the invalidity of the '395

Patent in order to argue, as a defense to inducement, that it had a good-faith belief that the patent was invalid.

Over a dissent by Judge Newman, the Federal Circuit panel concluded that the district court erred in the second trial by excluding Cisco's evidence concerning its alleged good-faith belief in the invalidity of Commil's patent. The panel majority acknowledged that its holding that "a good-faith belief of invalidity may negate the requisite intent for induced infringement" was new substantive law. Pet. App. 10a. The majority explained that it "s[aw] no principled distinction between a good-faith belief of invalidity and a good-faith belief of non-infringement for the purpose of whether a defendant possessed the specific intent to induce infringement of a patent." Pet. App. 11a. This was so, according to the majority, because "[i]t is axiomatic that one cannot infringe an invalid patent." *Id.* The panel also concluded that the jury instructions on inducement were erroneous because they were inconsistent with *Global-Tech*. Pet. App. 7a-8a. The panel further explained that to the extent the instructions would have been proper under pre-*Global-Tech* Federal Circuit law (such as *DSU*), such law was no longer good law. *Id.* The panel vacated the jury's infringement and damages determinations, affirmed the validity determinations, and remanded for a new trial on inducement and damages.

Commil filed a petition for rehearing *en banc*, which was denied over the dissent of five of the eleven participating judges. Pet. App. 50a-63a. Two dissenting opinions accompanied the denial—the

first authored by Judge Reyna (joined by Chief Judge Rader, Judge Newman, Judge Lourie, and Judge Wallach) and the second written by Judge Newman (joined by Chief Judge Rader, Judge Reyna, and Judge Wallach). These dissenting opinions explained that neither the Patent Statute, nor Federal Circuit precedent, nor *Global-Tech* provided a foundation for the majority's new means of absolving inducers of liability for their infringement of valid patents. Pet. App. 54a, 61a-62a.

SUMMARY OF THE ARGUMENT

A patentee is entitled to pursue a remedy against those who "actively induce[] infringement of a patent." 35 U.S.C. § 271(b). This case presents the question of whether a defendant may know about a patent, know that the patent is potentially relevant to its commercial activities, intentionally cause its customers to act in a manner that directly infringes the patent, and then avoid all liability because it subjectively—*but incorrectly*—believed that the patent was invalid. Cases in which the defendant's belief of invalidity was correct, of course, will never implicate this question, as in those cases the patent will be invalidated and a finding of invalidity moots the infringement question.

Resolving this dispute requires consideration of certain language from this Court's recent opinion in *Global-Tech*, which some defendants and courts have misinterpreted to mean that a patentee cannot prove the intent necessary to support an inducement finding without proving that the defendant analyzed

the patent and subjectively concluded that its conduct would lead to liability for patent infringement. Starting from this framework, Cisco and the Federal Circuit reasoned that if a defendant's subjective analysis resulted in a belief that the patent was invalid, it could not have had the necessary intent for inducement.

A careful reading of *Global-Tech* and the cases upon which it relied, however, establishes that the subjective beliefs of the defendants about the merits of the patentee's infringement claim are irrelevant. These cases show that for indirect infringement, the patentee must only prove that the defendant knew of the patent, knew of the patent's potential applicability to its conduct (*e.g.*, through a notice letter), and intended that their customers engage in the activity at issue.

This intent standard promotes the purpose of the statutory provision of liability for indirect infringement—namely, providing patentees with meaningful and practical recourse when the party most responsible for the infringement cannot practically be sued for direct infringement. Requiring patentees to prove the contents of the defendant's mind in order to succeed on an indirect infringement claim, as Cisco proposes, is a daunting prospect that risks effectively reading Section 271(b) out of the Patent Act. The complexity of patent litigation and the ease with which a defendant can acquire a self-serving opinion of counsel will make it difficult for patentees to prove that subjective beliefs about defenses were not held in good faith.

The particular defense that was allegedly held in good faith in this case was invalidity. Patents are entitled to a statutory presumption of validity and the challenger bears the burden to prove invalidity by clear and convincing evidence. Yet Cisco's proposed new defense would permit inducers to entirely disregard this presumption and attendant burden in favor of their own subjective belief, and by doing so avoid all liability for their inducement.

The new "good-faith belief" defense argued by Cisco and adopted by the Federal Circuit should be rejected because it conflicts with this Court's precedent, undermines the purpose and policies that led to the enactment of Section 271(b), and circumvents the statutory presumption of validity. Commil respectfully requests that this Court reverse the Federal Circuit's judgment on this issue.

ARGUMENT

I. Overview of the Intent Requirement for Inducement and the Nature of the Dispute Presented

Section 271(b) of Title 35 states "[w]hoever actively induces infringement of a patent shall be liable as an infringer." While "the text of § 271(b) makes no mention of intent," this Court held in *Global-Tech* that "at least some intent is required." *Global-Tech*, 131 S. Ct. at 2065, 2068.

The parties agree that the intent requirement for inducement requires proof that (1) the defendant had knowledge of the asserted patent, and (2) the

defendant intended to cause the third party acts that directly infringe that patent. The dispute in this case focuses on what, if anything, beyond those two points must be proved. According to Cisco, a patentee must also establish that the inducer possessed subjective "knowledge that the allegedly induced acts will give rise to *liability* for infringement of a *valid* patent," Cisco Fed. Cir. Reply Br. at 8, Fed. Cir. Docket Entry 40, June 1, 2012 (emphasis added). In other words, Cisco's position is that the patentee must delve into the mind of the defendant and present evidence that the defendant subjectively believed *not only* that its conduct was inducing infringement *but also* that no viable defense to liability (*e.g.*, invalidity or unenforceability) exists. The defense at issue here is invalidity, and Cisco asserts that a defendant that subjectively believes that the asserted patent is invalid lacks the intent necessary to be liable for inducement.

Commil disagrees with Cisco's interpretation of the intent requirement and contends that once the inducer has knowledge of the patent and its potential relevance to its conduct vis-à-vis infringement (*e.g.*, through discussion with the patent owner, a notice letter from a patentee, reading public materials, or internal review), the intent requirement is satisfied. Under this approach, the inducer's subjective beliefs regarding potential defenses are irrelevant. This includes any subjective beliefs about whether the patent may be invalid.

The proper interpretation of this Court's opinion in *Global-Tech* is at the forefront of this

dispute. That case presented the question of whether Section 271(b) requires knowledge of the patent-in-suit. *See* 131 S. Ct. at 2065 ("Pentalpha argues that active inducement liability under § 271(b) requires more than deliberate indifference to a known risk that the induced acts may violate an existing patent. Instead, Pentalpha maintains, actual knowledge of the patent is needed."). In answering that question, the Court explained:

> It would thus be strange to hold that *knowledge of the relevant patent* is needed under § 271(c) [for contributory infringement] but not under § 271(b). Accordingly, we now hold that induced infringement under § 271(b) requires *knowledge that the induced acts constitute patent infringement.*

Id. at 2068 (emphases added).[2] The second sentence, however, does not necessarily follow from the first sentence, as "knowledge of the relevant patent" and "knowledge that the induced acts constitute patent infringement" are not synonymous. For example, an individual might know of the patent but subjectively believe (rightly or wrongly) that its conduct is outside the patent's scope. The present dispute is fundamentally predicated on conflicting interpretations of what *Global-Tech*'s reference to "knowledge that the induced acts constitute patent infringement" means. *Id.* at 2068. A clear

---

[2] Compare "knowledge of *the existence of the patent* that is infringed," *Global-Tech*, 131 S. Ct. at 2068, with "knowledge that the induced acts *constitute patent infringement*," *id.*

understanding of Section 271(b)'s knowledge requirement is necessary to determine which subjective beliefs—if any—can negate that knowledge.

In the present case, the Federal Circuit based its determination of the relevance of a good-faith belief of invalidity on an interpretation of "knowledge that induced acts constitute patent infringement" that focuses on the defendant's subjective views about the merits of the patentee's infringement claim. Pet. App. 12a ("[O]ne could be aware of a patent and induce another to perform the steps of the patent claim, but have a good-faith belief that the patent is not valid. Under those circumstances, it can hardly be said that the alleged inducer intended to induce infringement."). A hint of this approach—in which even an irrational and unreasonable subjective belief can immunize an inducer from liability for infringement—first surfaced in the Federal Circuit's opinion in *DSU*, which held:

> Thus, on this record, the jury was well within the law to conclude that ITL did not induce JMS to infringe by purposefully and culpably encouraging JMS's infringement. *To the contrary, the record contains evidence that ITL did not believe its Platypus infringed. Therefore, it had no intent to infringe.* Accordingly, the record supports the jury's verdict based on the evidence showing a lack of the necessary specific intent.

471 F.3d at 1307 (emphasis added). Unsurprisingly, *DSU* quickly spawned cases in which inducers asserted that they could not have formed the requisite intent because they held a good-faith belief of non-infringement. *See, e.g.*, *Ecolab, Inc. v. FMC Corp.*, 569 F.3d 1335, 1351 (Fed. Cir. 2009); *Kinetic Concepts, Inc. v. Blue Sky Med. Group, Inc.*, 554 F.3d 1010, 1024-1025 (Fed. Cir. 2009).

The Federal Circuit's focus on the defendant's subjective beliefs about the merits, however, is inconsistent with a century of this Court's precedent including, most significantly, this Court's landmark opinion in *Aro Mfg. Co. v. Convertible Top Replacement Co.*, 377 U.S. 476 (1964) ("*Aro II*"). In that case, the Court treated receipt of a notice letter conveying the *patentee's* opinion that the defendant's conduct was contributing to infringement as conclusively establishing that the intent requirement was satisfied. 377 U.S. at 489-90. Nothing in *Aro II* attributed any significance to the defendant's subjective belief as to whether the patentee's opinion was correct. In *Global-Tech*, this Court held that "*Aro II* resolves the question in this case" and that it "compels the same knowledge for liability under § 271(b)." 131 S. Ct. at 2067.

Cisco will presumably argue that when this Court wrote in *Global-Tech* that "knowledge that the induced acts constitute patent infringement" was required, it held that the inducer must have subjective knowledge that liability for infringement would result. 131 S. Ct. at 2068. But that interpretation cannot be reconciled with *Aro II*, which similarly stated that contributory

infringement liability required knowledge that the third party's combination "was both patented and infringing" but then proceeded to hold that receipt of a notice letter from the patentee left no room for an intent-based defense. 377 U.S. at 488-90. As explained in additional detail below, *Aro II*, *Global-Tech*, and the earlier cases upon which they relied have consistently tied the intent requirement for indirect infringement to knowledge of the patent and its potential applicability to the conduct at issue—not to whether a defendant might subjectively believe in its ability to ultimately prevail on a defense to escape liability.

This Court's historical approach is the correct one, and the Federal Circuit's rejection of that approach in favor of an analysis tied to defendants' alleged subjective beliefs—including beliefs about topics unrelated to infringement, such as validity—is in error. Requiring patentees to disprove a defendant's alleged subjective views about the merits in order to prevail on an inducement claim is antithetical to the clearly expressed purpose of and policies underlying Section 271(b). Where, as here, the alleged "good-faith belief" relates to invalidity as opposed to infringement, it is also inconsistent with the statutory text, disregards the long-standing distinction between infringement and validity analyses, and offends the separate statutory presumption of validity. Commil respectfully requests that the Court reverse the Federal Circuit's holding that a good-faith belief in the invalidity of a patent can negate the intent requirement for inducement.

II. "Good-faith Belief" Defenses Are Irrelevant to the Intent Requirement for Inducement Under Section 271(b)

A. Supreme Court Precedent Correctly Establishes That "Good-faith Beliefs" Are Irrelevant to the Intent Requirement for Indirect Infringement

Global-Tech and the preceding cases upon which it relied uniformly held that the defendant's knowledge of the patent and knowledge of the patent's potential applicability to the defendant's activities was sufficient to satisfy the intent requirement. These cases do not support Cisco's view that a defendant's subjective-but-mistaken views about how liability might ultimately be avoided (*e.g.*, a belief regarding invalidity) could entirely defeat a patentee's otherwise meritorious indirect infringement claim.

This Court first addressed the intent requirement for 35 U.S.C. § 271(c) in *Aro II*. Section 271(c) covers the type of indirect infringement known as contributory infringement. The majority opinion concluded that Section 271(c) required "a showing that the alleged contributory infringer knew that the combination for which his component was especially designed was both patented and infringing." 377 U.S. at 488. Four justices dissented, expressing the view that "the knowledge Congress meant to require was simply knowledge that the component was especially designed for use in a combination and was not a staple article suitable for

substantial other use, and not knowledge that the combination was either patented or infringing." *Id.* at 488-89 n.8.

While the majority in *Aro II* held that the knowledge requirement extended beyond mere knowledge of the third party acts that happened to directly infringe, it expressly rejected the possibility that the intent requirement might serve to release an indirect infringer with knowledge of both the patent and the patentee's allegation of infringement. In that case, the patentee had sent a letter to the defendant on January 2, 1954 informing it of the patents and communicating the patentee's view that "anyone selling ready-made replacement fabrics for [certain] automobiles would be guilty of contributory infringement of said patents." 377 U.S. at 489-90. The *Aro II* Court held that "the Court's interpretation of the knowledge requirement affords [the defendant] *no defense* with respect to replacement-fabric sales made after January 2, 1954." *Id.* at 490-91 (emphasis added); *see also id.* at 514 (White, J., concurring) ("After the notice date, the knowledge requirement of § 271(c) was satisfied ..."). The Court's holding that *no* intent-based defenses were available to the defendant after notice was given necessarily establishes that whatever views about invalidity (or non-

infringement for that matter) the defendant may have had were irrelevant.[3]

Aro II was the primary support relied upon in the Court's *Global-Tech* opinion, where the Court expressly held that the "same knowledge" was required for both Sections 271(b) and (c). 131 S. Ct. at 2067-68. Like *Aro II*, the facts in *Global-Tech* and the Court's disposition are inconsistent with the notion that an inducer who possesses knowledge of a patent and its potential applicability to its activities can nevertheless raise a "good-faith belief" defense to inducement, whether premised on non-infringement or invalidity.

In *Global-Tech*, this Court affirmed the jury's finding of inducement liability where the defendant indisputably lacked actual knowledge of the asserted patent but willfully blinded itself to the patent's existence. 131 S. Ct. at 2072. The Court did so because the defendant copied an overseas model of the patentee's product and then declined to inform its patent attorney of that critical fact when it commissioned a right-to-use opinion. *Id.* at 2071. The Court found it unnecessary to consider potential defenses that the defendant may have raised in good

---

[3] Any suggestion that the Court may not have contemplated the possibility of invalidity or that the defendant may have thought the patent was invalid does not withstand scrutiny. Validity was challenged at the district and appellate courts in *Aro I* and, although ultimately affirmed, Justice Black noted in his dissenting opinion in *Aro II* that he had discussed "the doubtful validity of this combination patent" in *Aro I*. *See id.* at 523 n.6; *see also Aro Mfg. Co. v. Convertible Top Replacement Co.*, 365 U.S. 336, 338 (1961) ("*Aro I*").

faith, such as the state of deep fryer art and the extent to which the features of the patentee's fryer were sufficiently novel and non-obvious over that art to support patentability. Instead, the Court held that the defendant's willful blindness to the *existence* of a relevant patent "was plainly sufficient to support a finding of [the requisite knowledge]." *Id.* at 2068.[4]

Early cases from this Court also support the proposition that subjective beliefs about defenses cannot negate the intent required for indirect infringement. In *Henry v. A.B. Dick Co.*, which was also relied upon by *Global-Tech*, the defendant was alleged to have committed contributory infringement by selling a can of ink for use in a patented mimeograph with knowledge that the purchaser's license to use the mimeograph was limited to use only with ink purchased from the patentee. 224 U.S. 1, 11-12 (1912). As in *Aro II* and *Global-Tech*, the Court's intent analysis focused on the defendant's knowledge of the existence of the patent and its potential applicability to the conduct alleged to give rise to the infringement, rather than on the

---

[4] Crediting Cisco's "good-faith belief in invalidity" defense would lead to the odd result of making it is *easier* to satisfy the intent requirement for inducement where the defendant lacks actual knowledge of the patent (like *Global-Tech*). In those situations, the defendant could not possibly have subjective beliefs about invalidity because it would by definition never have examined the patent and its claims to devise such a defense. In contrast, a patentee that put the alleged inducer on notice (as Commil did, *supra* at 8-9) would as a result be required to prove that the inducer's defenses were not held in good faith, making it significantly *more difficult* to satisfy the intent requirement.

defendant's subjective view of the strength of its defenses.

In *Henry*, the Court addressed at length two issues raised by the defendants that would have eliminated the defendants' liability for contributory patent infringement: (1) whether the plaintiff's remedy was limited to breach of contract against the customer (as opposed to patent infringement), which would have eliminated the cause of action against the defendant for contributory infringement and deprived the federal courts of jurisdiction for lack of a federal question (224 U.S. at 12-16); and (2) whether the patentee's restriction limiting the patent license to use with the patentee's ink was valid and, if violated, resulted in direct infringement by the customer (*id.* at 17-47). After rejecting the defendants' position on both points (over the dissent of three justices), and without mentioning the question of patent validity, the Court held that the defendants were liable for contributory infringement because they "made a direct sale to the user of the patented article, with knowledge that under the license from the patentee she could not use the ink, sold by them directly to her, in connection with the licensed machine, without infringement of the monopoly of the patent." *Id.* at 49; *see also id.* at 33 ("But if the defendants *knew of the patent* and that she had unlawfully made the patented article, and then sold her ink or other supplies without which she could not operate the machine, *with the intent and purpose that she should use the infringing article by means of the ink supplied by them*, they would assist in her infringing use." (emphases added)).

The *Henry* Court thereby concluded that the intent requirement for contributory infringement was satisfied even though the defendants allegedly subjectively believed that (1) the customer's use was at most a violation of a contractual agreement, not patent infringement; and (2) that the contractual agreement was unlawful and therefore without effect. The "reasonableness" or "good faith" of the defendants' position on the second point is essentially beyond question, as three justices dissented at the time and the portion of the *Henry* opinion giving effect to the contractual agreement was overruled just six years later. *See Motion Picture Patents Co. v. Universal Film Mfg. Co.*, 243 U.S. 502, 518 (1917). *Henry*, like *Aro II* and *Global-Tech*, further supports the proposition that subjective beliefs about potentially successful defenses are irrelevant if the alleged indirect infringer has knowledge of the patent and its potential applicability to the defendant's conduct.

This Court's opinion in *Cortelyou v. Charles Eneu Johnson & Co.* (also cited by *Global-Tech*) is contrary to [illegible]co's proposed new defense as well. In that case, the Circuit Court reversed a finding of indirect infringement premised on the defendant selling ink to customers who then used the ink in patented Neostyle duplicating machines that were sold subject to a license requiring use only with supplies purchased from Neostyle. 207 U.S. 196, 198-99 (1907). The basis of the Circuit Court's decision was that "the evidence was not sufficient to show that the defendant had notice that the machines for which the ink was ordered had been sold under any restrictions ...." *Id.* at 199. This

Court affirmed because there was no evidence that "[the defendant] ever solicited an order for ink to be so used, that it was ever notified by the plaintiffs of the rights which they claimed, or that anything which it did was considered by them an infringement upon those rights." *Id.* at 200. Again, the focus of the intent requirement as it pertained to knowledge of infringement was on whether there was notice of the patent and the allegation of infringement, not on whether the defendant may have subjectively believed it had defenses to liability.

These cases directly undercut Cisco's argument that a good-faith belief in invalidity (or other means by which to escape liability) can defeat an inducement charge. If a defendant's subjective belief that it has a successful defense to liability were sufficient to negate the intent requirement for indirect infringement, the prior defendants in *Aro II* and *Henry* should not have been liable because both presumably subjectively believed in their defenses. After all, they pressed them at the trial court, on appeal, and then to this Court, where the defenses were deemed sufficiently interesting to warrant granting *certiorari*.

As these cases show, the knowledge required for indirect infringement is satisfied where the defendant has knowledge of the patent's existence and its potential applicability to the conduct at issue. As explained below, this knowledge requirement properly balances the policy interests underlying 35 U.S.C. §§ 271(b) and (c). The defendant's alleged subjective beliefs about the invalidity of the patent are simply irrelevant.

In the present case, the evidence credited by the jury established that Commil Ltd's CEO communicated to Cisco that Commil had patents that "line[d] the core" of the Accused Products, and Cisco's witness admitted Cisco knew of Commil's patent. *Supra* at 8-9. With such knowledge, Cisco's subjective belief about invalidity "affords ... no defense." *Aro II*, 377 U.S. at 490.

B. "Good-faith Belief" Defenses Are Contrary to the Purpose and Policies Underlying 35 U.S.C. §§ 271(b) and (c)

Principles of indirect infringement were developed in the common law and codified as part of the 1952 Patent Act. The purpose of the doctrine is to provide patent holders with a remedy against the party responsible for causing the infringement where the direct infringers themselves are undesirable parties to litigation. One common scenario is where the direct infringers are too numerous and diffuse for practical litigation. Another is where the direct infringers are simply using a purchased product for its intended purpose but lack sufficient understanding of its operation to be reasonably called to account for the infringement.

In light of concerns about imposing liability upon suppliers merely for providing unpatented items that customers might use to infringe, a scienter requirement has been adopted. By limiting liability where the supplier is unaware of the patent or has no intent or expectation as to how its customers may use its products, the intent

requirement helps ensure that suppliers will not remove beneficial products with substantial non-infringing uses from the market simply for fear of indirect infringement liability.

Under prevailing law, there are two components of the inducement intent test that are undisputed in this case: (1) the inducer must have knowledge of the patent; and (2) the inducer must intend to cause the third party acts that directly infringe. These two parts of the test amply protect innocent suppliers from unexpected indirect infringement liability. Requiring the patentee to *also* establish that the inducer subjectively believed that it had no defenses to an indirect infringement claim, as Cisco requests, will impose a burden of proof so onerous that it will effectively deprive patentees of the avenue for relief provided by Section 271(b). At the same time, "good-faith belief" defenses will not promote any of the recognized policies underlying the scienter requirement. Because Cisco's proposed new defense undermines the purpose of indirect infringement without providing any countervailing policy benefits, it should be rejected.

i. Congress Enacted 35 U.S.C. §§ 271(b) and (c) to Provide Patent Owners With A Remedy For Infringement Where Enforcement Against Direct Infringers is Impracticable

The House and Senate committee reports explained that the purpose of the indirect

infringement provisions of 35 U.S.C. § 271 was to codify "the doctrine of contributory infringement," which "ha[d] been part of our law for about 80 years." H.R. Rep. No. 1923 on H.R. 7794, 82d Cong., 2d Sess., at 9; *see also* Senate Rep. No. 82-1979 on H.R. 7794. The reports further elaborated upon the purpose of the indirect infringement provisions:

> [Contributory infringement] has been applied to enjoin those who sought to cause infringement by supplying someone else with the means and directions for infringing a patent. One who makes a special device constituting the heart of a patented machine and supplies it to others with directions (specific or implied) to complete the machine is obviously appropriating the benefit of the patented invention. It is for this reason that the doctrine of contributory infringement, which prevents appropriating another man's patented invention, has been characterized as "an expression of both law and morals."

Id.

The importance of providing patent owners with a meaningful remedy against those who induce third parties to directly infringe, rather than requiring the patent owner to file suit against the direct infringers themselves, has long been recognized by both courts and commentators. In *Aro II*, this Court explained that the purpose of 35 U.S.C.

§ 271(c) was "to provide for the protection of patent rights where enforcement against direct infringers is impracticable." 377 U.S. at 511 (quoting H.R. 5988, 80th Cong., 2d Sess.; H.R. 3866, 81st Cong., 1st Sess.); *see also, e.g.*, 5-17 Chisum on Patents § 17.04[4][f] ("A patent owner's ability to prevent active inducement by advertising and instruction or other activity is often critical to obtaining effective protection for a patented invention consisting of a new method of use of a known, staple product ....").

This purpose was also articulated during the drafting and consideration of the 1952 Patent Act. Mr. Giles Rich[5] explained:

> [w]here a patent is being infringed by a large number of scattered individuals all of whom have been caused to infringe by the same person, the practical way to stop the infringement is to sue the man who caused the infringement, rather than the multitude of persons who are infringing.

Contributory Infringement in Patents–Definition of Invention: Hearings on H.R. 5988 before the

---

[5] Giles Rich was "one of the main drafters" of the 1952 Patent Act. *Bilski v. Kappos*, 130 S. Ct. 3218, 3247-48 (2010). In 1956, he was appointed as judge of the Court of Customs and Patent Appeals (which later became the Court of Appeals for the Federal Circuit), where he served as an active judge until his death at age 95. Richard A. Oppel, Jr., *Giles S. Rich, Oldest Active Federal Judge, Dies at 95*, N.Y. Times, June 12, 1999, *available at* http://www.nytimes.com/1999/06/12/business/giles-s-rich-oldest-active-federal-judge-dies-at-95.html.

Subcomm. on Patents, Trademarks, & Copyrights of the H. Comm. on the Judiciary, 80th Cong., 2nd Sess., ser. 21, at 3 (1948) (statement of Giles S. Rich).

Mr. Rich also explained how common it was for indirect infringement to serve as the preferred remedy:

> [R]emember this: there may be twenty or thirty percent of all the patents that are granted that cannot practically be enforced against direct infringers because of the nature of the invention and the way it is claimed in the patent.
>
> Like this dental compound,[6] it is simply not feasible to go around the country suing every dentist who buys a package of this stuff, and the practical way to give the patentee some way to enforce this patent right that he has been given is to let him go after the brains of the enterprise, the person who is really

---

[6] Mr. Rich was referring to an example of a claim directed to a compound used for making dental impressions that comprised a combination of various chemicals with water. Statement of Giles Rich, Hearings before Subcommittee No. 3 of House Judiciary Committee on H.R. 3760, 82d Cong., 1st Sess., at 154-155. In this example, individual dentists committed the direct infringement by purchasing prepackaged dry chemicals from a dental supply company (which would not directly infringe because the claims required water) and then combining them with water.

> responsible and not the innocent end user.

Statement of Giles Rich, Hearings before Subcommittee No. 3 of House Judiciary Committee on H.R. 3760, 82d Cong., 1st Sess., at 160; *see also Aro II*, 377 U.S. at 511 n.23 (citing additional authority). Section 271(b) was thus enacted to "hold liable the mastermind who plans the whole infringement." Giles S. Rich, Address Before the N.Y. Pat. Law Ass'n (Nov. 6, 1952), *reprinted in* 3 J. FED. CIR. HIST. SOC'Y 103, 113 (2009).

Providing a remedy for indirect infringement also serves a related purpose of avoiding multiple lawsuits against customers who exist in large numbers in different forums but merely use a device they purchased without any real understanding of how it works. Cisco itself has recognized this and has been highly critical of a patentee that filed infringement suits against Cisco's customers based on their use of Cisco WiFi products. *See In re Innovatio IP Ventures, LLC, Patent Litigation*, No. 1:11-cv-9308, Dkt. No. 233 (N.D. Ill. May 16, 2012). As Cisco explained, a suit against the manufacturer is preferable to a series of suits against customers that simply use the manufacturer's product for its ordinary use because (1) the manufacturers "are the real parties in interest" (*id.* at 3); (2) end-users may "have no real knowledge of the accused products" and therefore will be "the least capable of understanding and defending the accused technologies" (*id.*); (3) the manufacturers are "in the best position to defend the technology at issue" (*id.* at 4); and (4) resolution of an indirect infringement

claim against the manufacturer can globally resolve the infringement question for all customers' use of the products rather than requiring piecemeal and individualized trials against each customer (*id.* at 19).

Accordingly, providing a remedy for indirect infringement in Sections 271(b) and (c) serves two important purposes: (1) it provides patent owners with a reasonable means of enforcing their patents where it would be inefficient and impractical to sue a large number of direct infringers; and (2) it allows patent owners to seek their remedy from the real party in interest rather than dragging a large number of customers who simply use the defendants' products into patent litigation.

ii. The Purposes of the Knowledge/Intent Requirement for Indirect Infringement

The case law explains that the scienter requirement for inducement flows from two primary considerations.

First, there has been a reluctance to permit the owner of a patent on a particular device to control the market for unpatented staple items of commerce. For example, it would be undesirable to permit a patentee with a patent on a printer to also control the market for unpatented ink simply because some customers might use the ink in an unlicensed printer. *See, e.g., Cortelyou*, 207 U.S. at 198-200. The same principle was recognized in *Individual Drinking Cup Co. v. Errett*, 297 F. 733,

739 (2d Cir. 1924), which addressed an indirect infringement claim based on the sale of paper cups that might be used in an infringing dispenser, a non-infringing dispenser, or no dispenser at all.

Second, courts have expressed an unwillingness to impose liability on the seller of a product that is equally capable of infringing or non-infringing use where the seller has not encouraged or promoted the infringing use. *See, e.g.*, *Henry*, 224 U.S. at 48 ("Undoubtedly a bare supposition that by a sale of an article which though adapted to an infringing use is also adapted to other and lawful uses, is not enough to make the seller a contributory infringer."); *Metro-Goldwyn-Mayer Studios, Inc. v. Grokster, Ltd.*, 545 U.S. 913, 932-33 (2005) ("[T]he doctrine absolves the equivocal conduct of selling an item with substantial lawful as well as unlawful uses, and limits liability to instances of more acute fault than the mere understanding that some of one's products will be misused."). In these cases, the concern is that imposing liability on the seller of a product with substantial non-infringing uses simply because some customers will "misuse" those products to infringe will result in the seller ceasing all sales, and thereby depriving the public of the opportunity to benefit from the non-infringing uses. *Sony Corp. of Am. v. Universal City Studios, Inc.*, 464 U.S. 417, 440-42 (1984).

iii. "Good-Faith Belief" Defenses Undermine the Purposes and Policies Underlying 35 U.S.C. §§ 271(b) and (c)

Creating a new good-faith belief in invalidity defense to inducement will dramatically weaken patent owners' ability to pursue their statutory rights against indirect infringement without advancing any of the aforementioned policies underlying the enactment of Sections 271(b) and (c) or the judicially recognized knowledge and intent requirement.

a. "Good-faith belief" defenses would deprive patentees of their statutory remedy for infringement of valid patents

"Good-faith belief" defenses such as a good faith belief in invalidity will *only* affect the ultimate outcome when the alleged belief was *wrong* and the patent is in fact held valid and directly infringed, and the defendant also knew of the patent and intended to cause the direct infringers' infringing acts. In other words, if the defendant is correct in its belief about a defense such as invalidity, there will be no liability because a finding of invalidity is a complete defense. *See, e.g.*, 35 U.S.C. §§ 282(b)(2)-(3). The only legal effect will be to deprive owners of valid and infringed patents of a remedy under 35 U.S.C. § 271(b). This would be inconsistent with the well-recognized purpose of indirect infringement.

b. "Good-faith belief" defenses will inject tremendous uncertainty into the merits of inducement claims and dramatically weaken patentees' rights under 35 U.S.C. § 271(b)

Requiring the patentee to prove that a defendant's alleged good-faith belief in a defense was not actually held in good faith is an extraordinarily onerous requirement. A patentee will rarely, if ever, have access to direct and candid evidence of a defendant's subjective knowledge about the weakness of its defenses because even if written down (an unlikely event in the first instance), such views would generally be protected by attorney-client privilege or the work product doctrine.

Even in cases in which the defendant elects to waive privilege, Cisco's proposed rule would encourage defendants to solicit self-serving opinions of counsel—even facially unreasonable ones—and discourage them from seeking unbiased opinions on the merits of their defenses. *Cf. Jerman v. Carlisle, McNellie, Rini, Kramer & Ulrich, L.P.A.*, 559 U.S. 573, 577, 602 (2010) (criticizing a legal standard that would enable violators to "obtain blanket immunity for mistaken interpretations of the [Fair Debt Collection Practices Act] simply by seeking the advice of legal counsel"). Indeed, cases since *Global-Tech* have suggested that summary judgment of no inducement may be appropriate based solely on the defendant's reliance on an opinion of counsel

expressing the view that the asserted patent was invalid. *Bose Corp. v. SDI Techs., Inc.*, 558 Fed. Appx. 1012, 1024 (Fed. Cir. 2014) (non-precedential) (holding that "an invalidity opinion of counsel" coupled with "unquestionable proof of good-faith reliance" would "support a summary judgment of no indirect infringement"); *Oplus Techs., Ltd. v. Sears Holdings Corp.*, No. 2:12-cv-05707, 2013 U.S. Dist. LEXIS 145917, at *22 (C.D. Cal. Oct. 2, 2013) (granting summary judgment of no inducement based in part on the defendant's subjective belief that the asserted patents were invalid).

The burden of uncertainty placed on patentees seeking a remedy for inducement is exacerbated by the lack of clarity in the Federal Circuit's opinion about how evidence of a good-faith belief in invalidity should even factor into the jury's consideration of the intent requirement. The majority opinion first writes: "We now hold that evidence of an accused inducer's good-faith belief of invalidity may negate the requisite intent for induced infringement." Pet. App. 12a-13a. In a footnote accompanying this sentence, the majority then says that it "certainly do[es] not hold 'that if the inducer of infringement believes in good faith that the patent is invalid, there can be no liability for induced infringement.'" Pet. App. 13a. These two statements are in tension with one another: if "an accused inducer's good-faith belief of invalidity may negate the requisite intent for inducement," it is unclear how a patentee could ever succeed in establishing liability for induced infringement where "the inducer of infringement believes in good faith that the patent is invalid." *See id.*

If the Federal Circuit opinion stands, every accused inducer will argue to the jury that even if the patent is valid, it cannot be found liable because it thought the patent was invalid. One need not look further than the facts of the present case to appreciate how aggressively this defense will be asserted by inducers to diminish the rights of patent holders. In this case, Cisco's invalidity defenses (limited to lack of enablement and written description support) were presented to the jury in the first trial. The jury rejected them and found the '395 Patent valid, and the Federal Circuit affirmed that conclusion. *Supra* at 9, 12. In parallel with the district court litigation, Cisco also requested *ex parte* reexamination of the '395 Patent, where the USPTO again confirmed the validity of Commil's patent. *Supra* at 11. Yet after this extensive consideration of the validity of the '395 Patent, Cisco seeks the opportunity to avoid *all liability* for inducing infringement by showing that, notwithstanding all of this, its mistaken belief that the '395 Patent is invalid was held in good faith.

A "good-faith belief in invalidity" defense is particularly problematic for patent holders because it potentially enables inducers to leverage the mere *institution* of USPTO post-grant proceedings into a complete bar on liability *even where the USPTO confirms the validity of the patent in question after review.* By statute, the USPTO will institute reexamination if it finds that the petition has raised a "substantial new question of patentability." 35 U.S.C. § 304. For *inter partes* review, the standard for institution is whether "there is a reasonable

likelihood that the petitioner would prevail with respect to at least 1 of the claims challenged in the petition." 35 U.S.C. § 314(a).

Defendants have already argued that a USPTO post-grant institution decision alone provides a complete defense to inducement because it conclusively establishes the reasonableness and good-faith nature of their subjective beliefs about the invalidity arguments raised in the post-grant review petition regardless of whether the patent is ultimately found patentable. *See, e.g., Ultratec, Inc. v. Sorenson Communs., Inc.*, No. 13-cv-346, 2014 U.S. Dist. LEXIS 120134, at *112 (W.D. Wis. Aug. 28, 2014) ("Pointing again to the board's grant of *inter partes* review, defendants argue that their invalidity defenses are objectively reasonable and preclude a finding of induced infringement . "). Cisco will presumably take this position at the next trial if it is successful in establishing this new defense. It will be challenging for a patentee to overcome such an argument in front of a jury. *Id.* at *113 ("As for the period after the [USPTO] board issued its decisions, it is difficult to argue that defendants did not hold a good-faith belief that the patents for which the board granted review would be found invalid."). And again, the only patentees harmed by this will be those like Commil with patents that are actually valid and survive the USPTO's post-issuance review.

Finally, while this case is focused on an alleged good-faith belief in the defense of invalidity, the starting point of Cisco's argument is that a defendant lacks the requisite intent under 35 U.S.C.

§ 271(b) unless it has knowledge of and intends to "give rise to *liability* for infringement of a *valid* patent." Cisco Fed. Cir. Reply Br. at 8, Fed. Cir. Docket Entry 40, June 1, 2012 (emphasis added). As explained, permitting a defendant to avoid liability if it can merely convince a jury that it had a subjective belief that the patent was invalid would make the patentee's burden to obtain a remedy for infringement of a valid patent under Section 271(b) far too onerous in many cases. If a good-faith belief in *any* defense to liability would suffice, the subsection would be effectively removed from the Patent Act.

In essentially every patent case, the defendant asserts a slew of defenses including non-infringement, multiple grounds of invalidity (*e.g.*, anticipation, obviousness, indefiniteness, lack of enablement, lack of written description), and various equitable defenses (*e.g.*, laches, equitable estoppel). In fact, Cisco raised *all* of the defenses identified in the preceding sentence in its answer in this case. *See Commil USA, LLC v. Cisco Sys., Inc.*, No. 2:07-cv-341, Dkt. No. 42, at 10, (E.D. Tex. Nov. 30, 2007). Compliance with Federal Rule of Civil Procedure 11(b) required that Cisco's attorneys subjectively believed in good faith that all of these defenses were "warranted by existing law or by a nonfrivolous argument for extending, modifying, or reversing existing law or for establishing new law"—*i.e.*, a good-faith belief that the defense might be meritorious. Needless to say, if formation of a Rule 11 basis to raise a defense is sufficient to negate the intent requirement for inducement, claims under Section 271(b) will not be viable.

c. "Good-faith belief" defenses will discourage lawsuits against manufacturers and encourage inefficient and undesirable lawsuits against their individual customers

One of the express purposes of providing a remedy for indirect infringement is to give patentees an alternative to pursuing the direct infringers in circumstances where such suits are viewed as undesirable, such as where customers are simply using a manufacturer's product for its intended use and lack technical understanding and legal sophistication, or where the judicial system would be burdened by scores of separate lawsuits against a manufacturer's customers. *Supra* at 29-34. The extreme difficulties for patentees presented by a "good-faith belief in invalidity" defense (*supra* at 37-41), however, will create a powerful incentive for patentees to sue the direct infringers under Section 271(a) instead of the inducing manufacturer under Section 271(b).

This case provides a salient example. As noted previously, Cisco has itself explained that it—and not one of its customers—is the better patent infringement defendant where the infringement is based on use of its equipment because Cisco is more technically and legally sophisticated, and a case against Cisco can resolve the patent issues as to the entire product line in a single case. *Supra* at 33-34. In the present case, Commil pursued its remedy

against Cisco rather than a large number of Cisco's customers because the Accused Products will necessarily infringe the asserted method claims when put into ordinary operation. *Supra* at 7-8. Yet if Cisco succeeds in establishing this new defense, Commil faces the very real possibility that Cisco will be completely released from liability at a third trial based on its alleged and thrice-rejected subjective belief that the '395 Patent was invalid. *Supra* at 9, 11-12.

This possibility will loom large for all patentees considering whether to pursue their remedy for infringement against the manufacturer under Section 271(b) or a larger number of customers under Section 271(a).

d. "Good-faith belief" defenses will not advance the policy in favor of protecting the public's right to non-infringing uses of technology

As noted above, the intent requirement has been used to balance the public's access to non-infringing uses of products against the patent owner's right to a remedy when the use is infringing. *Supra* at 34-35. Creating a good-faith belief in invalidity defense does nothing to further this policy. Again, Cisco's proposed new defense applies only when the validity of the patent is ultimately upheld and the patent has been found to have been directly infringed by customers. *Supra* at 36. The separate

and complete defense of invalidity protects the public's right to use technologies that are unpatentable. 35 U.S.C. §§ 282(b)(2)-(3). And the separate and complete defense of no direct infringement by customers protects the public's right to use unpatented technologies.

III. Even if a "Good-faith Belief" in Non-Infringement Were Relevant to Section 271(b), a "Good-faith Belief" in Invalidity is Not

Section 271(b) provides that "[w]hoever actively induces *infringement* of a patent shall be liable as an infringer." (emphasis added.) The statutory text, organization of Title 35, and long-standing precedent establish that infringement and validity are separate and distinct legal issues that are to be determined independently. There is no basis for importing consideration of *validity* into the Section 271(b) analysis of "induc[ing] *infringement*."

A. The Patent Act Treats Infringement and Validity as Separate Issues

The Patent Act demonstrates that infringement and validity are distinct concepts. Title 35 of the United States Code is divided into several parts. Part III of Title 35 relates to the "protection of patent rights," and is divided into two distinct chapters. First, Chapter 28 is entitled "Infringement of Patents," and includes Section 271, entitled "Infringement of patent." In this section, Congress defined what it means to "infringe" a patent.

Second, Chapter 29 is entitled "Remedies for Infringement of a Patent, and other Actions," and encompasses the sections that provide defenses to liability for infringement. Section 282 of Chapter 29 pertains to "defenses," and specifically enumerates the invalidity-based defenses:

> (2) Invalidity of the patent or any claim in suit on any ground specified in part II as a condition for patentability.
>
> (3) Invalidity of the patent or any claim in suit for failure to comply with—
>
> (A) any requirement of section 112, except that the failure to disclose the best mode shall not be a basis on which any claim of a patent may be canceled or held invalid or otherwise unenforceable; or
>
> (B) any requirement of section 251.

35 U.S.C. §§ 282(b)(2)-(3).

By separately defining infringement, invalidity, and the statutory requirements for both, Congress indicated that the two are separate issues. If a patentee establishes infringement under Section 271(b), the infringer can raise an invalidity defense and thereby avoid liability.

B. Case Law Recognizes Infringement and Validity as Separate Issues

Precedent has long recognized that the legal test for infringement and that for invalidity are separate, and the issue of infringement is "capable of determination without regard to its validity." *Medtronic, Inc. v. Cardiac Pacemakers, Inc.*, 721 F.2d 1563, 1582-83 (Fed. Cir. 1983). To determine infringement, the asserted patent claims (as construed by the court) are compared to the accused products to determine whether "the patent claim 'covers the alleged infringer's product or process.'" *Markman v. Westview Instruments*, 517 U.S. 370, 374 (1996). Validity, on the other hand, is governed by different legal tests that are individually defined for the various invalidity theories available under Sections 101, 102, 103, or 112. *See, e.g., Nautilus, Inc. v. Biosig Instruments, Inc.*, 134 S. Ct. 2120, 2129 (2014) (Section 112 requires "a patent's claims, viewed in light of the specification and prosecution history, inform those skilled in the art about the scope of the invention with reasonable certainty."); *Mayo Collaborative Servs. v. Prometheus Labs., Inc.*, 132 S. Ct. 1289, 1297-98 (2012) (Section 101 requires consideration of the elements of each claim both individually and "as an ordered combination" to determine whether the additional elements "transform the nature of the claim" into a patent-eligible application).

Long before the present case, Judge Giles Rich[7] explained that infringement and validity are

---

[7] *Supra* at 31 n.5.

separate issues that should be separately determined:

> Validity and infringement are unrelated questions. Invalid claims can perfectly well be infringed, which is simply a matter of construing the words of the claim and then determining whether they can be read on the accused structure. Courts constantly hold claims infringed but invalid. Validity *vel non* should have no effect on how the infringement issue is decided.

Unique Concepts, Inc. v. Brown, 939 F.2d 1558, 1565 (Fed. Cir. 1991) (Rich, J., dissenting). This reasoning is found in Federal Circuit opinions throughout its existence, because that court

> has long recognized that patent infringement and invalidity are separate and distinct issues. "Though an invalid claim cannot give rise to liability for infringement, whether it is infringed is an entirely separate question capable of determination without regard to its validity."

Pandrol USA, LP v. Airboss Ry. Prods., Inc., 320 F.3d 1354, 1365 (Fed. Cir. 2003) (quoting *Medtronic, Inc. v. Cardiac Pacemakers, Inc.*, 721 F.2d 1563, 1383 (Fed. Cir. 1983)); *see also Lazare Kaplan Int'l, Inc. v. Photoscribe Techs., Inc.*, 714 F.3d 1289, 1295 (Fed. Cir. 2013) ("Indeed, no accused products can be found liable for infringement of an invalid claim.");

Exergen Corp. v. Wal-Mart Stores, Inc., 575 F.3d 1312, 1320 (Fed. Cir. 2009) ("[B]ecause 'invalid claim[s] cannot give rise to liability for infringement,' SAAT cannot be liable for infringement of this patent."); *Spectra-Physics, Inc. v. Coherent, Inc.*, 827 F.2d 1524, 1535 (Fed. Cir. 1987) (describing the statement that "invalid claims cannot be infringed" as "a nonsense statement"); *Connell v. Sears, Roebuck & Co.*, 722 F.2d 1542, 1550 (Fed. Cir. 1983) ("Acting in the interest of judicial economy, the trial court proceeded to decide, correctly, the infringement issue, while fully recognizing that infringement of an invalid patent can create no legal liability."). In accordance with this framework, juries have routinely found claims infringed, but invalid, thereby precluding liability for patent infringement. *See, e.g., CEATS, Inc. v. Cont'l Airlines, Inc.*, 755 F.3d 1356, 1357-58 (Fed. Cir. 2014) ("[T]he case went to trial where a jury found that CEATS's patents were infringed, but invalid.").

Contrary to this precedent, the Federal Circuit majority opinion in *Commil* stated that "[i]t is axiomatic that one cannot infringe an invalid patent," citing *Richdel, Inc. v. Sunspool Corp.*, 714 F.2d 1573, 1580 (Fed. Cir. 1983) and *Prima Tek II, L.L.C. v. Polypap S.A.R.L.*, 412 F.3d 1284, 1291 (Fed. Cir. 2005). In *Richdel*, the Federal Circuit affirmed the trial court's finding that the patent was invalid as obvious and then stated without explanation: "[t]he claim being invalid there is nothing to be infringed." 714 F.2d at 1580. In *Prima Tek*, the Federal Circuit wrote, "there can be no ... induced infringement of invalid patent claims." 412 F.3d at 1291.

The dicta in these two cases provide inadequate support for a brand new and powerful "good-faith belief in invalidity" defense to inducement. To begin with, the author of *Richdel*, Judge Rich, later called the statement that "invalid claims cannot be infringed" "a nonsense statement." *Spectra-Physics*, 827 F.2d at 1535. On closer examination, it is apparent that the statements in *Richdel* and *Prima Tek* are merely noting that affirming an invalidity finding moots the need for appellate review of infringement issues because there can be no *liability* for infringement of an invalid patent.[8] This was explained in *Sandt Tech., Ltd. v. Resco Metal & Plastics Corp.*:

> Because the district court determined that those claims were invalid, it held that it need not decide infringement. In *Cardinal Chemical Co. v. Morton Intern., Inc.*, 508 U.S. 83, 96, 124 L. Ed. 2d 1, 113 S. Ct. 1967 (1993), the Supreme Court held that the issue of validity is not mooted when a finding of noninfringement is made or affirmed. This case is the exact opposite. Here, the district court determined that the claims (claims 1, 3, and 19) asserted to be infringing were invalid; thus it was not necessary for it to determine

[8] Indeed, after finding the claims invalid, the Court in *Prima Tek* dismissed the cross-appeal on inducement and contributory infringement as moot. 412 F.3d at 1291. If the Court concluded that validity controlled the inducement analysis, it could have simply affirmed the judgment of no inducement or contributory infringement on the merits. *See id.*

> whether Resco infringed those claims; even if it did infringe, the claims were not valid so no judgment of liability could be entered. *See B.F. Goodrich Co. v. Aircraft Braking Sys., Corp.*, 72 F.3d 1577, 1583, 37 U.S.P.Q.2d 1314, 1319 (Fed. Cir. 1996) ("Because we hold that [the] claims are invalid as obvious we need not reach the issues relating to . . infringement.").

264 F.3d 1344, 1356 (Fed. Cir. 2001); *see also Dow Chemical Co. v. Halliburton Oil Well Cementing Co.*, 324 U.S. 320, 331 (1945) ("Since we conclude that the Grebe-Sanford patent is invalid for want of invention, we need not consider respondent's cross-petition raising questions as to whether respondent's process infringed the patent."). Two cases that used loose language when explaining that questions of infringement presented on appeal had been mooted by invalidity cannot supplant decades of cases recognizing that the two issues are independent and must be addressed separately.

C. Releasing Inducers from Liability Based on A Mistaken Belief that the Patent is Invalid is Contrary to the Statutory Presumption of Validity

In 35 U.S.C. § 282, Congress created a statutory presumption that issued patent claims are valid:

> A patent shall be presumed valid. Each claim of a patent (whether in

> independent, dependent, or multiple dependent form) shall be presumed valid independently of the validity of other claims; dependent or multiple dependent claims shall be presumed valid even though dependent upon an invalid claim. The burden of establishing invalidity of a patent or any claim thereof shall rest on the party asserting such invalidity.

This Court recently confirmed the effect and importance of the statutory presumption of validity in *Microsoft Corp. v. i4i Ltd. Partnership:*

> [Section] 282 creates a presumption that a patent is valid and imposes the burden of proving invalidity on the attacker. That burden is constant and never changes and is to convince the court of invalidity by clear evidence.

131 S. Ct. 2238, 2243 (2011) (*quoting American Hoist & Derrick Co. v. Sowa & Sons, Inc.*, 725 F.2d 1350, 1360 (Fed. Cir. 1984)). The statutory presumption is based upon "the basic proposition that a government agency such as the [PTO] was presumed to do its job." *Id.* (*quoting American Hoist*, 725 F.2d at 1359).

Allowing a good-faith belief of invalidity to negate the requisite intent for induced infringement, and consequently allowing an inducer to evade liability for infringement, would severely undermine

the statutory presumption of validity.[9] This presumption of validity requires that invalidity defenses be proved by clear and convincing evidence. *i4i*, 131 S. Ct. at 2245-46. But under Cisco's new test, inducers unable to muster clear and convincing evidence of invalidity will nevertheless escape liability based on nothing more than a wrongly-held subjective belief of invalidity.

Moreover, the burden of proving infringement—which, under Cisco's approach would include the burden of proving the defendant's subjective beliefs—lies on the patentee by a preponderance of the evidence. Therefore, under Cisco's approach, inducers could escape all liability for their infringement merely because the *patentee* failed to *disprove* the inducer's alleged subjective belief that the patent was invalid, however tenuous and however wrong that belief was.

Cisco's proposed test flips both the burden and the standard of proof on their heads. This burden shifting deprives the patentee of the full benefit of the presumption of validity provided to patentees as part of the "carefully crafted bargain" designed by Congress. *See Bonito Boats v. Thunder Craft Boats*, 489 U.S. 141, 150-51 (1989).

---

[9] The Federal Circuit judges who dissented from the denial of Commil's petition for rehearing *en banc* explained that a good-faith belief of invalidity defense "fundamentally changes the operating landscape" and "strikes at the very heart of the presumption of validity by eroding patent rights that have been duly granted by the PTO based solely on an erroneous—albeit good-faith—belief that the PTO erred in granting the patent." Pet. App. 58a-60a.

It is particularly troubling that this end-around of the presumption of validity will *only* come into play when an inducer's alleged good-faith belief is *wrong* and the patent is in fact valid, for inducers who are correct in their beliefs about invalidity will avoid all liability in the traditional way—by invalidating the patent. The present case exemplifies the inequity. Cisco has challenged the validity of Commil's patent at the USPTO in a reexamination proceeding, at the district court both before the jury and judge, and at the Federal Circuit, and Commil prevailed on each occasion. Yet now Cisco seeks to bar Commil from obtaining a remedy for Cisco's infringement unless Commil can prove to the jury that Cisco's subjective beliefs about invalidity were not held in good faith. In cases such as the one at hand where there is no clear and convincing evidence of invalidity, an inducer should not be permitted to circumvent the statutory presumption of validity by claiming a good-faith belief that the patent was invalid.

CONCLUSION

The judgment of the court of appeals should be reversed with respect to inducement, and the case should be remanded with instructions to address the inducement issues under the correct understanding that a defendant's subjective beliefs about defenses are irrelevant to the inducement analysis.

Respectfully submitted,

MARK S. WERBNER
Counsel of Record
RICHARD A. SAYLES
MARK D. STRACHAN
DARREN P. NICHOLSON
SAYLES | WERBNER P.C.
4400 Renaissance Tower
1201 Elm Street
Dallas, TX 75270
(214) 939-8700
mwerbner@swtriallaw.com

LESLIE V. PAYNE
NATHAN J. DAVIS
MIRANDA Y. JONES
HEIM, PAYNE & CHORUSH, LLP
JP Morgan Chase Tower
600 Travis, Suite 6710
Houston, TX 77002
(713) 221-2000

Counsel for Petitioner
Commil USA, LLC

January 20, 2015.

RESPONDENT'S BRIEF

No. 13-896

IN THE

Supreme Court of the United States

COMMIL USA, LLC,

Petitioner,

v.

CISCO SYSTEMS, INC.,

Respondent.

ON WRIT OF CERTIORARI TO THE UNITED STATES COURT OF APPEALS FOR THE FEDERAL CIRCUIT

BRIEF FOR RESPONDENT

JEFFREY E. OSTROW
HARRISON J. FRAHN IV
PATRICK E. KING
JONATHAN SANDERS
SIMPSON THACHER & BARTLETT LLP
2475 Hanover Street
Palo Alto, CA 94304

HENRY B. GUTMAN
SIMPSON THACHER & BARTLETT LLP
425 Lexington Avenue
New York, NY 10017

WILLIAM F. LEE
Counsel of Record
MARK C. FLEMING
FELICIA H. ELLSWORTH
ERIC F. FLETCHER
WILMER CUTLER PICKERING HALE AND DORR LLP
60 State Street
Boston, MA 02109
(617) 526-6000
william.lee@wilmerhale.com

SETH P. WAXMAN
FRANCESCO VALENTINI
WILMER CUTLER PICKERING HALE AND DORR LLP
1875 Pennsylvania Ave., NW
Washington, DC 20006

QUESTION PRESENTED

In *Global-Tech Appliances, Inc.* v. *SEB S.A.*, 131 S. Ct. 2060, 2068 (2011), this Court ruled that a defendant cannot be held liable for actively inducing patent infringement unless the defendant has "knowledge that the induced acts constitute patent infringement." The question presented is whether, in an action alleging induced infringement, evidence of a defendant's reasonable, good-faith belief that a patent is invalid is relevant to determining whether the defendant acted with "knowledge that the induced acts constitute patent infringement."

CORPORATE DISCLOSURE STATEMENT

Cisco Systems, Inc., has no parent corporation. To Cisco's knowledge, no publicly held company owns 10 percent or more of Cisco's stock.

TABLE OF CONTENTS

Page

QUESTION PRESENTED i

CORPORATE DISCLOSURE STATEMENT ii

TABLE OF AUTHORITIES v

INTRODUCTION 1

STATEMENT 4

A. Parties And Technology 4

B. District Court Proceedings 5

C. Appeal Proceedings 9

SUMMARY OF ARGUMENT 10

ARGUMENT 12

I. SECTION 271(b) REQUIRES KNOWLEDGE THAT THE INDUCED CONDUCT CONSTITUTES INFRINGEMENT 12

A. *Global-Tech* Conclusively And Correctly Ruled That Inducement Liability Depends On Knowledge Of Direct Infringement 13

B. The Text And Purpose Of §271(b) Confirm *Global-Tech*'s Interpretation 20

C. Neither This Court's Pre-1952 Case Law Nor Principles Of Aiding And Abetting Support Commil's Position 23

D. The America Invents Act And Longstanding Acquiescence Reveal Congress's Agreement That §271(b) Requires Knowledge Of Infringement 27

TABLE OF CONTENTS—Continued

Page

E. The Notice-Letter Standard Urged By Commil And The Government Would Exacerbate Abusive Practices And Discourage Innovation Without Improving Patent Rights 31

II. EVIDENCE OF A GOOD-FAITH BELIEF OF INVALIDITY IS RELEVANT TO §271(b)'S SCIENTER REQUIREMENT 36

A. A Good-Faith And Reasonable Belief Of Invalidity Is Relevant To Culpability, Which Is Required Under §271(b) 37

1. Under *Global-Tech*, inducement requires knowledge that the induced conduct constitutes "wrongdoing" 37

2. Because patent infringement presupposes patent validity, knowledge of infringement requires knowledge of validity 38

3. Commil's and the government's remaining arguments fail 44

B. Section 298 And Willful Infringement Precedent Confirm That Evidence Of A Good-Faith Belief Of Invalidity Is Relevant To The §271(b) Scienter Inquiry 46

C. The Federal Circuit's Ruling Fosters Innovation Without Endangering Patent Rights 48

CONCLUSION 56

TABLE OF AUTHORITIES

CASES

Page(s)

Aetna Casualty & Surety Co. v. *Leahey Construction Co.*, 219 F.3d 519 (6th Cir. 2000) 25

Alice Corp. Pty. v. *CLS Bank International*, 134 S. Ct. 2347 (2014) 49

Arlington Central School District Board of Education v. *Murphy*, 548 U.S. 291 (2006) 20

Aro Manufacturing Co. v. *Convertible Top Replacement Co.*, 270 F.2d 200 (1st Cir. 1959) 18

Aro Manufacturing Co. v. *Convertible Top Replacement Co.*, 365 U.S. 336 (1961) 18, 19

Aro Manufacturing Co. v. *Convertible Top Replacement Co.*, 377 U.S. 476 (1964) ..... *passim*

Blonder-Tongue Laboratories, Inc. v. *University of Illinois Foundation*, 402 U.S. 313 (1971) 45

Bose Corp. v. *SDI Technologies, Inc.*, 558 F. App'x 1012 (Fed. Cir. 2014) 36

Broadcom Corp. v. *Qualcomm Inc.*, 543 F.3d 683 (Fed. Cir. 2008) 28, 31

Brown v. *Piper*, 91 U.S. 37 (1875) 41

Camp v. *Dema*, 948 F.2d 455 (8th Cir. 1991) 26

Cannon v. *University of Chicago*, 441 U.S. 677 (1979) 30

TABLE OF AUTHORITIES—Continued

Page(s)

Cardinal Chemical Co. v. *Morton International, Inc.*, 508 U.S. 83 (1993) 42, 52

Central Bank of Denver, N.A. v. *First Interstate Bank of Denver, N.A.*, 511 U.S. 164 (1994) 25

Central Telephone Co. of Virginia v. *Sprint Communications Co. of Virginia*, 715 F.3d 501 (4th Cir. 2013) 44

Clark v. *Rameker*, 134 S. Ct. 2242 (2014) 28

Convertible Top Replacement Co. v. *Aro Manufacturing Co.*, 312 F.2d 52 (1st Cir. 1962) 18

Cortelyou v. *Charles Eneu Johnson & Co.*, 207 U.S. 196 (1907) 24

Crowell v. *Baker Oil Tools, Inc.*, 153 F.2d 972 (9th Cir. 1946) 42

Dawson Chemical Co. v. *Rohm & Haas Co.*, 448 U.S. 176 (1980) 18

Deepsouth Packing Co. v. *Laitram Corp.*, 406 U.S. 518 (1972) 40

DSU Medical Corp. v. *JMS Co.*, 471 F.3d 1293 (Fed. Cir. 2006) 29, 30

Dunbar v. *Myers*, 94 U.S. 187 (1876) 41

Ecolab, Inc. v. *FMC Corp.*, 569 F.3d 1335, *amended on reh'g in part*, 366 F. App'x 154 (Fed. Cir. 2009) 30

TABLE OF AUTHORITIES—Continued

Page(s)

Eli Lilly & Co. v. *Teva Pharmaceuticals USA, Inc.*, 609 F. Supp. 2d 786 (S.D. Ind. 2009) 54

Exhibit Supply Co. v. *Ace Patents Corp.*, 315 U.S. 126 (1942) 42

Failla v. *City of Passaic*, 146 F.3d 149 (3d Cir. 1998) 25

Ferguson Beauregard/Logic Controls, Inc. v. *Mega Systems, LLC*, 350 F.3d 1327 (Fed. Cir. 2003) 30

Finisar Corp. v. *DirecTV Group, Inc.*, 523 F.3d 1323 (Fed. Cir. 2008) 46

Forest Group, Inc. v. *Bon Tool Co.*, 590 F.3d 1295 (Fed. Cir. 2009) 31

Fromson v. *Advance Offset Plate, Inc.*,, 755 F.2d 1549 (Fed. Cir. 1985) 44

FTC v. *Actavis, Inc.*, 133 S. Ct. 2223 (2013) 38, 40, 42

Global-Tech Appliances, Inc. v. *SEB S.A.*, 131 S. Ct. 2060 (2011) ..... *passim*

Golden Blount, Inc. v. *Robert H. Peterson Co.*, 438 F.3d 1354 (Fed. Cir. 2006) 35

Greening Nursery Co. v. *J & R Tool & Manufacturing Co.*, 376 F.2d 738 (8th Cir. 1967) 42

Henry v. *A.B. Dick Co.*, 224 U.S. 1 (1912) 23, 24

TABLE OF AUTHORITIES—Continued

Page(s)

Hewlett-Packard Co. v. *Bausch & Lomb, Inc.*, 909 F.2d 1464 (Fed. Cir. 1990) 30

Hilton v. *South Carolina Public Railways Commission*, 502 U.S. 197 (1991) 15

Hoover Co. v. *Mitchell Manufacturing Co.*, 269 F.2d 795 (7th Cir. 1959) 43

In re Bill of Lading Transmission & Processing System Patent Litigation, 681 F.3d 1323 (Fed. Cir. 2012) 15

In re Portola Packaging Inc., 110 F.3d 786 (Fed. Cir. 1997) 31

In re Seagate Technology, LLC, 497 F.3d 1360 (Fed. Cir. 2007) 46, 47

In re Swanson, 540 F.3d 1368 (Fed. Cir. 2008) 31

Jaffé v. *Samsung Electronics Co.*, 737 F.3d 14 (4th Cir. 2013) 48

Johnson Fare Box Co. v. *National Rejectors, Inc.*, 269 F.2d 348 (8th Cir. 1959) 42

Kinetic Concepts, Inc. v. *Blue Sky Medical Group, Inc.*, 554 F.3d 1010 (Fed. Cir. 2009) 30

Liebel-Flarsheim Co. v. *Medrad, Inc.*, 481 F.3d 1371 (Fed. Cir. 2007) 50

Limelight Networks, Inc. v. *Akamai Technologies, Inc.*, 134 S. Ct. 2111 (2014) 13, 40

TABLE OF AUTHORITIES—Continued

Page(s)

Linde Air Products Co. v. *Morse Dry Dock & Repair Co.*, 246 F. 834 (2d Cir. 1917) 42

MagSil Corp. v. *Hitachi Global Storage Technologies, Inc.*, 687 F.3d 1377 (Fed. Cir. 2012) 50

Manville Sales Corp. v. *Paramount Systems, Inc.*, 917 F.2d 544 (Fed. Cir. 1990) 29, 30, 34

Marrin v. *Griffin*, 599 F.3d 1290 (Fed. Cir. 2010) 43

Mayo Collaborative Services v. *Prometheus Laboratories, Inc.*, 132 S. Ct. 1289 (2012) 49

Medtronic, Inc. v. *Mirowski Family Ventures, LLC*, 134 S. Ct. 843 (2014) 49

Mentor H/S, Inc. v. *Medical Device Alliance, Inc.*, 244 F.3d 1365 (Fed. Cir. 2001) 35

Mercoid Corp. v. *Mid-Continent Investment Co.*, 320 U.S. 661 (1944) 21

Metro-Goldwyn-Mayer Studios Inc. v. *Grokster, Ltd.*, 545 U.S. 913 (2005) ..... *passim*

Micro Chemical, Inc. v. *Great Plains Chemical Co.*, 194 F.3d 1250 (Fed. Cir. 1999) 30

Microsoft Corp. v. *DataTern, Inc.*, 755 F.3d 899 (Fed. Cir. 2014) 15

Microsoft Corp. v. *i4i Ltd. Partnership*, 131 S. Ct. 2238 (2011) 31, 46

TABLE OF AUTHORITIES—Continued

Page(s)

Miehle Printing Press & Manufacturing Co. v. *Publication Corp.*, 166 F.2d 615 (7th Cir. 1948) 42

Monessen Southwestern Railway Co. v. *Morgan*, 486 U.S. 330 (1988) 30

Morgan Envelope Co. v. *Albany Perforated Wrapping Paper Co.*, 152 U.S. 425 (1894) 41

nCube Corp. v. *SeaChange International, Inc.*, 436 F.3d 1317 (Fed. Cir. 2006) 35

Nye & Nissen v. *United States*, 336 U.S. 613 (1949) 27

Ohio Citizens Trust Co. v. *Lear Jet Corp.*, 403 F.2d 956 (10th Cir. 1968) 42

Pandrol USA, LP v. *Airboss Railway Products, Inc.*, 320 F.3d 1354 (Fed. Cir. 2003) 44

Patent Specialties Corp. v. *Price*, 54 F.2d 737 (10th Cir. 1931) 42

Payne v. *Tennessee*, 501 U.S. 808 (1991) 15

Permutit Co. v. *Graver Corp.*, 284 U.S. 52 (1931) 41

Prima Tek II, LLC v. *Polypap, S.A.R.L.*, 412 F.3d 1284 (Fed. Cir. 2005) 43

Richdel, Inc. v. *Sunspool Corp.*, 714 F.2d 1573 (Fed. Cir. 1983) 43

TABLE OF AUTHORITIES—Continued

Page(s)

Rosemond v. *United States*, 134 S. Ct. 1240 (2014) 26

Sanofi-Synthelabo v. *Apotex, Inc.*, 550 F.3d 1075 (Fed. Cir. 2008) 54

Smith Flooring, Inc. v. *Pennsylvania Lumbermens Mutual Insurance Co.*, 713 F.3d 933 (8th Cir. 2013) 44

SmithKline Beecham Corp. v. *Apotex Corp.*, 403 F.3d 1331 (2005) 43

Specialty Rental Tools & Supply, Inc. v. *Boyd's Bit Service, Inc.*, 84 F. App'x 90 (Fed. Cir. 2003) 43

SSL Services, LLC v. *Citrix Systems, Inc.*, 769 F.3d 1073 (Fed. Cir. 2014) 53

Tegal Corp. v. *Tokyo Electron Co.*, 248 F.3d 1376 (Fed. Cir. 2001) 25

Toro Manufacturing Corp. v. *Jacobsen Manufacturing Co.*, 357 F.2d 901 (7th Cir. 1966) 42

United States v. *Hitachi America, Ltd.*, 172 F.3d 1319 (Fed. Cir. 1999) 26

United States v. *Line Material Co.*, 333 U.S. 287 (1948) 38

United States v. *Peoni*, 100 F.2d 401 (2d Cir. 1938) 27

United States v. *United Foods, Inc.*, 533 U.S. 405 (2001) 2, 13

TABLE OF AUTHORITIES—Continued

Page(s)

VirnetX, Inc. v. *Cisco Systems, Inc.*, 767 F.3d 1308 (Fed. Cir. 2014) 53

Vita-Mix Corp. v. *Basic Holding, Inc.*, 581 F.3d 1317 (Fed. Cir. 2009) 30

Water Technologies Corp. v. *Calco, Ltd.*, 850 F.2d 660 (Fed. Cir. 1988) 29

Weatherchem Corp. v. *J.L. Clark, Inc.*, 163 F.3d 1326 (Fed. Cir. 1998) 43, 45

Wells Fargo Bank v. *Arizona Laborers, Teamsters & Cement Masons Local No. 395 Pension Trust Fund*, 38 P.3d 12 (Ariz. 2002) 26

DOCKETED CASES

In re Innovatio IP Ventures, LLC Patent Litigation, No. 11-cv-9308 (N.D. Ill.) 33

Limelight Networks, Inc. v. *Akamai Technologies, Inc.*, No. 12-786 (U.S.) 16

STATUTES AND LEGISLATIVE MATERIALS

18 U.S.C. §2 ..... 26, 27

21 U.S.C. §355(j)(5)(B)(iii) 54

TABLE OF AUTHORITIES—Continued

Page(s)

35 U.S.C.
§154(a)(1) 40
§271 ..... 40, 45
§271(a) 40, 41
§271(b) ..... *passim*
§271(c) 17, 18, 21, 23
§282 ..... 31, 45
§282(b) 45
§282(b)(1) 39
§282(b)(2) 37, 39
§287(a) 29
§298 ..... *passim*

Leahy-Smith America Invents Act, Pub. L. No. 112-29, 125 Stat. 284 (2011) ..... *passim*

H.R. Rep. No. 82-1923 (1952) 21, 25, 41

H.R. Rep. No. 112-98 (2011) 27, 28, 31, 47

S. Rep. No. 82-1979 (1952) 21, 25, 34, 41

S. Rep. No 110-259 (2008) 47

S. Rep. No. 111-18 (2009) 47

Contributory Infringement: Hearings Before Subcomm. No. 4 of the H. Comm. on the Judiciary on H.R. 3866, 81st Cong. (1949) 22

155 Cong. Rec. S2715 (Mar. 3, 2009) 47

157 Cong. Rec. S1374 (Mar. 8, 2011) 46

S. 515, 111th Cong. (Apr. 2, 2009) 47

S. 1145, 110th Cong. (Jan. 24, 2008) 47

TABLE OF AUTHORITIES—Continued

Page(s)

OTHER AUTHORITIES

Allison, John R., & Mark A. Lemley, *Empirical Evidence on the Validity of Litigated Patents*, 26 AIPLA QJ. 185 (1998) 49

Allison, John R., et al., *Patent Quality and Settlement Among Repeat Patent Litigants*, 99 Geo. L.J. 677 (2011) 32

Black's Law Dictionary (3d ed. 1933) 41

Black's Law Dictionary (10th ed. 2014) 41

Carrier, Michael A., *Payment After* Actavis, 100 Iowa L. Rev. 7 (2014) 54

Chien, Colleen, *Startups and Patent Trolls*, 17 Stan. Tech. L. Rev. 461 (2014) 48

Chisum, Donald S., *Chisum on Patents* (2014) 34

Dobbs, Dan B., et al., *The Law of Torts* (2d ed. 2011) 25

Executive Office of the President, *Patent Assertion and U.S. Innovation* (2013), *available at* http://www.whitehouse.gov/sites/default/files/docs/patent_report. pdf 32, 51, 52

TABLE OF AUTHORITIES—Continued

Page(s)

FTC, *Prepared Statement of the Federal Trade Commission on Discussion Draft of Patent Demand Letter Legislation* (May 22, 2014), *available at* http://www.ftc.gov/system/files/documents/public_statements/310821/140522patentdemandltrs.pdf 32

Lohr, Steve, *A Bull Market in Tech Patents*, N.Y. Times, Aug. 17, 2011, at B1 48

Mann, Ronald J., & Marian Underweiser, *A New Look at Patent Quality*, 9 J. Empirical Legal Stud. 1 (2012) 49

PricewaterhouseCoopers, *2014 Patent Litigation Study* (2014), http://www.pwc.com/en_US/us/forensic-services/publications/assets/2014-patent-litigation-study.pdf 51

PTO, *I Got a Letter*, http://www.uspto.gov/patents-maintaining-patent/patent-litigation/i-got-letter (last visited Feb. 19, 2015) 11, 32

Restatement of Torts (1939) 25, 26, 27

Restatement (Second) of Torts (1979) 25, 26, 27

RPX Corporation, *2013 NPE Litigation Report* (2014), http://www.rpxcorp.com/wp-content/uploads/2014/01/RPX-2013-NPE-Litigation-Report.pdf 51

TABLE OF AUTHORITIES—Continued

Page(s)

Waters, *Tech Patent Arms War Reaches New Level of Intensity*, Financial Times, Mar. 31, 2011, at 16 48

Webster's New International Dictionary of the English Language (2d ed. 1945) 41

IN THE

Supreme Court of the United States

No. 13-896

COMMIL USA, LLC,

Petitioner,

v.

CISCO SYSTEMS, INC.,

Respondent.

ON WRIT OF CERTIORARI TO THE UNITED STATES COURT OF APPEALS FOR THE FEDERAL CIRCUIT

BRIEF FOR RESPONDENT

INTRODUCTION

In *Global-Tech Appliances, Inc.* v. *SEB S.A.*, this Court "consider[ed] whether a party who 'actively induces infringement of a patent' under 35 U.S.C. §271(b) must know that the induced acts constitute patent infringement." 131 S. Ct. 2060, 2063 (2011). The Court answered this question unequivocally: "[W]e now hold that induced infringement under §271(b) requires knowledge that the induced acts constitute patent infringement." *Id.* at 2068; *see also id.* at 2072 (Kennedy, J., dissenting) ("[T]o induce infringement a defendant must know 'the induced acts constitute patent infringement.'"). The Court then explained that a patentee could establish the defendant's knowledge under

§271(b) by showing willful blindness, because "a willfully blind defendant is one who takes deliberate actions to avoid confirming a high probability of *wrongdoing*." *Id.* at 2070-2071 (emphasis added). *Global-Tech* thus establishes that the linchpin of scienter under §271(b) is specific, culpable intent—*i.e.*, knowledge of wrongdoing or unlawful conduct.

The Federal Circuit's decision in this case is a straightforward application of *Global-Tech*. There has never been anything wrongful or unlawful about practicing the steps of an invalid patent claim. It follows, therefore, that if one induces others to perform steps that are claimed by a patent that he reasonably and in good faith believes is invalid, he cannot be said to know that he is inducing any wrongdoing. Without culpable intent, under *Global-Tech*, there is no liability for induced infringement.

Commil asks this Court to ignore *Global-Tech* and change the course of inducement liability in patent law. In fact, Commil seeks a more radical change now than it did in its petition for certiorari or before the Federal Circuit, where it conceded that *Global-Tech* held that §271(b) requires "'knowledge that the induced acts constitute patent infringement.'" Commil C.A. Br. 42; *see also* Pet. 24. Now, Commil devotes the majority of its brief to arguing that §271(b) requires only a showing of mere knowledge of the patent's existence and "potential relevance" (Br. 16)—as opposed to knowledge that "the induced acts constitute patent infringement," *Global-Tech*, 131 S. Ct. at 2063. Commil waived this argument, which was neither raised nor addressed below. *E.g.*, *United States* v. *United Foods, Inc.*, 533 U.S. 405, 416-417 (2001). The question properly before the Court is a different one: "Whether the Federal Circuit erred in holding that a defendant's belief that a patent

is invalid is a defense to induced infringement under 35 U.S.C. §271(b)." Pet. i.

The reason for Commil's tactical switch is apparent: A scienter rule that requires knowledge of infringement but is somehow satisfied even if the defendant reasonably and in good faith believes that the patent is invalid would make no sense. It would divorce liability for induced infringement from its underpinning of specific, culpable intent. It would ignore the foundational principle that infringement presupposes the existence of a valid patent, as well as the reality that many issued patents are ultimately found to be invalid. And it would create a confusing and irrational schism between the evidence relevant to willful infringement and the evidence relevant to induced infringement.

Commil's newly proposed rule—that the intent required for inducement requires only knowledge of the patent's existence and "potential relevance" (Br. 16)—lacks any support in law or policy. It is contrary to the holding and reasoning of *Global-Tech* and finds no support in the text of §271(b), this Court's precedent, or the purpose of induced infringement—to impose liability on culpable conduct. It is inconsistent with prevailing principles of aiding-and-abetting liability in both tort and criminal law. And it ignores Congress's acquiescence in a quarter century of patent jurisprudence, as well as its implicit approval of *Global-Tech*'s knowledge-of-infringement requirement through the America Invents Act, enacted only months later. Commil's request to ignore the question presented and overrule *Global-Tech sub silentio*, moreover, would embolden the abusive practices of patent assertion entities, which routinely spray out vague demand letters asserting questionable patents they do not themselves practice in the hope of extracting a settlement or licens-

ing fee. If those predatory practices were sufficient to establish scienter, innovative operating companies would often have no choice but to remove from the market successful products that have substantial non-infringing uses or succumb to licensing demands, because even a reasonable investigation that reveals a patent is probably invalid would serve no purpose in defending against assertions of induced infringement. Nothing in the Patent Act or this Court's jurisprudence warrants that result.

The Federal Circuit's judgment should be affirmed.

STATEMENT

A. Parties And Technology

Cisco is a global leader in the development and deployment of wireless networking systems for computers and other devices. Cisco employs over 70,000 people worldwide and invests billions of dollars every year on research and development. By 2005, Cisco was a market leader in the sale of wireless access points that used the well-known "WiFi" wireless communication protocol. A6229.[1]

In March 2007, Commil, a patent assertion entity that does not develop or sell any products but merely holds and monetizes intellectual property, acquired U.S. Patent No. 6,430,395 ("the '395 patent"). A5805; A5821; A12552-12553. Commil purchased the '395 patent from a venture capital fund for $400,000 with plans "to enforce it" and agreed to pay the fund "a 10-percent back-end" on any amounts collected in excess of $10 million. A5821. The '395 patent is directed to "mobile devices utilizing the Bluetooth short-range wireless

[1] "A" refers to the court of appeals appendix.

communication protocol"—a technology distinct from WiFi. Pet. App. 79a. The patent claims "methods [to] provide seamless and reliable handoff ... while [a] mobile device is moving" within a network. *Id.*; *see also id.* 198a-202a. The patent specification mentions Bluetooth by name over forty times (*e.g.*, *id.* 107a, 110a, 144a), but neither the patent nor the prosecution history ever refers to WiFi (A6023).

B. District Court Proceedings

1. In August 2007, less than five months after acquiring the '395 patent, Commil sued Cisco in the U.S. District Court for the Eastern District of Texas, asserting that Cisco was liable for direct, induced, and contributory infringement of the '395 patent. A1500-1502. Commil asserted infringement of method claims directed against Cisco's WiFi products. A112. As to inducement, Commil contended that end-users operating WiFi networks that employ Cisco's products perform steps that infringe the asserted claims, and that Cisco "induced" such direct infringement by selling its WiFi products. Over Cisco's objection, the district court construed the asserted claims to encompass not only Bluetooth, but more broadly to include "'a set of procedures required to initiate and maintain short-range communication between two or more devices.'" A1.

Commil's claims were first tried to a jury in May 2010. Cisco argued that, if construed to cover WiFi, the claims were invalid due to lack of written description and lack of enablement. Commil's expert agreed that neither the patent nor its prosecution history refers to WiFi (A6023), even though WiFi was well-known at the time of the patent's filing (A5763) and to the inventors (A5797). Instead, the patent describes implementation in a Bluetooth protocol (Pet. App. 107a, 144a-152a, 180a,

196a-197a) and also mentions other short-range communications protocols that were "designed ... as a cable replacement" (Pet. App. 107a; *see also* A6023). WiFi operates at further distances than Bluetooth and similar protocols that are used for short-range communications. A5770; Dist. Ct. Dkt. 348, at 29. Cisco also presented evidence that the claimed method could not be implemented in a WiFi system, and that the inventors could not do so despite spending millions of dollars and multiple years in the effort. A5799-5801; A5804-5805; A5932; A5938; A6026-6027; A12001.

After Commil conceded that Cisco's accused products have substantial non-infringing uses, the district court granted judgment as a matter of law of no contributory infringement. A19; A6004; A6119. The first jury found Cisco liable for direct, but not induced, infringement. A136-137. The jury also found that Cisco had not met its burden of proving that the asserted claims were invalid and awarded Commil $3.7 million in damages. A138-139.

The district court then ordered a new trial based on its conclusion that a statement by Cisco's local counsel "affected the jury's ability to discharge the functions for which they were empaneled." A6057.[2] Over Cisco's objection, the court limited the partial retrial to the aspects of the first verdict with which Commil was dissatisfied: induced infringement and damages.

2. In the second trial, Cisco sought to present evidence that its reasonable, good-faith belief that the

---

[2] Local counsel apologized to the court, Commil, and the jury for his comment, and Cisco filed declarations from two in-house attorneys who attended the trial, each expressing regret for local counsel's comment and stating unequivocally that Cisco did not condone it before or after the fact. A2142-2146.

'395 patent was invalid negated the specific intent required for induced infringement. Commil had previously acknowledged the relevance of such evidence: When seeking a partial new trial, Commil admitted that "Cisco may argue that it believed the '395 patent was invalid as a defense to the element of specific intent." A2215 n.28.

As the second trial approached, Commil changed course and moved *in limine* to preclude Cisco from presenting this evidence. Pet. App. 45a-46a. Over Cisco's objection and proffer, the district court granted Commil's motion and excluded any evidence of, or argument regarding, Cisco's good-faith belief of invalidity. *Id.* 46a, 206a-208a; A6365; A6061-6063.

During the second trial, Commil's evidence that Cisco was even aware of the '395 patent before the lawsuit was limited to: (1) a single citation to the '395 patent in an unrelated Cisco patent application in a different technical field (cited before Cisco even acquired the accused technology) (A12609; A12611; A12618; A12724); and (2) vague testimony that the CEO of Commil's predecessor-in-interest had—on some unspecified date in 2004 or 2005—mentioned to "a guy called Yoav something" at Cisco that his company held patents (JA85). There was no testimony that the CEO specifically mentioned the '395 patent to "Yoav" or anyone else at Cisco. JA83-95.[3]

---

[3] Commil asserts that, during the first trial, Cisco employee Bob O'Hara "admitted that Cisco knew about Commil's '395 Patent." Pet. Br. 8-9 (citing Pet. App. 233a-234a). When Commil questioned Mr. O'Hara on this point during the second trial, however, Mr. O'Hara made clear that "[t]he correct answer is I don't know"; the original testimony concerned the meaning of a reference in a patent application with which Mr. O'Hara was unin-

Though the district court precluded Cisco from presenting evidence of its good-faith belief of invalidity, the court did allow Cisco to present evidence of its good-faith belief of non-infringement (Pet. App. 46a)—a ruling Commil did not challenge on appeal. Thus, a Cisco employee testified to his review of the '395 patent and to his conclusion that it "refer[ed] repeatedly to the use of Bluetooth," not WiFi, and that Cisco's WiFi customers did not perform the claimed steps. A6289-6291.

During the charging conference in the second trial, Cisco objected to any jury instruction stating that the jury could find inducement if Cisco "knew or *should have known*" that its actions would induce direct infringement. A6369 (emphasis added). Overruling Cisco's objection, the court instructed the jury with the erroneous "should have known" formulation. JA21. Commil specifically highlighted this incorrect standard during its summation. A6386. After the verdict but before the judgment, this Court decided *Global-Tech*, conclusively establishing that mere negligence ("should have known") is insufficient to prove inducement. Cisco renewed its objection and cited *Global-Tech* in post-verdict motions (A36), which the district court denied.

The second jury found Cisco liable for induced infringement and awarded Commil approximately $63.8 million in damages. A162-164. Cisco moved for judgment as a matter of law of no inducement, contending *inter alia* that Commil had failed to show that Cisco's customers directly infringed the patent by performing

---

volved. A6306; Dist. Ct. Dkt. 347, at 62-63; *see also* A6316. The court of appeals did not address Cisco's argument that the evidence failed to show that Cisco had the requisite knowledge of the '395 patent's existence (C.A. Br. 37-39)—an issue that remains open on remand.

every step of the asserted method claims in the '395 patent. *See* Dist. Ct. Dkt. 420, at 3-12; A28-29; Pet. App. 30a-33a. Cisco also sought a new trial on several grounds, including the erroneous "should have known" jury instruction and the exclusion of its good-faith belief of invalidity evidence. *See* Dist. Ct. Dkt. 469, at 11; JA6; A36; Pet. App. 6a-10a. The court denied Cisco's post-trial motions and entered final judgment against Cisco for $74 million including costs and interest. A28-29; Pet. App. 48a-49a.

C. Appeal Proceedings

The Court of Appeals for the Federal Circuit affirmed in part, vacated in part, and remanded for further proceedings.

The panel unanimously ordered a new trial because of the erroneous jury instruction that Cisco could be liable for induced infringement if Cisco "knew or should have known" that end-users directly infringed. Pet. App. 6a-10a, 22a, 28a. The panel specifically noted that *Global-Tech* "held that induced infringement 'requires knowledge that the induced acts constitute patent infringement.'" Pet. App. 7a (quoting *Global-Tech*, 131 S. Ct. at 2068).

A panel majority (Prost & O'Malley, JJ.) also concluded that Cisco was entitled to present evidence of its good-faith belief of invalidity to negate the specific intent required for induced infringement. Pet. App. 10a-13a, 28a-29a. The majority reasoned that because "one cannot infringe an invalid patent" (*id.* 11a (citing cases)), "a good-faith belief of invalidity is evidence that may negate the specific intent to encourage another's infringement, which is required for induced infringement" (*id.* 12a). The majority further explained that

"[u]nder our case law, it is clear that a good-faith belief of non-infringement is relevant evidence that tends to show that an accused inducer lacked the intent required to be held liable for induced infringement" and that it saw "no principled distinction between a good-faith belief of invalidity and a good-faith belief of non-infringement." *Id.* 11a.[4]

Commil petitioned for rehearing en banc, challenging the panel's ruling on both the jury instruction and Cisco's good-faith belief of invalidity. The Federal Circuit unanimously denied Commil's petition as it concerned the erroneous jury instruction and denied the petition as it concerned Cisco's good-faith belief of invalidity over the dissent of five judges. Pet. App. 51a-52a, 53a, 61a.

SUMMARY OF ARGUMENT

I. This Court's holding in *Global-Tech Appliances, Inc.* v. *SEB S.A.* was unambiguous: "[W]e now hold that induced infringement under §271(b) requires knowledge that the induced acts constitute patent infringement." 131 S. Ct. 2060, 2068 (2011); *see also id.* at 2072 (Kennedy, J., dissenting) (same). Nothing in the Court's reasoning in *Global-Tech*—and nothing in *Aro Manufacturing Co.* v. *Convertible Top Replacement Co.*, 377 U.S. 476 (1964)—clouds this unequivocal holding.

---

[4] A different majority (Prost & Newman, JJ.) declined to decide whether end-users who make use of WiFi networks employing Cisco's products directly infringe the '395 patent because the case would be remanded anyway. Pet. App. 21a. Judge O'Malley noted in dissent that the issue was "potentially dispositive." *Id.* 33a. Cisco's appellate challenge to the damages award (C.A. Br. 53-59) was likewise left open on remand. Pet. App. 21a.

Global-Tech's knowledge-of-infringement requirement is, moreover, correct. It is faithful to the text of §271(b) and congressional purpose. It finds confirmation in this Court's pre-1952 case law and in the tort and criminal law principles of aiding-and-abetting liability that §271(b) reflects. Congress itself has indicated its approval of the knowledge-of-infringement requirement through both acquiescence and recent legislation presuming the requirement's existence. By contrast, Commil's watered-down standard would needlessly exacerbate an already serious threat to American businesses: indiscriminate licensing demands made by patent assertion entities "in the hope that some recipients will be misled or intimidated into paying for licenses." PTO, *I Got a Letter*, http://www.uspto.gov/patents-maintaining-patent/patent-litigation/i-got-letter (last visited Feb. 19, 2015).

II. The Federal Circuit's ruling that a good-faith belief of patent invalidity is relevant to §271(b)'s scienter requirement is a straightforward application of *Global-Tech*. The linchpin of liability for induced infringement is culpability—knowledge that the induced conduct violates the patentee's rights. Because the defendant's conduct cannot be wrongful or violate the patentee's rights if the patent is invalid, there can be no knowledge of infringement, and thus no inducement liability, when the defendant believes reasonably and in good faith that the patent is invalid. Congress's inclusion in the America Invents Act of a provision that presumes the relevance in inducement cases of opinions of counsel regarding patent validity reinforces the correctness of the Federal Circuit's decision. So does the fact that evidence of a good-faith belief of invalidity is relevant to the willful infringement inquiry, even though the scienter standard for willfulness is lower than for inducement.

Commil and the government take great pains to assert that invalidity and non-infringement are doctrinally distinct. These contentions miss the critical point: When considering whether the defendant knew that it was inducing *wrongful* conduct in violation of the patentee's rights, distinctions between invalidity and non-infringement do not matter. A belief in either one—reasonable and held in good faith—is evidence that the defendant did not act with the required specific intent. Furthermore, the purported distinctions between infringement and validity do not show that the two concepts are completely independent. Even in the context of *direct* infringement (where scienter is not required), infringement *presupposes* the existence of a valid patent. Nothing in the statute requires the counterintuitive ruling that a party that reasonably and in good faith believes a patent invalid can nonetheless be charged with specific intent to induce patent infringement.

The judgment of the court of appeals should accordingly be affirmed.

ARGUMENT

I. SECTION 271(b) REQUIRES KNOWLEDGE THAT THE INDUCED CONDUCT CONSTITUTES INFRINGEMENT

In its petition for certiorari, Commil asked the Court to determine "[w]hether the Federal Circuit erred in holding that a defendant's belief *that a patent is invalid* is a defense to induced infringement under 35 U.S.C. §271(b)." Pet. i (emphasis added). Now, Commil and its amici devote most of their efforts to a different issue, arguing that §271(b) does not even require knowledge that "the induced acts constitute patent infringement." *Global-Tech Appliances, Inc.* v. *SEB S.A.*, 131 S. Ct. 2060, 2063 (2011).

Commil's limited briefing of the actual question presented highlights the reason for this switch: Commil's arguments depend almost entirely on rejecting the holding and reasoning of *Global-Tech*. In light of Commil's and its amici's focus on relitigating *Global-Tech*, Cisco will address those contentions first, even though the argument was not raised or addressed below and is not subsumed within the question on which the Court granted certiorari. *E.g.*, *United States* v. *United Foods, Inc.*, 533 U.S. 405, 416-417 (2001) (declining to consider an "argument ... 'not raised or addressed'" below); *Limelight Networks, Inc.* v. *Akamai Techs., Inc.*, 134 S. Ct. 2111, 2120 (2014) (declining to consider question that was "presuppose[d]" by—but not part of—the question on which certiorari was granted).

A. *Global-Tech* Conclusively And Correctly Ruled That Inducement Liability Depends On Knowledge Of Direct Infringement

1. Section 271(b) provides: "Whoever actively induces infringement of a patent shall be liable as an infringer." Although the text of §271(b) does not expressly state the type or degree of intent required to "actively induce[] infringement," this Court addressed precisely that question in *Global-Tech*. 131 S. Ct. at 2065-2068.

The opening sentence of *Global-Tech* states the question presented and decided unambiguously: "We consider whether a party who 'actively induces infringement of a patent' under 35 U.S.C. §271(b) must *know that the induced acts constitute patent infringement*." 131 S. Ct. at 2063 (emphasis added). The government accordingly concedes that the "'question presented'" in *Global-Tech* was "whether the required in-

tent was knowledge of actual infringement or merely knowledge of the acts that constitute infringement." U.S. Br. 14.

The Court answered that unambiguous question with an unambiguous holding: "[W]e now hold that induced infringement under §271(b) requires knowledge that the induced acts constitute patent infringement." 131 S. Ct. at 2068; *see also id.* at 2072 (Kennedy, J., dissenting) (same). That holding was also necessary to the ultimate outcome in *Global-Tech*: the Court affirmed the judgment of inducement liability against the petitioner (Pentalpha) because the evidence presented at trial supported the inference "that Pentalpha subjectively believed there was a high probability that [respondent] SEB's fryer was patented, that Pentalpha took deliberate steps to avoid knowing that fact, and that it therefore willfully blinded itself *to the infringing nature* of [its customer's] sales." *Id.* at 2072 (emphasis added); *see also id.* at 2071 (rejecting recklessness standard because it did not "require active efforts by an inducer to avoid knowing about the *infringing nature of the activities*" (emphasis added)). The Court's reasoning thus confirms its express holding: The ultimate scienter question under §271(b) is whether the defendant has knowledge that the induced conduct constitutes infringement.[5]

---

[5] In dissent, Justice Kennedy reasoned that only actual knowledge—not willful blindness—can satisfy §271(b)'s intent requirement, but agreed that the intent requirement was directed to the infringing nature of the induced conduct. *E.g.*, 131 S. Ct. at 2072 ("One can believe that there is a 'high probability' that acts might infringe a patent but *nonetheless conclude they do not infringe*." (emphasis added)).

The Federal Circuit has consistently applied *Global-Tech*'s unambiguous "hold[ing]," reaffirming that induced infringement "requires both knowledge of the existence of the patent and 'knowledge that the induced acts constitute patent infringement.'" Pet. App. 9a (quoting *Global-Tech*, 131 S. Ct. at 2068); *see also Microsoft Corp.* v. *DataTern, Inc.*, 755 F.3d 899, 904 (Fed. Cir. 2014) (induced infringement requires "knowledge that the induced acts constitute patent infringement"); *In re Bill of Lading Transmission & Processing Sys. Patent Litig.*, 681 F.3d 1323, 1339 (Fed. Cir. 2012) (accused infringer must "kn[o]w that the customer's acts constituted infringement"). The government concedes as much. U.S. Br. 13.[6]

2. Nonetheless, Commil and the government now contend that *Global-Tech* did not *really* require "knowledge that the induced acts constitute patent infringement." 131 S. Ct. at 2068. The government goes so far as to assert (Br. 12) that *Global-Tech* did not "clearly resolve" whether §271(b) requires knowledge of infringement. *See also* Pet. Br. 16-17.

That revisionist account is decidedly audacious, not least because it is contrary to Commil's and the government's own prior statements. Commil has repeatedly conceded that *Global-Tech* established that §271(b) requires "'knowledge that the induced acts constitute

---

[6] Given *Global-Tech*'s unequivocal holding, if Commil and the government wished to accomplish the result they now advocate, they should have asked this Court to overrule *Global-Tech* expressly. For good reason, they have not done so. *See Payne* v. *Tennessee*, 501 U.S. 808, 828 (1991) (considerations of *stare decisis* "at their acme" in cases involving property rights); *Hilton* v. *South Carolina Pub. Rys. Comm'n*, 502 U.S. 197, 202 (1991) (*stare decisis* has "special force" in the area of statutory interpretation).

patent infringement.'" Commil C.A. Br. 42 (quoted in U.S. Cert. Br. 17); *see also* Pet. 24 (*Global-Tech* "held that inducement requires intent to cause a third party to infringe, not just intent to cause the third party to act in a manner that happens to be infringing"). The government endorsed the same position before this Court last Term. U.S. Br. 13, *Limelight*, No. 12-786 (U.S. Mar. 3, 2014) ("Under ordinary principles of inducement liability, if a vendor induces its customers to practice all of the steps in the patented process, *and does so with knowledge that the induced acts constitute infringement*, the vendor would be liable [under §271(b)]." (emphasis added; citing *Global-Tech*)). Indeed, the government has twice conceded *in this case* that "it would be natural to construe the reference to 'infringement' [in §271(b)] to require knowledge *that the induced conduct actually practices the patent.*" U.S. Br. 13 (emphasis added); *see also* U.S. Cert. Br. 19 (same).

Besides contradicting their prior positions, Commil's and the government's reading of *Global-Tech* fails on its own terms. Although the government remarkably calls *Global-Tech*'s adoption of the knowledge-of-infringement requirement a "suggest[ion]" (Br. 12), the Court could not have been clearer: "[W]e *now hold* that induced infringement under §271(b) *requires* knowledge that the induced acts constitute patent infringement." *Global-Tech*, 131 S. Ct. at 2068 (emphasis added).

Commil and the government base their reading on their contention that the "factual circumstances" of *Global-Tech* "did not require" the Court to decide that more than mere awareness of the patent's existence is required before a defendant can be held liable for the acts of third parties. U.S. Br. 12; *see also* Pet. Br. 23-

24. But as previously noted (*supra* p.14), the Court affirmed Pentalpha's inducement liability not merely because it willfully blinded itself to the patent's existence, but because it also "willfully blinded itself *to the infringing nature of [its customer's] sales*." 131 S. Ct. at 2072 (emphasis added). It was only because Pentalpha deliberately copied SEB's fryer and then sold the copied product that willful blindness to the existence of SEB's patent permitted a further inference of willful blindness to the fact that Pentalpha's exact copy infringed that patent. *Id.* at 2064. Thus, although knowledge of the patent's existence *can* sometimes be sufficient proof, *Global-Tech* is unequivocal about the ultimate scienter question in §271(b) cases: The defendant must have knowledge of the "infringing nature" of the induced conduct. *Id.* at 2072.[7]

Commil's and the government's reliance on *Aro Manufacturing Co.* v. *Convertible Top Replacement Co.*, 377 U.S. 476 (1964) ("*Aro II*"), fares no better. In *Aro II*, the Court considered whether the knowledge requirement for contributory infringement under §271(c) "require[d] a further showing that Aro knew that the tops were patented, and knew also that Ford was not licensed under the patent so that any fabric replacement by a Ford car owner constituted infringement." *Id.* at 488. As the government concedes, the Court "held that Section 271(c) requires knowledge that the 'combination ... was both patented and *infringing*.'" U.S. Br. 14 (emphasis added) (quoting *Aro II*, 377 U.S. at 488); *see also Aro II*, 377 U.S. at 488 & n.8

---

[7] Although the government at one point suggests (Br. 11) that *Global-Tech* "did not purport to conduct an independent examination" of §271(b)'s "text and history," *Global-Tech* considered both, finding them inconclusive. 131 S. Ct. at 2065-2066.

(plurality opinion) (noting that a majority of the Court shared this view); *id.* at 514-515 (White, J., concurring); *id.* at 524-527 (Black, J., dissenting); *Dawson Chem. Co.* v. *Rohm & Haas Co.*, 448 U.S. 176, 219 (1980) ("[*Aro II*] held that §271(c) requires a showing that an alleged contributory infringer knew that the combination for which his component was especially designed was *both* patented *and infringing*." (emphases added)). Thus, like *Global-Tech*, *Aro II* requires knowledge of actual infringement, not just knowledge of the patent or the patentee's infringement allegation.

There is no merit to the government's speculation that the Court "appeared to treat" a demand letter sent to Aro on January 2, 1954 as "conclusively establishing Aro's scienter" under §271(c). U.S. Br. 14-15; *see also* Pet Br. 21-23. As in *Global-Tech*, the *Aro II* Court was reviewing a judgment of liability entered against the defendant (Aro) after trial. 377 U.S. at 479-481.[8] And, similarly to the facts in *Global-Tech*, Aro's accused convertible tops were essentially copies of the convertible tops used in the patented combination; indeed, that was their entire purpose, since they were designed to be replacements for such tops. *Id.* at 478-479; *see also Aro Mfg. Co.* v. *Convertible Top Replacement Co.*, 270 F.2d 200, 201 (1st Cir. 1959). Further, neither *Aro I* nor *Aro II* suggests that Aro claimed to be operating under a good-faith belief of non-infringement or patent invalidity at any point during the relevant period. Aro appar-

[8] The judgment of liability against Aro had been vacated by the district court with respect to both General Motors and Ford cars after this Court's earlier decision in *Aro Manufacturing Co.* v. *Convertible Top Replacement Co.*, 365 U.S. 336 (1961) ("*Aro I*"); the First Circuit had then reinstated it with respect to the Ford cars, *Aro II*, 377 U.S. at 480. *See also Convertible Top Replacement Co.* v. *Aro Mfg. Co.*, 312 F.2d 52, 57 (1st Cir. 1962).

ently did not even challenge the patentee's showing of scienter. *Aro II*, 377 U.S. at 488 (scienter issue had "apparently not [been] noticed by the parties or the courts below"). Where, as in *Aro II*, a party fails to mount an intent-based defense, it is perfectly reasonable for a trier of fact to conclude that knowledge of the patent's existence and an allegation of infringement warrants an inference of knowledge that a copy of the patented article infringes that patent.[9]

By contrast, where a defendant like Cisco *does* raise scienter and proposes to negate specific intent with proof that it lacked knowledge that the conduct it is accused to have induced constituted infringement, *Global-Tech* and *Aro II* require that such evidence be considered. *Aro II*'s analysis of Aro's sales *preceding* the January 1954 letter confirms that. As to those sales, the Court found insufficient evidence of scienter to support a judgment of contributory infringement. And, as to those sales, this Court's remand instructions were unequivocal: "Aro cannot be held liable in the absence of a showing that at that time it had already ac-

---

[9] The government speculates (Br. 15 n.2) that Aro might not have had "actual knowledge" of the infringement because the parties "vigorously contested" direct infringement and the Court divided on the issue. Commil similarly notes (Br. 23 n.3) that patent validity was a litigated issue in the lower courts. But the lawsuit against Aro did not begin until April 1956, *Aro I*, 365 U.S. at 337; *see also Aro II*, 377 U.S. at 479—approximately nine months *after* the relevant period ended on July 21, 1955, *id.* at 513-514 (no liability "with respect to replacement-fabric sales made after July 21, 1955"); *id.* at 493-497. Aro apparently did not argue that it had previously held a good-faith belief of non-infringement based on the grounds it later asserted in litigation. *Aro II*, 377 U.S. at 488. In any event, that contention could not have changed the outcome in the deferential post-trial posture in which the Court first considered the scienter issue in *Aro II*.

quired the requisite *knowledge* that Ford car tops were patented *and infringing*." 377 U.S. at 491 (emphases added).

B. The Text And Purpose Of §271(b) Confirm *Global-Tech*'s Interpretation

Global-Tech's interpretation of §271(b) is faithful to statutory text and purpose. The knowledge-of-a-potentially-relevant-patent requirement advocated by Commil and the government cannot be reconciled with either.

1. The interpretation of a statute, of course, "begin[s] with the text." *Arlington Cent. Sch. Dist. Bd. of Educ.* v. *Murphy*, 548 U.S. 291, 296 (2006). As between *Global-Tech*'s knowledge-of-infringement holding and Commil's knowledge-of-the-patent interpretation, that is where the inquiry should end.

To be liable under §271(b), a defendant must "actively induce[] infringement of a patent." Inducement of infringement thus consists of three elements, as the government recognizes: "an act of direct 'infringement'" by the direct infringer; "the inducer's active steps to bring about that infringement"; and "scienter." U.S. Br. 19. *Global-Tech*'s knowledge-of-infringement requirement properly identifies the two relevant conduct elements (direct infringement by a third party and an act of inducement by the defendant) and then recognizes a scienter requirement (actual knowledge or willful blindness) that applies equally to both conduct elements. As the government admits, this is a "natural" reading of the statute. U.S. Br. 13.

In their attempt to avoid that natural reading, Commil and the government needlessly mismatch §271(b)'s elements. Their theory recognizes the two

conduct elements of §271(b)—direct infringement by a third party and active inducement—but would require specific intent as to only the patent's existence and the *patentee*'s infringement *allegation*.[10] In other words, under the government's and Commil's interpretation, the scienter that all agree is necessary to induce an act of "infringement" would not require knowledge that the induced conduct actually constitutes "infringement." If Congress had intended to create such a counterintuitive patchwork, it would have said so explicitly.

2. The knowledge-of-infringement requirement is also critical to effectuating §271(b)'s purpose. Congress's objective in enacting §271(b) and (c) was to create liability for conduct that was not only instrumental to infringement, but *culpably* so. *See* S. Rep. No. 82-1979, at 8 (1952) ("The doctrine of contributory infringement ... has been applied to enjoin those who sought to cause infringement by supplying someone else with the means and directions for infringing a patent. ... [The doctrine] ... has been characterized as '*an expression both of law and morals.*'" (emphasis added)); H.R. Rep. No. 82-1923, at 9 (1952) (same); *accord Mercoid Corp.* v. *Mid-Continent Inv. Co.*, 320 U.S. 661, 677 (1944) (Frankfurter, J., dissenting). This Court has recognized the same principle in the copyright context: "The inducement rule ... premises liability on purposeful, culpable expression and conduct[.]" *Metro-*

---

[10] While Commil and the government would require that the defendant know of the patent's "potential relevance" (Pet. Br. 16), presumably through the patentee's "allegation of infringement" (U.S. Br. 17), they contend that this criterion can be satisfied through a *pro forma* letter stating the patentee's belief that the defendant might be inducing the patent's infringement. This "relevance" criterion does not add anything significant to a defendant's mere knowledge of the patent's existence.

Goldwyn-Mayer Studios Inc. v. *Grokster, Ltd.*, 545 U.S. 913, 937 (2005).

Against this backdrop, requiring knowledge of infringement serves Congress's objective. If a defendant acts with knowledge that his conduct will induce infringement of a valid patent, his conduct is culpable. But if one has a good-faith, reasonable belief that a process does not infringe a valid patent, actions taken to facilitate that process cannot be said to be culpable. *See Global-Tech*, 131 S. Ct. at 2070 ("[A] willfully blind defendant is one who takes deliberate actions to avoid confirming a high probability of *wrongdoing*." (emphasis added)); *id.* at 2072 (Kennedy, J., dissenting) ("The alleged inducer who believes a device is noninfringing cannot be said to know otherwise.").[11]

---

[11] In contrast, Commil's and the government's sweeping theory could potentially make liable even an attorney who provides a good-faith, reasonable opinion advising a client that a competitor's patent is not infringed. Under their interpretation, if the attorney's opinion is incorrect, her facilitation of her client's infringement could subject her to §271(b) liability simply because she knows of the patent's existence and the patentee's allegations. That construction was considered and uniformly rejected in the hearings that ultimately led to the enactment of §271. *See Contributory Infringement: Hearings Before Subcomm. No. 4 of the H. Comm. on the Judiciary on H.R. 3866*, 81st Cong. 51 (1949) (John C. Stedman) ("Does ['actively inducing' infringement] include advice from a patent attorney that a given patent is probably invalid and that the client should take the risk of infringing?"); *id.* at 65 (Giles S. Rich) ("The question of lawyers giving advice came up last year, and nobody apparently took it seriously.").

C. Neither This Court's Pre-1952 Case Law Nor Principles Of Aiding And Abetting Support Commil's Position

Both this Court's relevant pre-1952 precedent and principles of aiding-and-abetting liability in the tort and criminal law are consistent with *Global-Tech*'s conclusion that §271(b) requires knowledge of actual infringement.

1. Commil (but not the government) purports to find support in two of this Court's pre-1952 decisions involving contributory infringement.[12] Pet. Br. 24-27. Commil's arguments on this score are largely answered by *Global-Tech*, where this Court canvassed the pre-1952 landscape and found it inconclusive. 131 S. Ct. at 2065-2067.

In any event, the precedent Commil cites undermines its position. *Henry* v. *A.B. Dick Co.*, 224 U.S. 1 (1912), *overruled on other grounds by Motion Pictures Patents Co.* v. *Universal Film Mfg. Co.*, 243 U.S. 502 (1917), involved allegations of aiding-and-abetting liability against a party who had supplied ink for use in a patented machine. *Id.* at 11. In the very language Commil quotes, the Court made clear that induced infringement requires knowledge of infringement, not just of the patent's existence:

> [I]f the defendants *knew* of the patent *and* that she had *unlawfully* made the patented article, and then sold her ink or other supplies without which she could not operate the machine, *with the intent and purpose that she should use the*

---

[12] Before 1952, "contributory infringement" encompassed both induced infringement (now §271(b)) and actual contributory infringement (now §271(c)). *Global-Tech*, 131 S. Ct. at 2066.

> *infringing article by means of the ink supplied by them*, they would assist in her infringing use.

Id. at 33 (last emphasis in original); *see also id.* at 49.

Commil nonetheless speculates (Br. 24-26) that the defendant in *A.B. Dick* could not have had actual knowledge of infringement because the case presented two threshold issues (jurisdiction and patent misuse), which the Court discussed—and rejected—prior to deciding indirect infringement. But as in *Aro II*, the fact that *A.B. Dick* presented some litigable issues is hardly evidence that, at the time of the relevant sale, the defendant had a reasonable good-faith belief of non-infringement or patent invalidity based on those issues. It certainly does not show that the defendant argued lack of scienter, such that the Court's holding should be viewed as a ruling on the point. To the contrary, the "facts [were] certified" that the accused inducers admitted "to hav[ing] made a direct sale to the user of the patented article, with *knowledge* that under the license from the patentee *she could not use the ink*, sold by them directly to her." *A.B. Dick*, 224 U.S. at 49 (emphases added). The fact that *A.B. Dick* contemplated knowledge of infringement is powerful evidence *against* Commil's theory.[13]

2. *Global-Tech*'s requirement that inducement liability turn on knowledge of infringement is also con-

---

[13] Commil also cites (Br. 26-27) *Cortelyou* v. *Charles Eneu Johnson & Co.*, 207 U.S. 196, 200 (1907), but the Court there concluded merely that there could be no liability absent "sufficient evidence of notice" to the accused inducer. No one disputes that knowledge of the patent's existence is necessary. The question is whether it is sufficient. On that question, *Cortelyou* is silent.

sistent with background principles of tort and criminal law.

a. In tort, aiding-and-abetting liability requires proof of knowledge of another's wrongdoing and an intent to assist the wrongdoing. H.R. Rep. No. 82-1923, at 9 ("[§271(b)] recites in broad terms that one who aids and abets an infringement is likewise an infringer."); S. Rep. No. 82-1979, at 8 (same); *Global-Tech*, 131 S. Ct. at 2067. The first Restatement of Torts explained:

> For harm resulting to a third person from the tortious conduct of another, a person is liable if he ... *knows* that the other's conduct constitutes a *breach of duty* and gives substantial assistance or encouragement to the other[.]

Restatement of Torts §876(b) (1939) (emphases added); *see also Restatement (Second) of Torts* §876(b) (1979) (same); *Central Bank of Denver, N.A.* v. *First Interstate Bank of Denver, N.A.*, 511 U.S. 164, 181 (1994) (same); 2 Dobbs et al., *The Law of Torts* §435 (2d ed. 2011) ("*Aiding, abetting, encouraging.* One who *knowingly* provides substantial aid or encouragement to another's commission of a tort is also ... liable[.]" (second emphasis added)).[14]

---

[14] Amicus Gilead focuses (Br. 6-7) on §876(a) of the first Restatement, rather than §876(b). But the "induc[ement]" then addressed in §876(a) is narrower than the range of conduct qualifying as "actively induc[ing]" under §271(b) because the latter includes conduct such as "substantial assistance or encouragement," which was covered under §876(b) of the first Restatement. *See Tegal Corp.* v. *Tokyo Electron Co.*, 248 F.3d 1376, 1379 (Fed. Cir. 2001) ("'[T]he term is as broad as the range of actions by which one in fact causes, or urges, or encourages, or aids another to infringe a patent.'"); *cf. Failla* v. *City of Passaic*, 146 F.3d 149, 157 (3d Cir. 1998) ("Courts have recognized that [§876(b)] sets forth the standard for civil aiding and abetting liability."); *Aetna Cas. & Sur. Co.*

Precedent similarly requires knowledge of wrongdoing in order to hold a defendant liable for aiding and abetting a third party's tort. *See Wells Fargo Bank* v. *Arizona Laborers, Teamsters & Cement Masons Local No. 395 Pension Trust Fund*, 38 P.3d 12, 23 (Ariz. 2002) ("'[T]he defendants must know that the conduct they are aiding and abetting is a tort.'"); *United States* v. *Hitachi Am., Ltd.*, 172 F.3d 1319, 1337 (Fed. Cir. 1999) ("[L]egal authority in various civil ... contexts supports the view that liability for aiding or abetting requires *inter alia* proof of knowledge of unlawfulness, also articulated as intent to violate the law."); *Camp* v. *Dema*, 948 F.2d 455, 459 (8th Cir. 1991) ("[A]iding and abetting not only requires assistance, but also knowledge of a wrongful purpose.").

b. Longstanding principles of criminal aiding-and-abetting liability also support the knowledge-of-infringement requirement articulated in *Global-Tech*.[15]

Cases interpreting 18 U.S.C. §2 and its predecessors are unequivocal that criminal aiding-and-abetting liability requires specific intent. Section 2 extends liability to "'those who provide *knowing* aid to persons committing federal crimes, *with the intent to facilitate* the crime.'" *Rosemond* v. *United States*, 134 S. Ct. 1240, 1245 (2014) (emphases added); *see also id.* ("[A]

---

v. *Leahey Constr. Co.*, 219 F.3d 519, 533 (6th Cir. 2000) (same). Thus, the more relevant counterpart to §271(b) is §876(b). Moreover, §876(a) still required knowledge "of the conditions under which the act is done" or intent to further "the consequences that ensue"—which, here, would embrace knowledge of the facts showing that the induced conduct practices a valid patent or intent to further infringement, respectively.

[15] This Court considers criminal law principles in interpreting §271(b). *Global-Tech*, 131 S. Ct. at 2068-2070.

person is liable under §2 for aiding and abetting a crime if (and only if) he (1) takes an affirmative act in furtherance of that offense, (2) *with the intent* of facilitating the offense's commission." (emphasis added)); *Nye & Nissen* v. *United States*, 336 U.S. 613, 619 (1949) ("In order to aid and abet another to commit a crime it is necessary that a defendant 'in some sort associate himself with the venture, that he participate in it as in something that he wishes to bring about, that he seek by his action to make it succeed.'" (quoting *United States* v. *Peoni*, 100 F.2d 401, 402 (2d Cir. 1938) (Hand, J.))). The word "'abet' ... carr[ies] an implication of purposive attitude." *Peoni*, 100 F.2d at 402.

D. The America Invents Act And Longstanding Acquiescence Reveal Congress's Agreement That §271(b) Requires Knowledge Of Infringement

1. Since *Global-Tech*, Congress has enacted legislation that presupposes a knowledge-of-infringement requirement for inducement liability. The Leahy-Smith America Invents Act ("AIA"), Pub. L. No. 112-29, 125 Stat. 284 (2011), enacted shortly after *Global-Tech*, was the most significant overhaul of patent law since 1952. H.R. Rep. No. 112-98, at 38-39 & n.4 (2011). Among other reforms, it barred courts and juries from using "[t]he failure of an infringer to obtain the advice of counsel with respect to any allegedly infringed patent" for purposes of "prov[ing] that the accused infringer willfully infringed the patent or *that the infringer intended to induce infringement of the patent*." 35 U.S.C. §298 (emphasis added). The premise of this provision is that a failure to obtain an opinion of counsel can be relevant evidence of a defendant's intent to induce; that relevance arises from the potential inference that the

defendant knew that the induced conduct was infringing and thus did not wish to put the matter before opinion counsel.[16] But there would be no need for §298 under Commil's and the government's reading of §271(b), because an infringer's *failure* to obtain an opinion of counsel does not prove that he knew *of the patent*. Commil and the government would thus render superfluous the part of §298 excluding evidence of a failure to obtain an opinion of counsel as proof of "inten[t] to induce infringement"—a disfavored method of construction. *E.g.*, *Clark* v. *Rameker*, 134 S. Ct. 2242, 2248 (2014).

The government contends that §298 does not "logically imply" the death knell of its position because Congress "could have determined" that it did not want the failure to obtain an opinion of counsel to be used in showing "willful blindness" to the patent's existence. U.S. Br. 16 n.3. That speculative construction cannot withstand scrutiny. The purpose of §298 was, in relevant part, to "reduce pressure on accused infringers to obtain opinions of counsel for litigation purposes." H.R. Rep. No. 112-98, at 53. But once a defendant is accused by the patentee, he is—under the government's theory of scienter—under no pressure to obtain an opinion of counsel, because an opinion can neither prospectively negate actual knowledge of the patent nor retroactively undo any past willful blindness to the patent's existence.[17] The only plausible reading of §298 is that Con-

---

[16] That is how the patentee used the defendant's failure to obtain advice of counsel in *Broadcom Corp.* v. *Qualcomm Inc.*, 543 F.3d 683, 697-700 (Fed. Cir. 2008), the decision Congress "legislatively abrogat[ed]" through §298. H.R. Rep. No. 112-98, at 53.

[17] The government cites *Global-Tech* to support its contention (Br. 16 n.3), but *Global-Tech* relied on the fact that the defendant

gress understood §271(b) to require proof of the defendant's knowledge that the induced conduct constituted infringement and chose to place off-limits one previously recognized way of proving it.[18]

2. Even before the AIA, Congress demonstrated longstanding acquiescence in the Federal Circuit's construction of §271(b), which dates back a quarter century. In 1990, the Federal Circuit ruled that an alleged infringer must know that "his actions would induce actual infringements." *Manville Sales Corp.* v. *Paramount Sys., Inc.*, 917 F.2d 544, 553 (Fed. Cir. 1990) (reversing finding of inducement liability where defendants maintained "'good faith belief" of non-infringement); *see also Water Techs. Corp.* v. *Calco, Ltd.*, 850 F.2d 660, 668 (Fed. Cir. 1988) (requiring subjective "intent to induce infringement") (cited in *Grokster*, 545 U.S. at 936).

In the intervening twenty-five years, the Federal Circuit repeatedly reiterated *Manville*'s knowledge-of-infringement requirement, including in a 2006 en banc decision that "clarif[ied]" that inducement liability requires knowledge of "'actual infringements.'" *DSU Med. Corp.* v. *JMS Co.*, 471 F.3d 1293, 1304 (Fed. Cir. 2006) (en banc in relevant part) (knowledge-of-

---

did obtain an opinion of counsel, albeit one that was deceptively misdirected, 131 S. Ct. at 2071.

[18] The government (Br. 17 n.4) invokes 35 U.S.C. §287(a), which, where it applies, precludes monetary damages for infringement absent patent marking or notification to the defendant. But §287(a) shows that, when Congress wishes to link infringement remedies to *notice* as opposed to specific intent, it does so expressly. That Commil and the government would apply the same "notice" standard for damages liability under both direct and indirect infringement underscores how far their theory goes in diluting §271(b)'s scienter requirement.

infringement requirement "necessarily includes" knowledge of the patent); *id.* at 1307 (panel relied on opinions of counsel in affirming verdict of no inducement);[19] *see also, e.g.*, *Micro Chem., Inc.* v. *Great Plains Chem. Co.*, 194 F.3d 1250, 1261 (Fed. Cir. 1999); *Ferguson Beauregard/Logic Controls, Inc.* v. *Mega Sys., LLC*, 350 F.3d 1327, 1342 (Fed. Cir. 2003); *Ecolab, Inc.* v. *FMC Corp.*, 569 F.3d 1335, 1350-1351, *amended on reh'g in part*, 366 F. App'x 154 (Fed. Cir. 2009); *Kinetic Concepts, Inc.* v. *Blue Sky Med. Group, Inc.*, 554 F.3d 1010, 1024-1025 (Fed. Cir. 2009); *Vita-Mix Corp.* v. *Basic Holding, Inc.*, 581 F.3d 1317, 1328-1329 (Fed. Cir. 2009). At no point has Congress disturbed the line of Federal Circuit precedent originating in *Manville*.[20]

This Court has repeatedly held that such congressional inaction following longstanding lower-court decisions strongly suggests that the decisions are correct. *See Monessen Sw. Ry. Co.* v. *Morgan*, 486 U.S. 330, 338 (1988); *Cannon* v. *University of Chicago*, 441 U.S. 677, 702-703 (1979). That principle applies even more forcefully here, given the Federal Circuit's nationwide juris-

---

[19] *DSU* removed doubt created by a statement in *Hewlett-Packard Co.* v. *Bausch & Lomb, Inc.*, 909 F.2d 1464, 1469 (Fed. Cir. 1990), and noted in some later cases. 471 F.3d at 1305 & n.2; *see also id.* at 1311 (Michel, C.J., concurring) (en banc review unwarranted; no "real conflict[]" in precedent). *DSU* did not purport to overrule any decision to reaffirm *Manville*. *Cf. id.* at 1305 n.2.

[20] In *Global-Tech*, this Court held that a showing of negligence or recklessness (*i.e.*, "should have known") is not sufficient for inducement. 131 S. Ct. at 2068-2069. That holding overruled a portion of *DSU* and *Manville* that had been too permissive with respect to inducement liability. Pet. App. 7a-8a. This aspect of *Global-Tech* only confirms that the required scienter for inducement is even more demanding than the Federal Circuit had previously recognized in *Manville*, *DSU*, and like cases.

diction over patent cases. *See Microsoft Corp.* v. *i4i Ltd. P'ship*, 131 S. Ct. 2238, 2252 (2011) (upholding Federal Circuit's interpretation of §282 where, "[f]or nearly 30 years, the Federal Circuit has interpreted §282 as we do today" without congressional disapproval).

Congress's acquiescence is particularly probative here because Congress has repeatedly reacted to Federal Circuit holdings with which it disagrees. *E.g.*, H.R. Rep. No. 112-98 at 53 (§298 "legislatively abrogates" *Broadcom*); *id.* (AIA amended false-marking provision in response to *Forest Group, Inc.* v. *Bon Tool Co.*, 590 F.3d 1295 (Fed. Cir. 2009)); *In re Swanson*, 540 F.3d 1368, 1375 (Fed. Cir. 2008) ("Congress amended §303(a) to ... 'overturn[] ... *In re Portola Packaging Inc.*, a 1997 Federal Circuit decision'"). In contrast, through nearly a quarter century of Federal Circuit decisions recognizing the knowledge-of-infringement requirement, Congress has not altered the relevant law.

E. The Notice-Letter Standard Urged By Commil And The Government Would Exacerbate Abusive Practices And Discourage Innovation Without Improving Patent Rights

1. In addition to being contrary to precedent, statutory text, and Congress's intent, the rule proposed by Commil and the government would exacerbate the significant and wasteful burdens already imposed on innovative companies by bogus licensing demands and litigation threats. Under the proposed rule, receipt of a vague demand letter that merely identifies a patent and makes generalized inducement allegations would satisfy the intent requirement for inducement liability, even if the accused inducer undertakes a thorough investigation and concludes in good faith that the patent is invalid. So-called "patent assertion entities"

("PAEs")—entities whose sole purpose is to monetize patent portfolios they acquire—routinely employ this strategy, and Commil's argument in this case is a thinly-veiled attempt to roll back Congress's wise restraint in requiring more under §271(b).

Just last year, the Federal Trade Commission warned Congress that patent demand letters "may be sent very broadly and without prior investigation, may assert vague claims of infringement, and may be designed to obtain payments that are based more on the costs of defending litigation than on the merit of the patent claims." FTC, *Prepared Statement of the Federal Trade Commission on Discussion Draft of Patent Demand Letter Legislation* 2 (May 22, 2014). The Patent and Trademark Office alerts American businesses to the same risk. PTO, *I Got a Letter* (demand letters may be sent "in the hope that some recipients will be misled or intimidated into paying for licenses").

These and similar practices are pervasive and wasteful. According to a 2013 White House report, "[c]onservative estimates place the number of threats [by PAEs] in [2012] alone at a minimum of 60,000 and more likely at over 100,000." Executive Office of the President, *Patent Assertion and U.S. Innovation* 6 (2013) ("*White House Report*"). Of these, even those that result in lawsuits are highly suspect: In cases that are decided on the merits, the win rate of PAEs is 8%, compared to 40% for other entities. Allison et al., *Patent Quality and Settlement Among Repeat Patent Litigants*, 99 Geo. L.J. 677, 694 (2011).

These statistics are all the more sobering because they arise under *current* law, which requires inducement plaintiffs to prove specific intent and permits a defendant to offer rebuttal through evidence of a good-

faith belief of non-infringement or invalidity. Adopting Commil's position would revise the law so that merely sending a demand letter would conclusively establish intent to induce. Such a switch would only embolden those engaged in these abusive practices that the government has already recognized as a scourge.[21]

2. By comparison, the government's principal worry is that, under the existing rule, the patentee cannot "confer the requisite knowledge on the inducer." U.S. Br. 18. But the government does not explain why the patentee should be unilaterally able to "confer" the specific intent required to hold multiple defendants liable for the conduct of third parties, even though defendants have reasonable bases for believing that the conduct they encourage does not violate any valid patent rights. The government cites no other statutory scheme in which a potential plaintiff may automatically "confer" *specific* intent on a defendant in that way—and certainly not one where Congress decreed it through words like "actively induce[]." Rather, the knowledge requirement is a defining feature of all causes of action that, like the "inducement rule, ... premise[] liability on purposeful, *culpable* expression and conduct." *Grokster*, 545 U.S. at 937 (emphasis added). If the government has now decided as a policy

---

[21] Commil is correct (Br. 33) that Cisco has been "highly critical" of a recent harassing campaign by a PAE that demanded royalty payments from thousands of WiFi end-users such as bakeries, hotels, and other small businesses based on questionable patents. *See* Am. Compl. 19, *In re Innovatio IP Ventures, LLC Patent Litig.*, Dkt. No. 431, No. 11-cv-9308 (N.D. Ill. Oct. 1, 2012). Nothing in Commil's proposed rule will prevent such abuses. The appropriate response to this predatory behavior is certainly not to incentivize PAEs to send out more demand letters to generate inducement claims.

matter that inducement liability should turn on the unilateral actions of the patentee, it should request that change from Congress, not this Court.

Commil expresses concern (Br. 42) that requiring knowledge of infringement might make it difficult to enforce certain patents against inducers and encourage "inefficient and undesirable" lawsuits against end-users. *See also id.* 29-34. But evidence of a good-faith belief of non-infringement has been part of the scienter inquiry under §271(b) for a quarter century. *See Manville*, 917 F.2d at 553; *supra* pp.29-31. There is no indication that patentees have shied away from vigorously enforcing their patent rights against purported inducers during this time. As Commil's own amicus recognizes, even if an accused inducer *initially* holds a good-faith belief of non-infringement, a patentee who proves that belief incorrect can obtain full prospective relief as soon as the assertions of non-infringement and invalidity are conclusively rejected. Gilead Br. 19.

The only limitation imposed by a good-faith belief of non-infringement is thus on a patentee's ability to exact an outsized damage award from a single alleged inducer. But there is nothing troubling about a rule that incentivizes patentees to bring their claims promptly while encouraging those who receive demand letters to investigate the asserted patents rather than accept the patentees' assertions as conclusive.[22] Even

---

[22] Commil makes sweeping assertions (Br. 29-34) about Congress's purpose in enacting §271(b), but the sources it cites discuss means to "enjoin" inducers, S. Rep. No. 82-1979 at 8, not creation of massive monetary liability without a showing of knowledge that the induced conduct is infringement. *See also* Pet. Br. 31 ("'ability to *prevent* active inducement'" (quoting 5 *Chisum on Patents* §17.04[4][f] (2014) (emphasis added)); *id.* ("'the practical way to *stop* the infringement'" (quoting Giles Rich testimony) (emphasis added)).

then, merely asserting a good-faith belief of non-infringement or invalidity provides no guarantee that non-infringement or invalidity will prevail as a defense. A defendant's intent is an issue of fact that is routinely tested through cross-examination and frequently resolved in the plaintiff's favor based on the record of each case. *See Golden Blount, Inc.* v. *Robert H. Peterson Co.*, 438 F.3d 1354, 1364-1365 (Fed. Cir. 2006) (upholding bench trial verdict of induced infringement despite defendant's opinion of counsel evidence); *nCube Corp.* v. *SeaChange Int'l, Inc.*, 436 F.3d 1317, 1324-1325 (Fed. Cir. 2006) (similar); *Mentor H/S, Inc.* v. *Medical Device Alliance, Inc.*, 244 F.3d 1365, 1379 (Fed. Cir. 2001) (reinstating jury verdict of inducement despite defendant's opinion of counsel evidence).

Nor is there merit to Commil's complaint (Br. 24 n.4) that *Global-Tech*'s knowledge-of-infringement requirement makes it "easier" for a patentee to satisfy the scienter requirement when the defendant "lacks actual knowledge of the patent." Absent actual knowledge, the patentee must establish that the defendant was willfully blind to the "infringing nature" of the induced conduct. *Global-Tech*, 131 S. Ct. at 2071. That requires proof of "*deliberate actions*" by the defendant to avoid learning the truth—an element not required to establish actual knowledge. *Id.* at 2070 (emphasis added). Proving willful blindness is thus different from—but not necessarily easier than—proving actual knowledge. In any event, what matters is not which standard is "easier" to satisfy, but that a willfully blind defendant is more *culpable* than one who in good faith believes that the asserted patent is not infringed or invalid. *Id.* at 2070-2071.

Finally, there is no basis for Commil's fear-mongering about "self-serving" opinions of counsel pro-

cured to defeat inducement. Pet. Br. 37; *cf.* U.S. Br. 30-31. Opinions of counsel can support accused infringers only if they are procured in good faith and are reasonable—both propositions that patentees are well-equipped to test at trial. Commil's suggestion that opinion counsel are unethical or unreasonable in carrying out their task is irresponsible. Nor should it be of concern that such opinions might be dispositive in appropriate cases—*i.e.*, where they are in fact accompanied by "'unquestionable proof of good-faith reliance'" and insufficient countervailing evidence. Pet. Br. 37-38 (quoting *Bose Corp.* v. *SDI Techs., Inc.*, 558 F. App'x 1012, 1024 (Fed. Cir. 2014) (*denying* summary judgment due to material dispute on good-faith reliance)). In any event, to the extent Congress believed there was a problem with advice-of-counsel evidence, it addressed it by enacting §298. *See supra* pp.27-29.[23]

II. Evidence Of A Good-Faith Belief Of Invalidity Is Relevant To §271(b)'s Scienter Requirement

This Court's decision in *Global-Tech* establishes that the linchpin of scienter in §271(b) is culpability—*i.e.*, knowledge of "wrongdoing" and that the induced acts "violate[] the rights of" the patentee. 131 S. Ct. at 2070. Because an inducement defendant who genuinely

---

[23] Commil and the government direct many of their arguments toward the straw man that a good-faith but unreasonable belief of non-infringement or invalidity will preclude inducement liability. *E.g.*, Pet. Br. 18, 37-38; U.S. Br. 31 & n.8. Contrary to the premise of these contentions, *un*reasonable steps in the face of knowledge of the patent's existence and asserted relevance would not negate an inference of willful blindness as to the infringement of a valid patent. Commil is thus incorrect when it asserts (Br. 18) that "an irrational and unreasonable subjective belief" can negate the scienter required under §271(b).

and reasonably believes in good faith that the patent is invalid lacks that knowledge, he lacks the required scienter and cannot be liable under §271(b). Commil's and the government's contrary arguments miss the fundamental link between inducement and culpability; for that reason, they are largely irrelevant to the question presented. They also turn on the false premise that infringement and validity are unrelated concepts. In fact, the text of the Patent Act and case law make clear that patent infringement presupposes patent validity.

A. A Good-Faith And Reasonable Belief Of Invalidity Is Relevant To Culpability, Which Is Required Under §271(b)

1. Under *Global-Tech*, inducement requires knowledge that the induced conduct constitutes "wrongdoing"

The relevance of a defendant's good-faith, reasonable belief of invalidity follows directly from *Grokster* and *Global-Tech*. *Grokster* teaches that "purposeful, *culpable* expression and conduct" are required for inducement. 545 U.S. at 937 (emphasis added). But there is nothing unlawful or even disfavored about practicing the steps of an *invalid* patent. *See* 35 U.S.C. §282(b)(2). Thus, a person who induces another to engage in conduct that the inducer in good faith and reasonably believes practices, at most, steps claimed in an invalid patent is not "culpable" and lacks the requisite scienter for inducement liability.

Global-Tech made this syllogism explicit. *Global-Tech* reasoned that inducement liability was warranted in *Grokster* because the defendants "were fully aware—in the ordinary sense of the term—that their file-sharing software was routinely used in carrying out the acts that constituted infringement (the unauthorized

sharing of copyrighted works) *and that these acts violated the rights of copyright holders*." 131 S. Ct. at 2070 (emphasis added). The Court thus relied on the *Grokster* defendants' knowledge that the underlying "rights" were "violated." *Id.*; *see also id.* at 2069 n.8 (describing willfully blind inducers as "tak[ing] deliberate steps to remain ignorant of [patent] *rights* despite a high probability that the *rights* exist and are being infringed." (emphases added)). But no such rights exist if a patent is invalid. *See, e.g.*, *FTC* v. *Actavis, Inc.*, 133 S. Ct. 2223, 2231 (2013) ("'[A] *valid* patent excludes all except its owner from the use of the protected process or product.' ... But an *invalidated* patent carries with it no such right.'" (quoting *United States* v. *Line Material Co.*, 333 U.S. 287, 308 (1948))).

Consistent with this understanding, this Court reasoned that willful blindness was an adequate scienter standard under §271(b) because "a willfully blind defendant is one who takes deliberate actions to avoid confirming a high probability of *wrongdoing* and who can almost be said to have actually known the critical facts." *Global-Tech*, 131 S. Ct. at 2070-2071 (emphasis added). This formulation again confirms that scienter is tied to knowledge of unlawful conduct.

2. Because patent infringement presupposes patent validity, knowledge of infringement requires knowledge of validity

Commil and the government contend that because direct infringement and patent invalidity are treated as distinct issues in some respects, a defendant's good-faith, reasonable belief that the patent is invalid is irrelevant in determining whether he acted with the required scienter for inducement. Pet. Br. 44-50; U.S. Br. 19-26. That theory fails because the wrong of patent

infringement presupposes the validity of the patent, and there can be no scienter if the accused inducer reasonably believes the patent invalid.

a. Commil and the government contend that their position is resolved by §271(b)'s use of the word "infringement." Pet. Br. 44; U.S. Br. 21. But the word "infringement" does not mark the metes and bounds of §271(b)'s *scienter* requirement. Indeed, in *Global-Tech*, the Court looked to the words "induce" and "actively"—not "infringement"—as the primary interpretative tools to discern the scope of §271(b)'s scienter requirement. 131 S. Ct. at 2065. Ultimately, the Court tied §271(b)'s scienter requirement to knowledge of "wrongdoing," *id.* at 2070—not abstract knowledge that the induced conduct practices the steps of a patent.

Once Commil's and the government's conflation of §271(b)'s scienter and "infringement" is removed, their challenges to allowing evidence of a good-faith belief of invalidity become irrelevant. It does not matter *for scienter purposes* whether direct infringement and patent invalidity are treated as separate legal issues for other purposes. U.S. Br. 22-23 (noting that "noninfringement" and "invalidity" defenses are codified in separate subsections, §282(b)(1) and §282(b)(2), respectively); *id.* 23-24 (citing case law on whether noninfringement moots validity; whether courts (or juries) can find a patent infringed and invalid; and whether failure to raise invalidity in response to a patentee's motion for summary judgment waives invalidity for future proceedings); Pet. Br. 44-50 (similar). Unless those distinctions somehow show that one who practices the steps of an invalid patent engages in "wrongdoing" or "violat[ion of the patentee's] rights," *Global-Tech*, 131 S. Ct. at 2070, they have no bearing on scienter. For good reason, neither Commil nor the govern-

ment contends that practicing the claims of an invalid patent constitutes "wrongdoing."

b. Moreover, even on their terms, Commil's and the government's efforts to show that infringement and patent validity are "separate" (Pet. Br. 44) or "distinct" (U.S. Br. 24) issues fall short. None of their proffered distinctions addresses the pertinent question: whether infringement *presupposes* patent validity. It clearly does.

i. Section 271 defines direct and induced "infringement" by reference to the patent being infringed, presupposing its validity:

> (a) [W]hoever without authority makes, uses, offers to sell, or sells any *patented* invention, within the United States or imports into the United States any *patented* invention during the term of the patent therefor, infringes *the patent*.
>
> (b) Whoever actively induces infringement *of a patent* shall be liable as an infringer.

(Emphases added). As used in §271, a "patent" is not merely a paper certificate. Rather, as this Court reiterated just last Term, a patent is defined by the rights it protects: "A patent is[] the conferral of rights in a particular claimed set of elements." *Limelight*, 134 S. Ct. at 2117; *see also* 35 U.S.C. §154(a)(1). Those rights exist only when the patent is valid; an invalid patent does not "entitle[] [its holder] to the privileges bestowed by" the Patent Act. *Deepsouth Packing Co.* v. *Laitram Corp.*, 406 U.S. 518, 522 (1972), *superseded by statute on other grounds*; *see also Actavis*, 133 S. Ct. at 2231. It follows that, in defining "infringement of a patent," Congress defined infringement of a *valid* patent.

See also H.R. Rep. No. 82-1923, at 9 ("[§271(a) wa]s not actually necessary because the granting clause [§154(a)(1)] creates certain exclusive rights and infringement would be any violation *of those rights*." (emphasis added)); S. Rep. No. 82-1979, at 8 (same).

That interpretation is consistent with the well-established understanding of "infringement," which has always meant an encroachment upon or violation of *legal right*. *E.g.*, *Black's Law Dictionary* 900 (10th ed. 2014) ("An act that interferes with one of the exclusive rights of a patent[.]"); *Black's Law Dictionary* 961 (3d ed. 1933) ("A breaking into; a trespass or encroachment upon; a violation of a law, regulation, contract, or right. Used especially of invasions of the rights secured by patents[.]"); *Webster's New International Dictionary of the English Language* 1277 (2d ed. 1945) ("An encroachment or trespass on a right or privilege; specif. ... [t]he unlawful manufacture, use, or sale of a patented or copyrighted article."). In all these definitions, infringement presupposes the existence of actual legal rights. In the patent context, that necessarily means that infringement presupposes the patent's validity.

ii. This Court has long recognized that invalidity renders patent claims void. *Brown* v. *Piper*, 91 U.S. 37, 44 (1875); *Dunbar* v. *Myers*, 94 U.S. 187, 200 (1876); *Permutit Co.* v. *Graver Corp.*, 284 U.S. 52, 58 (1931). Accordingly, where an allegedly infringing product "was not the subject of a valid patent, it follows that the defendants cannot be held as infringers." *Morgan Envelope Co.* v. *Albany Perforated Wrapping Paper*

Co., 152 U.S. 425, 435 (1894); *accord Actavis*, 133 S. Ct. at 2231.[24]

As Justice Black explained over seventy years ago without contradiction, "[t]here can be no infringement of a void patent." *Exhibit Supply Co.* v. *Ace Patents Corp.*, 315 U.S. 126, 137 (1942) (dissenting opinion). That was an uncontroversial description of pre-1952 case law. *See, e.g.*, *Miehle Printing Press & Mfg. Co.* v. *Publication Corp.*, 166 F.2d 615, 617 (7th Cir. 1948) ("[O]bviously, there can be no infringement of an invalid patent."); *Crowell* v. *Baker Oil Tools, Inc.*, 153 F.2d 972, 982 (9th Cir. 1946) ("[W]e sustain the findings and conclusion of invalidity; which means that there are no patents to infringe."); *Patent Specialties Corp.* v. *Price*, 54 F.2d 737, 738 (10th Cir. 1931) ("If plaintiff has no patent to infringe, there can be no infringement."); *Linde Air Prods. Co.* v. *Morse Dry Dock & Repair Co.*, 246 F. 834, 837 (2d Cir. 1917) ("[T]here can be no such thing as infringement of an invalid patent.").

The understanding that infringement presupposes a valid patent continued under the 1952 Patent Act. *See, e.g.*, *Ohio Citizens Trust Co.* v. *Lear Jet Corp.*, 403 F.2d 956, 959 (10th Cir. 1968); *Greening Nursery Co.* v. *J & R Tool & Mfg. Co.*, 376 F.2d 738, 742 (8th Cir. 1967); *Toro Mfg. Corp.* v. *Jacobsen Mfg. Co.*, 357 F.2d 901, 904 (7th Cir. 1966); *Johnson Fare Box Co.* v. *Na-*

---

[24] *Cardinal Chemical Co.* v. *Morton International, Inc.*, 508 U.S. 83 (1993) (cited at U.S. Br. 23-24), is not to the contrary. There, the Court merely held that a judgment of non-infringement does not moot validity issues on appeal if the defendant has counterclaimed for a declaratory judgment of invalidity. *Id.* at 98. That is sensible because the counterclaim confers appellate jurisdiction and the public has a strong interest in the eradication of invalid patents. *Id.* at 99-101. The decision does not address whether infringement presupposes the existence of a valid patent.

tional Rejectors, Inc., 269 F.2d 348, 353 (8th Cir. 1959); *Hoover Co.* v. *Mitchell Mfg. Co.*, 269 F.2d 795, 805 (7th Cir. 1959).

Consistent with this precedent, the Federal Circuit has repeatedly found that "[t]here can be no infringement of claims deemed to be invalid." *Marrin* v. *Griffin*, 599 F.3d 1290, 1295 (Fed. Cir. 2010); *accord Prima Tek II, LLC* v. *Polypap, S.A.R.L.*, 412 F.3d 1284, 1291 (Fed. Cir. 2005) ("[T]here can be no contributory or induced infringement of invalid patent claims."); *Specialty Rental Tools & Supply, Inc.* v. *Boyd's Bit Serv., Inc.*, 84 F. App'x 90, 96 (Fed. Cir. 2003) ("We affirm the jury's finding of no infringement because invalid claims cannot be infringed."); *Richdel, Inc.* v. *Sunspool Corp.*, 714 F.2d 1573, 1580 (Fed. Cir. 1983) ("The claim being invalid there is nothing to be infringed.").

In response, the government suggests that the Federal Circuit has "occasionally concluded that a particular patent was infringed but invalid." U.S. Br. 24 (citing *SmithKline Beecham Corp.* v. *Apotex Corp.*, 403 F.3d 1331 (2005)). But such outcomes at most recognize the practical reality that resolving a case on multiple grounds fosters efficiency. Hence, "in appropriate cases," the Federal Circuit "may address infringement after a conclusion of invalidity for the same reason that a district court may elect to do so—to aid appellate review and avoid a remand." *Weatherchem Corp.* v. *J.L. Clark, Inc.*, 163 F.3d 1326, 1336 (Fed. Cir. 1998). The same explanation disposes of the cases cited by the government (Br. 24) in which *juries* have found patents "infringed but invalid." Neither example undermines

the common sense notion that patent infringement presupposes patent validity.[25]

Finally, Commil and the government cherry-pick Federal Circuit cases suggesting—in the course of resolving procedural questions—that infringement and invalidity are "'separate ... issues.'" Pet. Br. 47 (quoting *Pandrol USA, LP* v. *Airboss Ry. Prods., Inc.*, 320 F.3d 1354, 1365 (Fed. Cir. 2003)); *see also* U.S. Br. 24-25 (similar). But these cases simply show that an infringement claim can be resolved against the plaintiff either because the accused infringer did not practice all the steps of the claimed invention or because the claimed invention was invalid (or both). It is similarly true that a defendant can prevail in a breach of contract action either because the contractual obligation was not breached or because there was no valid contract in the first place. *See, e.g., Central Tel. Co. of Va.* v. *Sprint Commc'ns Co. of Va.*, 715 F.3d 501, 517 (4th Cir. 2013) (elements of breach of contract); *Smith Flooring, Inc.* v. *Pennsylvania Lumbermens Mut. Ins. Co.*, 713 F.3d 933, 941 (8th Cir. 2013) (same). Yet no one would doubt that the breach of a contractual duty presupposes the existence of a valid contract.

3. Commil's and the government's remaining arguments fail

Commil and its amici contend that a finding of invalidity is merely a defense to liability (Pet. Br. 48-50;

---

[25] The government cites (Br. 24) *Fromson* v. *Advance Offset Plate, Inc.*, but in that case the Federal Circuit held the patent *valid*. 755 F.2d 1549, 1551 (Fed. Cir. 1985). And references to Judge Rich's dicta in a dissent (Pet. Br. 47; U.S. Br. 24) cannot outweigh a century's worth of consistent precedent from this Court and lower courts. *See supra* pp.41-43.

U.S. Br. 24; PhRMA Br. 5), but that view is unduly narrow. While a finding of invalidity is sufficient to defeat liability, it also has a broader effect: "[I]nvalidity operates as a complete defense to infringement for any product, forever." *Weatherchem*, 163 F.3d at 1335; *see also Blonder-Tongue Labs., Inc.* v. *University of Ill. Found.*, 402 U.S. 313, 349-350 (1971). This is so because invalidity renders the claim void and incapable of being infringed by anyone. *See supra* pp.41-43.

Commil notes (Br. 44-45) that infringement and invalidity are codified in different sections of the Patent Act (§271 and §282, respectively). The government similarly observes (Br. 22) that the defenses of "[n]oninfringement" and "invalidity"—which are available "in any action involving the validity or infringement of a patent," 35 U.S.C. §282(b)—are set forth in separate subsections of §282(b). But these observations merely confirm that a patentee can *lose* because the defendant did not practice the patent's claims or because the patent is invalid (or both). They do not support the inference that infringement can exist in a vacuum absent a valid patent or—as specifically relevant here—that one who reasonably believes in good faith that a patent is invalid engages in "wrongdoing" by encouraging another to perform the claimed steps. *See supra* pp.37-38.

Finally, there is no basis to Commil's contention (Br. 50-52) that the Federal Circuit's decision undermines the presumption of patent validity. The presumption of patent validity is not a presumption of liability. Rather, as this Court has explained, the presumption of validity exists to allocate the "burden of proof" of showing invalidity to the challenger and impose "a heightened standard of proof" to carry that

burden. *i4i*, 131 S. Ct. at 2246; *see also id.* at 2243. Nothing in the ruling below changes that.

B. Section 298 And Willful Infringement Precedent Confirm That Evidence Of A Good-Faith Belief Of Invalidity Is Relevant To The §271(b) Scienter Inquiry

Section 298, which Congress enacted as part of the AIA in 2011, provides additional evidence that a good-faith, reasonable belief of invalidity is relevant evidence in defending against a charge of indirect infringement. As explained above (*supra* pp.27-28), the premise of §298 is that opinions of counsel are relevant evidence of a defendant's "inten[t] to induce infringement." Further, the AIA's sponsors envisioned that §298 would address opinions of counsel on *validity* issues, not just opinions on whether a proposed process practices a patent. 157 Cong. Rec. S1374 (Mar. 8, 2011) (Sen. Kyl) (reflecting understanding that opinions of counsel can conclude that patents are "*invalid* or not infringed" (emphasis added)). Congress thus viewed opinions of counsel on patent validity as logically relevant to the scienter requirement for induced infringement—which makes sense only if a good-faith, reasonable belief of invalidity is relevant to the §271(b) scienter requirement.

Well-established precedent on willful infringement is also instructive. "[T]o establish willful infringement, a patentee must show ... that the infringer acted despite an objectively high likelihood that its actions constituted infringement of a *valid* patent." *In re Seagate Tech., LLC*, 497 F.3d 1360, 1371 (Fed. Cir. 2007) (en banc) (emphasis added); *see also Finisar Corp.* v. *DirecTV Group, Inc.*, 523 F.3d 1323, 1339 (Fed. Cir. 2008) ("[A] competent opinion of counsel concluding ... that [the patent] was invalid would provide a sufficient basis

... to proceed without engaging in objectively reckless behavior with respect to the ... patent."). But willful infringement requires only recklessness, *Seagate*, 497 F.3d at 1371, which is less demanding than the scienter for inducement—*i.e.*, actual knowledge or willful blindness, *Global-Tech*, 131 S. Ct. at 2068. It would be incongruous if evidence of a good-faith, reasonable belief of invalidity were relevant to the former but not the latter. The fact that willful infringement and induced infringement are treated *in pari materia* in §298, *see supra* p.27, confirms that Congress shared this view.

The government contends that the standards for willful infringement, being "judicially created," do not inform the construction of §271(b). U.S. Br. 28. But Congress specifically referenced the "willful[] infringe[ment]" standard in the text of §298. Given the extensive attention that willful infringement received in the years leading up to the enactment of the AIA,[26] Congress's incorporation of those standards in §298 without otherwise altering them is compelling proof of acquiescence.[27]

---

[26] *See, e.g.*, H.R. Rep. No. 112-98, at 39 & n.9 (citing *Seagate*); S. Rep. No. 111-18, at 10-13 (2009) (discussing codification of willfulness); S. 515, 111th Cong. §4(a) (Apr. 2, 2009); 155 Cong. Rec. S2715 (Mar. 3, 2009) (Sen. Hatch) (noting "considerable discussion with stakeholders in the patent community" about *Seagate* and sponsors' attempt to "incorporate correlating language into" proposed bill); S. 1145, 110th Cong. §4(a) (Jan. 24, 2008); S. Rep. No. 110-259, at 15-16 & n.66 (2008).

[27] There is no merit to the government's contention (Br. 28) that the scienter for willfulness should be "more culpable" than for inducement because the purpose of enhanced damages is "to punish those defendants whose conduct is egregious in a way that run-of-the-mine infringement is not." Induced infringement, unlike direct infringement, is not "run-of-the-mine infringement" (*id.*),

C. The Federal Circuit's Ruling Fosters Innovation Without Endangering Patent Rights

Under Commil's proposed rule, businesses like Cisco that sell commercially successful products will face an impossible dilemma after receiving a demand letter alleging that their products induce infringement. Even if a thorough investigation reveals that the patent (which is not directly infringed by the business) is likely invalid, the sender of such a letter will hold all the power. The recipient's options will be to take its products off the market, pay the patentee for a license, or face the prospect of costly and risky litigation without a meaningful opportunity to mount a scienter defense. If the recipient is a small business or early-stage company, there may be no choice at all. *See* Chien, *Startups and Patent Trolls*, 17 Stan. Tech. L. Rev. 461, 472-478 (2014) (analyzing impacts of infringement allegations on startup technology companies).

The risk that innovative, lawful products will be withheld or subject to significant royalty demands is particularly severe in high-technology industries. Successful modern products are often covered by a broad swath of issued patents. For example, estimates suggest that smartphones are covered by as many as 250,000 patent claims. Waters, *Tech Patent Arms War Reaches New Level of Intensity*, Financial Times, Mar. 31, 2011, at 16; Lohr, *A Bull Market in Tech Patents*, N.Y. Times, Aug. 17, 2011, at B1; *see also Jaffé* v. *Samsung Elecs. Co.*, 737 F.3d 14, 17 (4th Cir. 2013) (describing "the 'patent thicket' resulting from the overlapping rights of some 420,000 patents in the semiconductor industry"). Patent assertion entities are able to wait un-

---

but rather exceptional liability that is "premise[d] ... on purposeful, culpable expression and conduct." *Grokster*, 545 U.S. at 937.

til products become commercially successful and entrenched in the market, at which point it is more difficult and costly for a manufacturer to develop alternative designs; they then demand that the innovator pay royalties or face suit for infringement.

Yet a staggering percentage of issued patents are invalid. A recent study of Federal Circuit cases deciding the validity of patents between 2003 and 2009 found that only 40% of the patents were found valid—notwithstanding the statutory presumption of validity. Mann & Underweiser, *A New Look at Patent Quality*, 9 J. Empirical Legal Stud. 1, 7 (2012); *see also* Allison & Lemley, *Empirical Evidence on the Validity of Litigated Patents*, 26 AIPLA Q.J. 185, 205 (1998) (finding that 46% of patents were invalidated in litigation). For many of these patents, the claims are so broad that there is often no question that use of the accused product can practice the steps set forth in those claims, yet the claims are almost certainly invalid. Moreover, the law of patentability shifts periodically; this Court's recent decisions in *Alice Corp. Pty.* v. *CLS Bank International*, 134 S. Ct. 2347 (2014), and *Mayo Collaborative Services* v. *Prometheus Laboratories, Inc.*, 132 S. Ct. 1289 (2012), rendered a significant number of method patents vulnerable to challenge, even though the accused conduct almost certainly practiced the asserted claims. Providing patentees with the power that Commil requests will reduce beneficial challenges to patent validity, and will give undue power to those who hold broadly worded (and improvidently issued) patents. *Medtronic, Inc.* v. *Mirowski Family Ventures, LLC*, 134 S. Ct. 843, 851 (2014) ("[T]he 'public' also has a 'paramount interest in seeing that patent monopolies ... are kept within their legitimate scope.'").

Distinguishing between a belief of non-infringement and a belief of invalidity would also give rise to inexplicable results. An accused inducer may conclude, reasonably and in good faith, that a patent's claims do not cover its product if construed narrowly, and that if they were construed broadly enough to cover its product, the claims would be so broad as to be invalid. That often occurs when construing the patent's claims broadly would also cause the claims to sweep beyond the disclosed invention or to cover the prior art. *E.g.*, *Liebel-Flarsheim Co.* v. *Medrad, Inc.*, 481 F.3d 1371, 1378-1383 (Fed. Cir. 2007) (broad construction of patent claims urged by patentee rendered claims anticipated and not enabled); *MagSil Corp.* v. *Hitachi Global Storage Techs., Inc.*, 687 F.3d 1377, 1380-1385 (Fed. Cir. 2012) (same). In such a situation, there is no reason to treat the defendant's reasonable good-faith belief of non-infringement under a narrow claim construction any differently from a reasonable good-faith belief of invalidity under a broad claim construction; both are based on the fact that the defendant lacked specific, culpable intent to induce wrongdoing. Indeed, that is the very situation that arose in this case: Cisco was allowed to present its reasonable belief that Commil's claims should have been construed narrowly such that they would not cover WiFi products, yet was not allowed to offer evidence of its belief that, if the claims were construed more broadly, they would render the patent invalid.

In response, Commil and the government assert theoretical arguments speculating that the Federal Circuit's ruling will weaken patent rights in various ways. None of those contentions is persuasive.

The government remarkably ventures that "there is no indication that inducement liability has swept too

broadly." U.S. Br. 29. But a recent study shows that a record 5,411 patent infringement cases were filed in 2013, with the number of suits brought by non-practicing entities growing by almost 20% over the previous year. RPX Corporation, *2013 NPE Litigation Report* 10-11 (2014); *see also* PricewaterhouseCoopers, *2014 Patent Litigation Study* 2 (2014). It is unrealistic to believe that inducement suits are not part of this problem and would not dramatically multiply if Commil obtains the change in law it seeks.

Next, despite acknowledging the "public interest" in denying holders of invalid patents "'monopoly privileges'" (U.S. Br. 29), the government argues that this interest is not implicated here because evidence of a good-faith belief is only "outcome-determinative" when the patent is found valid. But that is true of any intent-based defense, which is only "outcome-determinative" when the required conduct elements are satisfied. Yet intent-based defenses serve a critical purpose: They limit liability to culpable conduct. That is especially important in inducement cases like this one, where Cisco risks being saddled with liability for the use by third parties of products that Commil *conceded* have substantial non-infringing uses. A6004; A6119.

In any event, contrary to the government's contentions, allowing evidence of a defendant's good-faith, reasonable belief of invalidity serves critical pro-competitive interests. It renders economically viable invalidity challenges that are reasonable, genuine, and often ultimately successful but that would never be brought (or litigated to judgment) under Commil's and the government's rule because the risks and costs of litigation would warrant changing the underlying product, succumbing to licensing demands, or exiting the market altogether. *See White House Report* 10 (de-

scribing non-litigation responses forced by PAEs' tactics); *id.* at 9 (noting "substantial litigation costs" and estimating median cost of $650,000 for smaller cases and over $5 million for cases exceeding $25 million in controversy). If one is serious about ensuring against "grant[ing] monopoly privileges to the holders of invalid patents," *Cardinal Chem. Co.* v. *Morton Int'l, Inc.*, 508 U.S. 83, 101 (1993), good-faith, reasonable challenges are precisely the ones that should be incentivized.

The government also suggests (Br. 30-32) that a good-faith belief of invalidity will be raised too often and involve issues that are too complicated, to the detriment of patent rights and at the risk of increasing the burdens of litigation. *See also* Pet. Br. 37-39. But as Commil recognizes (Br. 41), invalidity defenses are already common features of infringement litigation. Allowing a defendant to offer evidence of his reasonable good-faith belief of invalidity at the time of the alleged inducement does not meaningfully complicate the adjudication of these issues. It merely allows the defendant to present evidence that he already had a good-faith basis to believe in the same grounds for invalidity at a prior point in time.

Nor does the Federal Circuit's rule force a patentee to "disprove the inducer's *alleged* subjective belief that the patent was invalid." Pet. Br. 52 (emphasis added). To the contrary, the defendant must offer *evidence* of a reasonable, good-faith belief of invalidity; if he does not, then, consistently with *Global-Tech* and *Aro II*, the patentee can establish the required knowledge of infringement of a (presumptively) valid patent by proving that the defendant knew of (or was willfully blind to) the patent's existence and potential applicability. *See supra* pp. 17-19.

There is also no merit to Commil's and the government's fear that a defendant's good-faith showing will stand or fall based on his ability to offer opinion-of-counsel evidence. Pet. Br. 37; U.S. Br. 30-31. Such opinions are neither required nor *per se* sufficient. The good faith and reasonableness of a defendant's belief of invalidity depends on all relevant evidence. In any event, Congress specifically considered the use of opinions of counsel in both inducement and willfulness cases and addressed any perceived problem with a calibrated provision in the AIA. 35 U.S.C. §298; *supra* pp.27-29, 36.[28]

Commil's amici also assert that the Federal Circuit's rule might disadvantage brand-name drug manufacturers in litigation under the Hatch-Waxman Act. PhRMA Br. 7-11; AbbVie Br. 13-21; Gilead Br. 16-23; BIO Br. 18-20. These concerns are speculative and overblown. First, if a drug subject to an abbreviated new drug application ("ANDA") is covered by a composition patent claiming the drug's compound or by a method practiced by the manufacturer, inducement is irrelevant; a generic manufacturer selling the drug or practicing the method would be a *direct* infringer. *See*,

---

[28] Commil also fears that inducement defendants will "leverage" PTO findings that reexamination or *inter partes* review of a patent is appropriate. Pet. Br. 39-40. But the Federal Circuit has reserved judgment on the relevance of such evidence to "establish a good faith belief of invalidity." *VirnetX, Inc.* v. *Cisco Sys., Inc.*, 767 F.3d 1308, 1324 (Fed. Cir. 2014). In any event, the Federal Circuit has proven very capable of addressing any potential prejudice caused by such evidence. *See, e.g., id.* at 1324-1325; *SSL Servs., LLC* v. *Citrix Sys., Inc.*, 769 F.3d 1073, 1092-1093 (Fed. Cir. 2014) ("'[T]his court's precedent has often warned of the limited value of actions by the PTO' to establish a good faith belief of invalidity.").

e.g., *Sanofi-Synthelabo* v. *Apotex, Inc.*, 550 F.3d 1075, 1077 (Fed. Cir. 2008).

Second, the main goal of Hatch-Waxman litigation is to obtain *prospective* relief preventing the launch of the generic drug following the initial thirty-month stay of FDA approval. 21 U.S.C. §355(j)(5)(B)(iii) (FDA approval of the ANDA automatically stayed for at least thirty months after filing of infringement action). Good-faith beliefs of invalidity are irrelevant to prospective relief; once the litigation is concluded in the patentee's favor, there is no longer any good-faith belief of invalidity or non-infringement to be held. *See* Gilead Br. 19-20; *supra* p.34. The issue in this case will therefore only arise in Hatch-Waxman litigation if a generic company launches its drug "at risk" before the litigation is resolved—a scenario that is exceedingly rare. Carrier, *Payment After* Actavis, 100 Iowa L. Rev. 7, 27 (2014) (average of only four at-risk launches per year between 2003 and 2009). Even then, the patentee can seek a preliminary injunction against the launch. *Eli Lilly & Co.* v. *Teva Pharm. USA, Inc.*, 609 F. Supp. 2d 786, 791 (S.D. Ind. 2009) (granting preliminary injunction). Tellingly, amici have not identified a single generic launch for which the question presented here would have been outcome-determinative.

Finally, there is no merit to Commil's and the government's generalized alarm about under-enforcement of patent rights. Pet. Br. 36; U.S. Br. 32-33. As the government recognizes (Br. 32), the Federal Circuit's ruling imposes no limitation on the relief patentees can obtain against those who practice their inventions. Nor does it limit patentees' ability to stop defendants from inducing others to practice those inventions through injunctive relief, if and when the defendant's non-infringement and invalidity defenses are rejected. *See*

supra p.34. The only limitation imposed on patentees is that they will not be able to extract exorbitant damage awards from parties who neither practice a patent's claims nor know that their actions will induce *others* to practice the claims of a valid patent.[29]

In contrast, the rule proposed by Commil would leave innovative companies with no good option in responding to the abusive demands of patent assertion entities. The result would be doubly harmful. Commercially successful companies would be discouraged from challenging questionable patents, perpetuating the monopoly privileges enjoyed by holders of invalid patents. And resources that would otherwise be invested in innovation would be diverted to servicing those monopoly privileges in the form of license fees. Nothing in the Patent Act or this Court's jurisprudence warrants that result.

---

[29] The government also contends that the Federal Circuit's reasoning, if "taken to its logical conclusion," would permit a "plethora" of good-faith defenses beyond invalidity. U.S. Br. 32; *see also* Pet. Br. 41. But only a defendant's good-faith and reasonable belief that the patent's claims are invalid or unenforceable (for example, because of inequitable conduct) can negate the defendant's knowledge of "wrongdoing." *Global-Tech*, 131 S. Ct. at 2070; *see supra* pp.37-38. Ordinary defenses to liability that arise after the alleged inducement has occurred or in the course of litigation are irrelevant to the defendant's scienter under §271(b).

CONCLUSION

The judgment of the court of appeals should be affirmed.

Respectfully submitted.

JEFFREY E. OSTROW
HARRISON J. FRAHN IV
PATRICK E. KING
JONATHAN SANDERS
SIMPSON THACHER & BARTLETT LLP
2475 Hanover Street
Palo Alto, CA 94304

HENRY B. GUTMAN
SIMPSON THACHER & BARTLETT LLP
425 Lexington Avenue
New York, NY 10017

WILLIAM F. LEE
Counsel of Record
MARK C. FLEMING
FELICIA H. ELLSWORTH
ERIC F. FLETCHER
WILMER CUTLER PICKERING HALE AND DORR LLP
60 State Street
Boston, MA 02109
(617) 526-6000
william.lee@wilmerhale.com

SETH P. WAXMAN
FRANCESCO VALENTINI
WILMER CUTLER PICKERING HALE AND DORR LLP
1875 Pennsylvania Ave., NW
Washington, DC 20006

FEBRUARY 2015

REPLY BRIEF

Supreme Court, U.S.
FILED
MAR 2 0 2015
OFFICE OF THE CLERK

No. 13-896

In The
Supreme Court of the United States

COMMIL USA, LLC,
Petitioner,

v.

CISCO SYSTEMS, INC.,
Respondent.

ON WRIT OF CERTIORARI TO THE UNITED STATES COURT OF APPEALS FOR THE FEDERAL CIRCUIT

REPLY BRIEF OF PETITIONER

MARK S. WERBNER
Counsel of Record
RICHARD A. SAYLES
MARK D. STRACHAN
DARREN P. NICHOLSON
SAYLES | WERBNER P.C.
4400 Renaissance Tower
1201 Elm Street
Dallas, TX 75270
(214) 939-8700
mwerbner@swtriallaw.com

LESLIE V. PAYNE
NATHAN J. DAVIS
MIRANDA Y. JONES
HEIM, PAYNE & CHORUSH, LLP
JP Morgan Chase Tower
600 Travis, Suite 6710
Houston, TX 77002
(713) 221-2000

RULE 29.6 STATEMENT

The rule 29.6 statement included in Commil USA, LLC's opening brief remains correct.

TABLE OF CONTENTS

Page

RULE 29.6 STATEMENT i

TABLE OF CONTENTS ii

TABLE OF AUTHORITIES v

INTRODUCTION 1

I. A GOOD-FAITH BELIEF IN INVALIDITY IS NOT AND SHOULD NOT BE A DEFENSE TO INDUCED INFRINGEMENT .....

A. A Good-Faith Belief in Invalidity Is Never a Defense 4

1. A Good-Faith Belief in the Invalidity of a Statute Is No Defense 4

2. A Good-Faith Belief in the Invalidity of a Judicial Decree Is No Defense 5

3. A Good-Faith Belief in the Invalidity of a Contract Is No Defense to Tortious Interference 6

B. Judicial Creation of a Good-Faith Belief of Invalidity Defense Is Particularly Inappropriate Given the Presumption of Validity 8

C. Cisco's Attempt to Equate Invalidity and Infringement Does Not Withstand Scrutiny 10

II. GOOD-FAITH BELIEFS ARE IRRELEVANT BECAUSE INDUCED INFRINGEMENT ONLY REQUIRES KNOWING CONDUCT 12

A. Section 271(b) Does Not Require Scienter Higher Than Willfulness 12

B. This Court's Decision in *Global-Tech* Does Not Require Scienter Higher Than Willfulness 14

C. Fundamental Principles of Tort Law and Criminal Law Do Not Require Scienter Higher Than Willfulness 16

D. Congress Neither Enacted Nor Acquiesced to a Scienter Requirement Higher Than Willfulness 19

III. CISCO'S POLICY ARGUMENTS DO NOT SUPPORT THE CREATION OF A GOOD-FAITH BELIEF IN INVALIDITY DEFENSE TO INDUCEMENT 22

CONCLUSION 24

TABLE OF AUTHORITIES

Page(s)

CASES

Ancora Capital & Mgmt. Grp., LLC v. Corporate Mailing Servs., Inc., 214 F. Supp. 2d 493 (D. Md. 2002) 7

Aro Mfg. Co. v. Convertible Top Replacement Co., 377 U.S. 476 (1964) 14, 16

Blair v. United States, 250 U.S. 273 (1919) 6

Boehm v. United States, 123 F.2d 791 (8th Cir. 1941) 6

Cheek v. United States, 498 U.S. 192 (1991) .....*passim*

DSU Med. Corp. v. JMS Co., 471 F.3d 1293 (Fed. Cir. 2006)..... 15, 21, 22

eBay Inc. v. MercExchange, L.L.C., 547 U.S. 388 (2006) 10

Global-Tech Appliances, Inc. v. SEB S.A., 131 S. Ct. 2060 (2011) 14, 15, 16, 22

Gutierrez de Martinez v. Lamagno, 515 U.S. 417 (1995) 10

Highmark Inc. v. Allcare Health Mgmt. Sys., Inc.,
134 S. Ct. 1744 (2014) 23

In re Air Disaster at Lockerbie Scotland,
37 F.3d 804 (2d Cir. 1994), *cert. denied*,
513 U.S. 1126 (1995) 18

In re Seagate Tech., LLC,
497 F.3d 1360 (Fed. Cir. 2007).....13

Jerman v. Carlisle, McNellie,
Rini, Kramer & Ulrich LPA,
559 U.S. 573 (2010) 13, 16, 18

Liparota v. United States,
471 U.S. 419 (1985) 18

Manville Sales Corp. v. Paramount Sys., Inc.,
917 F.2d 544 (Fed. Cir. 1990).....15

Microsoft Corp. v. i4i Ltd. P'ship,
131 S. Ct. 2238 (2011) 9, 11

Octane Fitness, LLC v.
Icon Health & Fitness, Inc.,
134 S. Ct. 1749 (2014) 23

Rapanos v. United States,
547 U.S. 715 (2006) 22

Scutti Enters., LLC v. Park Place Entm't Corp.,
322 F.3d 211 (2d Cir. 2003).....7

Spectra-Physics, Inc. v. Coherent, Inc.,
827 F.2d 1524 (Fed. Cir. 1987).....11

Teva Pharm. USA, Inc. v. Sandoz, Inc.,
135 S. Ct. 831 (2015) 10

United States v. Ambort,
405 F.3d 1109 (10th Cir. 2005) 4, 18

United States v. Bailey,
444 U.S. 394 (1980) 18

United States v. Burton,
737 F.2d 439 (5th Cir. 1984) 4-5

United States v. Kraeger,
711 F.2d 6 (2d Cir. 1983) 5

United States v. Pearce,
792 F.2d 397 (3d Cir. 1986) 6

STATUTES

26 U.S.C. § 6213 5

26 U.S.C. § 7422 5

26 U.S.C. § 7482(a)(1) 5

35 U.S.C. § 271 17

35 U.S.C. § 271(b) ..... *passim*

35 U.S.C. § 282(a) 2, 8

35 U.S.C. § 284 13

35 U.S.C. § 285 23

35 U.S.C. § 298 ..... 19, 21

35 U.S.C. § 302 9

35 U.S.C. § 316 9

Model Penal Code § 2.02 18

Model Penal Code § 2.02(1) 18

Model Penal Code § 2.02(2) 18

RULE

Fed. R. Civ. P. 11 23

OTHER AUTHORITIES

157 Cong. Rec. S1374 (daily ed. Mar. 8, 2011) 21

17 Am. Jur. 2d *Contempt* § 131 6

Contributory Infringement: Hearings on H.R. 3866 before Subcomm. No. 4 of the H. Comm. on the Judiciary, 81st Cong. 83 (1949) 13

H.R. Rep. No. 112-98 (2011) 20

W Keeton, D. Dobbs, R. Keeton & D. Owen, *Prosser and Keeton on Law of Torts* (5th ed. 1984) 7

Restatement of Torts § 766 (1939) 7

Restatement of Torts § 876(a) (1939) 17

Restatement of Torts § 876(b) (1939) 17

Restatement of Torts § 890 (1939)..... 7

Restatement (Second) of Torts § 766 (1979)..... 7

The Federalist No. 10 (C. Rossiter ed. 1961) 10

In The

Supreme Court of the United States

No. 13-896

COMMIL USA, LLC,

Petitioner,

v.

CISCO SYSTEMS, INC.,

Respondent.

ON WRIT OF CERTIORARI
TO THE UNITED STATES COURT OF APPEALS
FOR THE FEDERAL CIRCUIT

REPLY BRIEF FOR PETITIONER

INTRODUCTION

The question presented in this case is whether an infringer's good-faith belief in a patent's *invalidity* precludes liability for induced infringement. Like the court of appeals, Cisco first urges that a defendant's belief that the conduct is not *infringing* negates scienter. Second, and critically, Cisco then attempts to extend that position by equating a belief that the patent is *not*

infringed with a belief that the patent is *not valid*. While Cisco's position falters at the first step – a good-faith belief that the conduct is not infringing should not defeat induced infringement – its position on the second step is fatally flawed for independent reasons. Whatever standard might govern when a defendant believes his conduct is lawful, the law has never excused a defendant from liability merely because he believes (however firmly) that the prohibition on his conduct is invalid. A defendant who violates a criminal statute cannot invoke a good-faith belief that the statute is invalid to avoid punishment. A party who violates a court order cannot avoid contempt by arguing that he had a good-faith belief that the order was invalid. And a defendant who tortiously interferes with a contract cannot avoid liability based on a good-faith belief that the contract is invalid or unenforceable. The offender's good-faith belief in invalidity is "irrelevant." *Cheek v. United States*, 498 U.S. 192, 206 (1991).

Patent law should be no different. Indeed, allowing a good-faith belief in invalidity would be particularly inappropriate in the patent context because Congress has already decided that "[a] patent shall be *presumed valid*." 35 U.S.C. § 282(a) (emphasis added). Cisco's proposed defense would turn that presumption on its head. It would instruct parties to presume the patent valid *unless* they think in good faith that the patent is invalid, in which case they will be excused from liability for inducing infringement – no matter how injurious – even though the patent in fact is valid. That is not, and should not be, the law. Cisco's similar efforts to

equate invalidity with non-infringement (on the theory that one cannot infringe an invalid patent) are foreclosed for similar reasons. Cisco's argument would apply equally to the numerous other areas of law where a good-faith belief in invalidity is no excuse.

The good-faith defense fails for additional reasons. It enables one to actively induce others to practice a *valid* patent – with knowledge that patents are statutorily presumed valid – yet bear no "liabil[ity] as an infringer" solely because of a *mistaken* belief that the patent is invalid. This dramatic departure from bedrock principles of patent law provides inducers with immunity when they trespass on valid patent rights. Such a judicial re-interpretation of the law will eviscerate a remedy that has existed for well over a century. Potential patent defendants who believe a patent invalid have myriad (and streamlined) procedures available to them to obtain an actual adjudication of validity, both before the PTO and in court. There is no good reason to create a defense for infringers based on supposed beliefs about validity when Congress has provided ample means for testing such beliefs.

I. A GOOD-FAITH BELIEF IN INVALIDITY IS NOT AND SHOULD NOT BE A DEFENSE TO INDUCED INFRINGEMENT

In pressing its view that knowledge of infringement is a necessary element of induced infringement, Cisco invokes "background principles of tort and criminal law." Br. 24-27. Whatever the merits of those arguments with respect to knowledge

of infringement, they show precisely why there is no defense of good-faith belief in invalidity: Throughout the law, a good-faith belief in invalidity – whether it be of a statute, judicial decree, or contract – is no defense. And it would be particularly inappropriate to judicially interpose such a defense in the patent context, where Congress has directed that patents are presumed valid.

A. A Good-Faith Belief in Invalidity Is Never a Defense

1. A Good-Faith Belief in the Invalidity of a Statute Is No Defense

This Court's precedent makes clear that a defendant cannot invoke a good-faith belief – however reasonable – that a statute is invalid as a defense to a criminal prosecution. In *Cheek v. United States*, the Court addressed whether a defendant's good-faith belief that certain provisions of the tax code were unconstitutional could be used to demonstrate that the defendant's violations were not "willful." 498 U.S. at 205-06. This Court squarely and unequivocally rejected that defense: "[A] defendant's views about the validity of the tax statutes," this Court explained, "are *irrelevant* to the issue of willfulness." *Id.* at 206 (emphasis added). That is true, moreover, regardless of "whether the claims of invalidity are frivolous or have substance." *Id.*[1]

---

[1] *See also United States v. Ambort*, 405 F.3d 1109, 1116 (10th Cir. 2005) (applying *Cheek* to aiding and abetting willful tax violations); *United States v. Burton*, 737 F.2d 439, 442 (5th Cir.

A party who disagrees with a statute's validity must instead utilize "mechanisms provided by Congress to present his claims of invalidity to the courts and to abide by their decisions." *Cheek*, 498 U.S. at 206. In *Cheek*, for example, the defendant could have "pa[id] the tax that the law purported to require, file[d] for a refund and, if denied, present[ed] his claims of invalidity, constitutional or otherwise, to the courts." *Id.* (citing 26 U.S.C. § 7422). Or he could have "challenged claims of tax deficiencies in the Tax Court" and appealed if unsuccessful. *Id.* (citing 26 U.S.C. §§ 6213, 7482(a)(1)). But he could not violate the statute with impunity merely because he carried a good-faith belief that the statute was invalid. A defendant who chooses to do so, "like defendants in criminal cases in other contexts who 'willfully' refuse to comply with the duties placed upon them by the law must take the risk of being wrong." *Id.*

2. *A Good-Faith Belief in the Invalidity of a Judicial Decree Is No Defense*

Cheek's principle – that one may not stand in judgment of the law and then plead lack of intent when proven wrong – permeates American law. For example, a party may defend a charge of contempt

---

1984) ("The defendant's good faith belief that the statute is unconstitutional does not negate the willfulness of his defiance of the statute, and such a defendant is not entitled to a jury instruction that his belief in the statute's unconstitutionality shields him from liability for willful violation of the statute."); *United States v. Kraeger*, 711 F.2d 6, 7 (2d Cir. 1983) ("[A] good faith belief that a law was unconstitutional was no defense to the charge of failing to file an income tax return.").

by arguing that the court order the party violated is invalid. But it is black-letter law that "[a] good-faith belief" that a court order "is invalid is *not* a defense to contempt." 17 Am. Jur. 2d *Contempt* § 131 (emphasis added); *see Blair v. United States*, 250 U.S. 273, 277-78 (1919) (witnesses guilty of contempt for refusing to testify based on the belief that the criminal statute at issue "was unconstitutional and void"); *cf. Boehm v. United States*, 123 F.2d 791, 809 (8th Cir. 1941) ("One who takes an oath to tell the truth and thereupon swears falsely cannot defend against indictment for perjury on the ground that he believed the statute authorizing the taking of his testimony was unconstitutional.").

"Under current doctrine," the Third Circuit has explained, "defendants defying court orders gamble that they will be able to establish the invalidity of the order at contempt proceedings." *United States v. Pearce*, 792 F.2d 397, 400 n.3 (3d Cir. 1986). "If it turns out that the order was valid, the defendant is guilty of contempt and cannot successfully advance as a defense his good-faith belief that the order was invalid." *Id.* A contrary rule "would encourage frequent disobedience of court orders." *Id.*

3. A Good-Faith Belief in the Invalidity of a Contract Is No Defense to Tortious Interference

The same principle applies in tort law. For example, in a claim of tortious interference with a contract, the invalidity or unenforceability of the

contract is a defense. *See Scutti Enters., LLC v. Park Place Entm't Corp.*, 322 F.3d 211, 215 (2d Cir. 2003) ("a central requirement" for a claim for tortious interference with contract is a "valid, enforceable contract"). But a defendant's good-faith belief that the contract was invalid or unenforceable is *not* a defense. *See, e.g., Ancora Capital & Mgmt. Grp., LLC v. Corporate Mailing Servs., Inc.*, 214 F. Supp. 2d 493, 499 (D. Md. 2002) ("A defendant's wrongful belief that a contract is invalid or unenforceable is not a defense to a tortious interference claim."); *Restatement of Torts* § 766, cmt. e (1939) ("If he knows those facts, he is subject to liability even though he is mistaken as to their legal significance and believes that there is no contract. ..."); *Restatement (Second) of Torts* § 766, cmt. i (1979) ("If he knows those facts, he is subject to liability even though he is mistaken as to their legal significance and believes that the agreement is not legally binding...."); *cf. Restatement of Torts* § 890, cmt. f (1939) ("A person who, no matter how reasonably, believes because of a mistake of law that he has a privilege, gains no immunity merely because of such belief "); W. Keeton, D. Dobbs, R. Keeton & D. Owen, *Prosser and Keeton on Law of Torts* 110 (5th ed. 1984) ("[I]f one intentionally interferes with the interests of others, he is often subject to liability notwithstanding the invasion was made under an erroneous belief as to some legal matter that would have justified the conduct.").

The example of tortious interference is particularly salient. While a good-faith belief that one's *conduct* does not interfere with a contract may preclude liability for tortious interference (Resp. Br.

44), one's belief that contract is *invalid* will not. Likewise here, whatever the relevance of a defendant's good-faith belief that his *conduct* does not infringe, any belief that the patent is *invalid* should be irrelevant.

B. Judicial Creation of a Good-Faith Belief of Invalidity Defense Is Particularly Inappropriate Given the Presumption of Validity

Simply put, Cisco asks for a rule that does not operate elsewhere in the law. Even if § 271(b) requires that a defendant have knowledge of the infringing nature of the induced acts, a good-faith belief in invalidity should be "irrelevant" to a defendant's liability under that provision. *Cheek*, 498 U.S. at 206. Just as the defendant in *Cheek* had the requisite knowledge that his conduct violated the law, despite his belief that the statute was invalid (*id.*), so too an accused infringer may be aware of the infringing nature of the induced acts despite his belief that the patent is invalid. Judicial creation of such a defense would be particularly inappropriate here. Under § 271(b), a defendant who "actively induces infringement of a patent shall be liable as an infringer." 35 U.S.C. § 271(b). Nowhere does the statute set forth an exception for inducers who believe in good-faith the patent is invalid.

Indeed, such a defense would be inconsistent with the presumption of validity. Because "[a] patent shall be *presumed valid*," 35 U.S.C. § 282(a) (emphasis added), parties and courts must respect the issued patent's validity until a court or the PTO

rules otherwise. As this Court recently confirmed in *Microsoft Corp. v. i4i Ltd. P'ship*, 131 S. Ct. 2238 (2011), the presumption of validity is a "common core of thought and truth" reflected in over 100 years of American jurisprudence. *Id.* at 2245. The presumption is a powerful tool: It "requires an invalidity defense to be proved by clear and convincing evidence" rather than a preponderance of evidence. *Id.* at 2242. Under Cisco's view, however, the presumption of validity is meaningless when a defendant is accused of induced infringement because a defendant can simply ignore that *statutory* presumption in favor of its *own* assessment of a patent's invalidity.

Rather than making their own assessment, accused infringers have a variety of options that allow them to properly challenge a patent's validity. They can file a declaratory judgment action seeking a court declaration that the patent is invalid. They can seek *inter partes* review and receive a decision within 12 months of institution (or 18 months if "good cause" is shown). 35 U.S.C. § 316. Or they can seek *ex parte* reexamination, as Cisco sought. 35 U.S.C. § 302. What an accused infringer cannot do, however, is ignore "mechanisms provided by Congress to present his claims of invalidity to the courts and to abide by their decisions." *Cheek*, 498 U.S. at 206. To allow an accused infringer to by-pass these mechanisms and rely, instead, on his own determination of validity violates the fundamental maxim that "[n]o man is allowed to be a judge in his own cause because his interest would certainly bias his judgment and, not improbably, corrupt his integrity." *Gutierrez de Martinez v. Lamagno*, 515

U.S. 417, 428 (1995) (quoting The Federalist No. 10, p. 79 (C. Rossiter ed. 1961)).

Cisco, in essence, asks this Court to carve out a patent law exception from the general rule that a good-faith belief in invalidity is not a defense. But this Court, in case after case, has rejected the proposition that unique, patent specific rules should govern where they depart from general principles applicable in other areas of law. *See, e.g.*, *Teva Pharm. USA, Inc. v. Sandoz, Inc.*, 135 S. Ct. 831, 835 (2015) (district court fact-finding during claim construction reviewed by this Court for clear error, "as it would review a trial judge's fact-finding in other cases"); *eBay Inc. v. MercExchange, L.L.C.*, 547 U.S. 388, 394 (2006) ("[W]hether to grant or deny injunctive relief rests within the equitable discretion of the district courts, and . such discretion must be exercised consistent with traditional principles of equity, in patent disputes no less than in other cases governed by such standards."). This Court should do so here and bring patent law into line with other areas of the law.

C. Cisco's Attempt to Equate Invalidity and Infringement Does Not Withstand Scrutiny

Unable to cite even a single other area of law that adopts its novel theory that a good-faith belief of invalidity is a legitimate defense, Cisco instead equates invalidity with infringement, urging that "infringement presupposes the patent's validity." Resp. Br. 41; *see also id.* at 42 ("infringement

presupposes a valid patent"). That argument fails for two independent reasons.

First, Cisco's reasoning would apply equally in other contexts, destroying the rule that a good-faith belief in invalidity is not a defense. If this view were correct, the defendant in *Cheek* would have prevailed because a statutory violation "presupposes the [statute's] validity." Likewise, contempt would "presuppose" the validity of the underlying court order. And tortious interference with a contract would "presuppose" the validity of a contract. In those areas of the law, however, a good-faith belief in invalidity is *not* a defense. *See supra* pp. 4-8. If the statute, judicial order, or contract later turns out to be invalid, then a party will not be liable. But Cisco's argument goes much further. It would upend the longstanding rule that a good-faith belief in invalidity is not a defense and allow parties to immunize themselves from violating the rights of others based on the mistaken view that a patent is invalid. That cannot be the law.

Second, infringement and invalidity are entirely separate issues, with different presumptions, burdens of persuasion, and burdens of proof. *See i4i*, 131 S. Ct. at 2245 n. 4. And they have been repeatedly and consistently treated as separate by the Federal Circuit. *See* Pet. Br. 46-48. While it is undoubtedly true that *liability* requires the infringement of a valid patent, one inquiry does not depend upon the other and infringement does not "presuppose[] the patent's validity." Resp. Br. 41; *see Spectra-Physics, Inc. v. Coherent, Inc.*, 827 F.2d 1524, 1535 (Fed. Cir. 1987) (describing the

statement that "invalid claims cannot be infringed" as "a nonsense statement").

II. GOOD-FAITH BELIEFS ARE IRRELEVANT BECAUSE INDUCED INFRINGEMENT ONLY REQUIRES KNOWING CONDUCT

Cisco's arguments fail for the additional reason that the very premise on which they stand – that good-faith beliefs are relevant to the inducement inquiry – is wrong. Cisco argues (Br. 11) that the scienter requirement for induced infringement is *higher* than the scienter for willfulness, that induced infringement requires not just "knowledge" of the patent and the infringing nature of the conduct, but "specific, culpable intent," which is negated when a defendant "reasonably and in good faith believes that the patent is invalid." Br. 3. But elevating the scienter required for induced infringement to a quasi-criminal standard is wholly unsupported by the statutory text, this Court's precedent, and fundamental principles of American tort and criminal law.

A. Section 271(b) Does Not Require Scienter Higher Than Willfulness

Cisco's assertion (Br. 11) that "the scienter for willfulness is lower than for inducement" demonstrates the fundamental flaw in its understanding of inducement. Section 271(b) imposes liability on "[w]hoever actively induces infringement of a patent." It does not use the word intent, much less willful, and no court has ever held that § 271(b) requires a showing of willfulness, much

less something *more* than willfulness. In fact, Congress considered and rejected a proposal to change the standard in § 271(b) from "actively induces" to "willfully induces." *Contributory Infringement: Hearings on H.R. 3866 before Subcomm. No. 4 of the H. Comm. on the Judiciary*, 81st Cong. 83 (1949).[2] The absence of express statutory authorization for "willfulness" or some higher standard in § 271(b) is telling because this Court has long looked for explicit congressional authorization before permitting defenses based on mistaken beliefs. *See, e.g., Jerman v. Carlisle, McNellie, Rini, Kramer & Ulrich LPA*, 559 U.S. 573, 581 (2010) ("We have long recognized the 'common maxim, familiar to all minds, that ignorance of the law will not excuse any person, either civilly or criminally" and noting that "when Congress has intended to provide a mistake-of-law defense to civil liability, it has often done so . explicitly"); *Cheek*, 498 U.S. at 199 (noting express congressional authorization to "mak[e] specific intent to violate the law" an element of the offense).

To be sure, when determining the availability of treble damages under 35 U.S.C. § 284, the Federal Circuit applies a judicially created willfulness standard. *See In re Seagate Tech., LLC*, 497 F.3d 1360 (Fed. Cir. 2007) (en banc). But adopting Cisco's heightened scienter requirement would compel the conclusion that every defendant found liable for inducement is subject to treble damages and attorney fees. Nothing in the statute, legislative history, or this Court's precedent suggests that induced infringement *liability* was intended to be

---

[2] *See* Amicus Gilead Br. 9.

limited to only the most egregious circumstances that warrant punitive damages. To the contrary, the legislative history and this Court's early cases show that the purpose was to provide patentees with a remedy in circumstances where it is impracticable to proceed against diffuse direct infringers. *See* Pet. Br. at 29-34.

B. This Court's Decision in *Global-Tech* Does Not Require Scienter Higher Than Willfulness

Nothing in *Global-Tech* imposes such a heightened scienter requirement. Instead, the Court inferred from the words "actively induces" that "at least some intent is required." *Global-Tech Appliances, Inc. v. SEB S.A.*, 131 S. Ct. 2060, 2065 (2011). It then proceeded to adopt the rule from *Aro Mfg. Co. v. Convertible Top Replacement Co.*, 377 U.S. 476 (1964) [*Aro II*] that knowledge of the patent was required. *Id.* at 2067-68. Commil's proposed standard is consistent with the statutory text and *Global-Tech*.[3]

The question is not whether this Court should overrule *Global-Tech*, but whether this Court's

---

[3] Under Commil's approach, one does not commit inducement unless (1) the inducer intended to cause third parties to directly infringe the patent; (2) third parties in fact directly infringed the patent; (3) the inducer knew about the patent; and (4) the inducer knew about the patent's relevance to its conduct. Moreover, one cannot incur any liability for inducement under Commil's approach unless the patent is also found to be valid and enforceable. Commil's standard represents a sensible balance between the rights of patent owners and those who cause infringement.

reference to "knowledge that the induced acts constitute patent infringement" created the radical and unprecedented defense to liability that Cisco suggests – a defense that only applies to accused infringers who have *actual knowledge* of the patent. 131 S. Ct. at 2068.[4] Cisco goes so far as to argue that this Court's decision in *Global-Tech* "over-ruled a portion of *DSU* [*Med. Corp. v. JMS Co.*, 471 F.3d 1293 (Fed. Cir. 2006)] and *Manville* [*Sales Corp. v. Paramount Systems, Inc.*, 917 F.2d 544 (Fed. Cir. 1990)] that had been too permissive with respect to inducement liability," even though this Court neither cited nor discussed either decision. Br. 30 n.20.

To temper the extreme but unavoidable implication of its position – that § 271(b) will be eviscerated as a meaningful remedy – Cisco now argues that only "reasonable beliefs" about invalidity provide a defense to inducement intent. *E.g.*, Resp. Br. 36 n.23.[5] Of course, a defendant with good-faith but unreasonable beliefs about validity or infringement can hardly be said to have "knowledge that the induced acts constitute patent

---

[4] Cisco claims that Commil waived its argument that § 271(b) requires a showing of actual knowledge of the patent and its potential relevance rather than "knowledge of infringement." Resp. Br. 2. Like the United States (U.S. Br. 9, n. 1) Commil argues the point because it is antecedent to the issue squarely before the Court. It was the rationale on which the Federal Circuit created the "good-faith belief in invalidity" defense.

[5] By its suggestion that the Court insert a "reasonable" requirement in the Federal Circuit's new defense, Cisco acknowledges that the Federal Circuit defense as announced is wrong.

infringement" much less to have acted with the "specific, culpable, intent" that Cisco says is required. Resp. Br. 3; *cf.* Resp. Br. 21 (Cisco criticizing Commil's position because it "would not require knowledge that the induced conduct actually constitutes 'infringement.'"). And in the limited instances where mistaken beliefs are permitted as a defense to negate specific intent, those defenses are permitted "however unreasonable a court might deem such a belief." *Cheek*, 498 U.S. at 202.

Clearly, the "knowledge that the induced acts constitute patent infringement" required by *Global-Tech*, 131 S. Ct. at 2068, exists where the inducer has knowledge of the patent and its relevance to its conduct. This conclusion is compelled by the context of the actual dispute presented in *Global-Tech*, the Court's reasoning and holding in *Aro II*, additional early cases from this Court, and the purpose of inducement liability. *See* Pet. Br. 21-27; *see also Jerman*, 559 U.S. at 582-83 ("Our law is therefore no stranger to the possibility that an act may be 'intentional' for purposes of civil liability, even if the actor lacked actual knowledge that her conduct violated the law.")

C. Fundamental Principles of Tort Law and Criminal Law Do Not Require Scienter Higher Than Willfulness

Cisco further argues that a heightened scienter requirement for inducement is supported by tort law and criminal law because "aiding and abetting" generally requires "proof of knowledge of

another's wrongdoing and intent to assist the wrongdoing." Br. 25. Both arguments are misplaced.

First, with respect to tort law, Cisco relies upon § 876(b) of the *Restatement of Torts* (1939), which imposes liability for aiding and abetting on one who "knows that the other's conduct constitutes a breach of duty and gives substantial assistance or encouragement to the other so to conduct himself." Br. 25. Thus, according to Cisco, common law aiding and abetting necessitates "knowledge of wrongdoing in order to hold a defendant liable." Br. 26. But Cisco largely ignores the more salient provision § 876(a), which imposes liability for aiding and abetting on one who "orders or induces such conduct, knowing of the conditions under which the act is done or intending the consequences which ensue." As Amicus Gilead's compelling analysis shows (Br. 4-10), § 271(b) was derived from a common law doctrine that did *not* require knowledge of wrongdoing. Rather, "[t]ort law imposed a sliding scale for the required mental state based on the culpability of the defendant's conduct. The more culpable the conduct, the less serious the required mental state, and vice-versa." Gilead Br. 5-6. Section 271's structure mirrors this relationship between the requisite mental state and the culpability of the conduct (Gilead Br. 8-10), and is consistent with the approach offered by Commil and the Solicitor General.

Cisco also ignores the symmetry between conduct and mental state in the criminal law, which (if even applicable) makes plain that Cisco's invocation of "belief" is very different from the intent

or *mens rea* ordinarily required for the commission of a crime. Criminal culpability is based on the actor's mental state in relation to the conduct at issue. *See* Model Penal Code § 2.02, cmt. 1, at 229 (Official Draft and Revised Comments 1985). Under the Model Penal Code, the actor's culpability turns on whether he acted purposely, knowingly, recklessly, or negligently. § 2.02(2); *see also Liparota v. United States*, 471 U.S. 419, 424 n.5 (1985). Under the criminal law a person acts "knowingly" with respect to a material element of the offense if he is "aware" that his conduct is of a particular nature, that the relevant circumstances exist, or that his conduct is practically certain to cause the specified result. Model Penal Code § 2.02(1); *United States v. Bailey*, 444 U.S. 394, 404 (1980).

Thus, knowledge in the criminal context is a matter of cognition, not a matter of opinion, judgment, or belief. Accordingly, when knowledge of the law is required, a defendant's *belief* that the law is invalid does not negate that his violation of the law was a *knowing* one. *Cheek v. United States*, 498 U.S. 192, 207 (1991); *Ambort*, 405 F.3d at 1114 (applying *Cheek* to aiding and abetting willful tax violations); *see also Jerman*, 559 U.S. 573 (a debt collector's mistaken interpretation of legal requirements is not a bona fide error defense); *In re Air Disaster at Lockerbie, Scotland*, 37 F.3d 804 (2d Cir. 1994), *cert. denied*, 513 U.S. 1126 (1995) (applying *Cheek* to Warsaw Convention suit for damages resulting from willful violation of FAA regulations).

These authorities demonstrate why Cisco's repeated insistence that it lacked the requisite "culpable conduct" is so misplaced. Resp. Br. 22, 36-37. It *is* "culpable conduct" to violate a criminal statute, disregard a court order, or interfere with a contract, even if you believe, in good-faith, that the underlying statute, order, or contract is invalid. Likewise, causing others to violate a patent that you know about but believe to be invalid is no less culpable.

D. Congress Neither Enacted Nor Acquiesced to a Scienter Requirement Higher Than Willfulness

Cisco points to the Leahy-Smith America Invents Act, which added 35 U.S.C. § 298 "Advice of Counsel" as one of a series of patent reforms, as evidence that a "good-faith belief of invalidity" is relevant to the inducement inquiry. Br. 27-31, 46-47. Section 298 prevents evidence or argument that an alleged infringer *failed* "to obtain the advice of counsel" from being introduced to prove willfulness or inducement. Cisco argues (Br. 27-28) that the "premise of this provision is that a failure to obtain an opinion of counsel can be relevant evidence of a defendant's intent to induce" and that finding "good-faith beliefs" irrelevant would, for some reason, make § 298 superfluous. That is not so.

Section 298 was plainly aimed at protecting the attorney-client relationship and removing pressure on defendants to (1) waive their attorney-client privilege and (2) obtain opinion of counsel

letters that are inherently suspect. As the final Committee Report explains (with Cisco's selective quotation (Br. 28) italicized):

> The Act includes a new provision [§ 298] that bars courts and juries from drawing an adverse inference from an accused infringer's failure to obtain opinion of counsel as to infringement or his failure to waive privilege and disclose such an opinion. Section 298 of title 35 is designed to protect attorney-client privilege and to *reduce pressure on accused infringers to obtain opinions of counsel for litigation purposes.* It reflects a policy choice that the probative value of this type of evidence is outweighed by the harm that coercing a waiver of attorney-client privilege inflicts on the attorney-client relationship. Section 298 applies to findings of both willfulness and intent to induce infringement—and thus legislatively abrogates the Federal Circuit's decision in *Broadcom Corp. v. Qualcomm Inc.*

H.R. Rep. No. 112-98, at 53 (2011). And if there were any doubt about Congress's views on the relevance and probative value of opinion of counsel letters, it can be found in Senator Kyl's statement (with Cisco's selective quotation (Br. 46) italicized):

> Permitting adverse inferences from a failure to procure an opinion or waive

> privilege undermines frank communication between clients and counsel. It also feeds the cottage industry of providing such opinions—an industry that is founded on an unhealthy relationship between clients and counsel and which amounts to a deadweight loss to the patent system. Some lawyers develop a lucrative business of producing these opinions, and inevitably become aware that continued requests for their services are contingent on their opinions always coming out the same way—that the patent is *invalid or not infringed.* Section 298 reflects legislative skepticism of the probative value of such opinions.

157 Cong. Rec. S1374 (daily ed. Mar. 8, 2011) (statement of Sen. Kyl). Accordingly, § 298 at most establishes a congressional conclusion that it is undesirable to put attorney-client communications at issue in litigation, particularly where those communications are more likely to be self-serving than forthright.

Finally, Cisco's claim (Br. 29-31) of congressional acquiescence to what it asserts was a longstanding intent standard does not withstand scrutiny. There has been a lack of a clear intent standard to which Congress could acquiesce because the Federal Circuit's interpretation of that standard has changed. Prior to *DSU*, there was a 15-year conflict in the Federal Circuit. That conflict was

resolved by requiring that "the defendant *knew or should have known* that its actions would induce actual infringement." 971 F.3d at 1366 (emphasis added). The "knew or should have known standard" remained until the Federal Circuit panel opinion in this case held that *Global-Tech* rendered erroneous a jury instruction on intent approved by *DSU*. Pet. App. 20a-21a. Consequently, it would be pure speculation as to Congress's position on the intent standard in § 271(b). *See Rapanos v. United States*, 547 U.S. 715, 749 (2006) (noting this Court's "oft-expressed skepticism toward reading the tea leaves of congressional inaction").

III. CISCO'S POLICY ARGUMENTS DO NOT SUPPORT THE CREATION OF A GOOD-FAITH BELIEF IN INVALIDITY DEFENSE TO INDUCEMENT

Finally, Cisco's proposed new defense has little to do with "patent assertion entities" and nothing to do with "bogus licensing demands." *See* Resp. Br. 31-33.

First, substantive patent law does not discriminate based on the identity of the patent owner. Section 271(b) applies to all patent owners, regardless of whether they (a) make and sell products that practice the patented invention; (b) make and sell products that do not practice the patented invention; (c) made and sold patent-practicing products in the past but went out of business (perhaps due to a dominant industry participant entering the market with infringing versions of the patented products); or (d) provided

liquidity to an original inventor by purchasing the patent.

But more fundamentally, Cisco's proposed defense will only serve to limit the rights of patentees with valid patents and meritorious claims because the good-faith belief in invalidity defense will *never* come into play against invalid patents or "bogus" claims. On the contrary, the *only* time the defense will have an effect is in circumstances where the infringement claim is meritorious—*i.e.*, where the patent has withstood all invalidity and unenforceability challenges and the patent owner has proved direct infringement by third parties, that the inducer intentionally caused those directly infringing acts, and that the inducer did so with knowledge of the patent and its relevance.

Abuses in the patent system, including those referenced by Cisco and its *amici* in publications by the FTC, PTO and others, are being dealt with by Congress and other government branches. Weak patents are properly the subject of PTO patent review procedures applying the principles announced by this Court. Abusive litigation can be dealt with through Federal Rule of Civil Procedure 11 and 35 U.S.C. § 285. *See Octane Fitness, LLC v. Icon Health & Fitness, Inc.*, 134 S. Ct. 1749 (2014); *Highmark Inc. v. Allcare Health Mgmt. System, Inc.*, 134 S. Ct. 1744 (2014). These are the means to remedy abuses or weaknesses in the patent system, not giving accused infringers a "pass" where they escape liability for infringing a valid patent because they mistakenly believed it was invalid.

Nor does Commil's standard present an "impossible dilemma" for recipients of notice letters, as Cisco alleges. Resp. Br. 48. In the absence of a good-faith belief of invalidity defense, the choices available to an alleged inducer who receives a notice letter are exactly the same as they are for every potential defendant who receives notice of a potentially meritorious legal claim: cease the accused activity, invoke any available legal process (such as seeking a declaratory judgment), wait for a lawsuit and then mount a defense (which, if meritorious, will eliminate all liability), or attempt to resolve the dispute through settlement. It would be inconsistent with other areas of law to insulate infringers from liability based on their belief that a patent is invalid.

In fact, recipients of allegations of inducing patent infringement have even more avenues available to them than other tort defendants because they can obtain relatively quick and inexpensive resolution of validity through patent review proceedings at the PTO. *Supra* p. 9. The public's interest in purging improvidently issued patents is far better served by a rule that encourages alleged inducers to actually invalidate patents they believe to be invalid (Commil's rule) than by a rule that encourages alleged inducers to wait to present that "belief" at trial (Cisco's rule). *See* Resp. Br. 49.

CONCLUSION

The Patent Act and 100 years of jurisprudence have established a careful balance of protecting invention through the issuance of patents without

stifling new innovation. The Federal Circuit's creation of a completely new defense which "fundamentally changes the operating landscape"[6] skews this balance, unwisely diluting § 271(b) of the Patent Act and creating a new patent law exception to the general rule that a good-faith belief in invalidity is not a defense. If this new defense is not overturned, and the historic balance restored, it will leave infringing customers who do not know the product is patented, much less infringing, holding the bag. The active infringer who induced their infringement and profited, however, will escape responsibility by simply stating that he "believed the presumptively valid patent was invalid." This cannot be the law.

The judgment of the court of appeals should be reversed with respect to inducement, and the case remanded to the Federal Circuit.

---

[6] Judge Reyna dissenting from the denial of Commil's petition for rehearing en banc. Pet. App. 60a.

Respectfully submitted,

SAYLES | WERBNER P.C.

Mark S. Werbner
Counsel of Record
Richard A. Sayles
Mark D. Strachan
Darren P Nicholson
4400 Renaissance Tower
1201 Elm Street
Dallas, TX 75270
(214) 939-8700
mwerbner@swtriallaw.com

HEIM, PAYNE & CHORUSH, LLP

Leslie V. Payne
Nathan J. Davis
Miranda Y. Jones
JP Morgan Chase Tower
600 Travis, Suite 6710
Houston, TX 77002
(713) 221-2000

March 20, 2015

SUPPLEMENTAL BRIEF

Nos. 13-896, 13-1044

Supreme Court, U.S.
FILED
OCT 21 2014
OFFICE OF THE CLERK

IN THE

Supreme Court of the United States

COMMIL USA, LLC,

Petitioner,

v.

CISCO SYSTEMS, INC.,

Respondent.

CISCO SYSTEMS, INC.,

Cross-Petitioner,

v.

COMMIL USA, LLC,

Cross-Respondent.

ON PETITION AND CONDITIONAL CROSS-PETITION FOR A WRIT OF CERTIORARI TO THE UNITED STATES COURT OF APPEALS FOR THE FEDERAL CIRCUIT

SUPPLEMENTAL BRIEF FOR RESPONDENT AND CONDITIONAL CROSS-PETITIONER CISCO SYSTEMS, INC.

HENRY B. GUTMAN
SIMPSON THACHER & BARTLETT LLP
425 Lexington Avenue
New York, NY 10017

JEFFREY E. OSTROW
HARRISON J. FRAHN IV
PATRICK E. KING
JONATHAN SANDERS
SIMPSON THACHER & BARTLETT LLP
2475 Hanover Street
Palo Alto, CA 94304

WILLIAM F. LEE
Counsel of Record
MARK C. FLEMING
FELICIA H. ELLSWORTH
ORAMEL H. SKINNER
ERIC F. FLETCHER
WILMER CUTLER PICKERING HALE AND DORR LLP
60 State Street
Boston, MA 02109
(617) 526-6000
william.lee@wilmerhale.com

WILLIAM G. MCELWAIN
WILMER CUTLER PICKERING HALE AND DORR LLP
1875 Pennsylvania Ave., NW
Washington, DC 20006

CORPORATE DISCLOSURE STATEMENT

Cisco Systems, Inc., has no parent corporation. To Cisco's knowledge, no publicly held company owns 10 percent or more of Cisco's stock.

TABLE OF CONTENTS

Page

CORPORATE DISCLOSURE STATEMENT i

TABLE OF AUTHORITIES iv

I. COMMIL'S FIRST QUESTION PRESENTED DOES NOT MERIT REVIEW, ESPECIALLY PRIOR TO FINAL JUDGMENT 2

A. The Court Should Reject The Government's Efforts To Re-litigate *Global-Tech* 2

B. A Good-Faith Belief That A Patent Is Invalid Or Not Infringed May Negate The Intent Required For Induced Infringement 6

C. Additional Factors Counsel Against Granting Commil's Petition 8

II. THE FEDERAL CIRCUIT'S CASE-SPECIFIC APPLICATION OF *GLOBAL-TECH* TO REVERSE THE DISTRICT COURT'S ERRONEOUS JURY INSTRUCTION IS CORRECT AND DOES NOT MERIT REVIEW 9

III. THE GOVERNMENT PROVIDES NO MEANINGFUL ARGUMENTS FOR DENYING THE CONDITIONAL CROSS-PETITION IF COMMIL'S PETITION IS GRANTED 10

CONCLUSION 13

TABLE OF AUTHORITIES

CASES

Page(s)

Anderson v. *Siemens Corp.*, 335 F.3d 466 (5th Cir. 2003) 11

Aro Manufacturing Co. v. *Convertible Top Replacement Co.*, 377 U.S. 476 (1964) 5, 6

Clouding IP, LLC v. *Rackspace Hosting, Inc.*, 2014 WL 495752 (D. Del. Feb. 6, 2014) 7

Ecolab, Inc. v. *FMC Corp.*, 569 F.3d 1335, *amended on reh'g in part*, 366 F. App'x 154 (Fed. Cir. 2009) 8

Gasoline Products Co. v. *Champlin Refining Co.*, 283 U.S. 494 (1931) 10, 11

Global-Tech Appliances, Inc. v. *SEB S.A.*, 131 S. Ct. 2060 (2011) ..... *passim*

Halo Electronics, Inc. v. *Pulse Electronics, Inc.*, 2013 WL 4458754 (D. Nev. Aug 16, 2013), *aff'd*, 2014 WL 5352367 (Fed. Cir. Oct. 22, 2014) 7

In re Bill of Lading Transmission & Processing System Patent Litigation, 681 F.3d 1323 (Fed. Cir. 2012) 3

Kolmes v. *World Elastic Corp.*, 1995 WL 918081 (M.D.N.C. Sept. 18, 1995) 7

Metro-Goldwyn-Mayer Studios, Inc. v. *Grokster, Ltd.*, 545 U.S. 913 (2005) 6

Microsoft Corp. v. *DataTern, Inc.*, 755 F.3d 899 (Fed. Cir. 2014) 3

TABLE OF AUTHORITIES—Continued

Page(s)

Ultratec, Inc. v. *Sorenson Communications, Inc.*, 2014 WL 4265847 (W.D. Wis. Aug. 28, 2014) 7

VNUS Medical Technologies, Inc. v. *Diomed Holdings, Inc.*, 2007 WL 2900532 (N.D. Cal. Oct. 2, 2007) 7

DOCKETED CASES

Global-Tech Appliances, Inc. v. *SEB S.A.*, No. 10-6 (U.S.) 4

Limelight Networks, Inc. v. *Akamai Technologies, Inc.*, No. 12-786 (U.S.) 4

STATUTES

35 U.S.C.

§ 271(b) 2, 3, 4, 6

§ 271(c) 5

OTHER AUTHORITIES

Matthews, Jr., Robert A., *Annotated Patent Digest* (2008) 5

IN THE

Supreme Court of the United States

Nos. 13-896, 13-1044

COMMIL USA, LLC,

Petitioner,

v.

CISCO SYSTEMS, INC.,

Respondent.

CISCO SYSTEMS, INC.,

Cross-Petitioner,

v.

COMMIL USA, LLC,

Cross-Respondent.

ON PETITION AND CONDITIONAL CROSS-PETITION FOR A WRIT OF CERTIORARI TO THE UNITED STATES COURT OF APPEALS FOR THE FEDERAL CIRCUIT

SUPPLEMENTAL BRIEF FOR RESPONDENT AND CONDITIONAL CROSS-PETITIONER CISCO SYSTEMS, INC.

The government's invitation brief, devoted almost entirely to rearguing the issue this Court squarely addressed and decided just three years ago in *Global-Tech Appliances, Inc.* v. *SEB S.A.*, 131 S. Ct. 2060

(2011), effectively contends that *Global-Tech* was wrongly decided. The suggestion that this Court should reconsider *Global-Tech*, or was somehow unclear or unthinking in *Global-Tech*'s unequivocal articulation of the required state of mind for induced infringement, is without merit and should be rejected. The government also acknowledges the serious vehicle problems presented by the interlocutory posture of this case and the possibility that the questions presented will be mooted by proceedings on remand. In short, the government presents no persuasive reason why this Court should review the first question presented in Commil's petition in No. 13-896 and correctly recommends that the Court deny Commil's second question presented.

Furthermore, the government recognizes the erroneous Seventh Amendment standard articulated by the Federal Circuit, reinforcing that, if any part of Commil's petition is granted, the question presented in Cisco's conditional cross-petition in No. 13-1044 should be considered as well.

I. COMMIL'S FIRST QUESTION PRESENTED DOES NOT MERIT REVIEW, ESPECIALLY PRIOR TO FINAL JUDGMENT

A. The Court Should Reject The Government's Efforts To Re-litigate *Global-Tech*

The reasoning and holding of *Global-Tech* could not be clearer. The first line of the Court's opinion lays out in plain terms the issue under review: "We consider whether a party who 'actively induces infringement of a patent' under 35 U.S.C. § 271(b) must know that the induced acts *constitute patent infringement*." 131 S. Ct. at 2063 (emphasis added). The Court was similarly clear in articulating its resolution of that issue: "[W]e

now hold that induced infringement under § 271(b) requires *knowledge that the induced acts constitute patent infringement.*" *Id.* at 2068 (emphasis added). And the Federal Circuit has never suggested that *Global-Tech* means anything other than what it explicitly says. *See* Commil Pet. App. 9a ("A finding of inducement requires both knowledge of the existence of the patent and 'knowledge that the induced acts constitute patent infringement.'" (quoting *Global-Tech*, 131 S. Ct. at 2068)); *Microsoft Corp.* v. *DataTern, Inc.*, 755 F.3d 899, 904 (Fed. Cir. 2014) ("To prove inducement of infringement, unlike direct infringement, the patentee must show that the accused inducer took an affirmative act to encourage infringement with the knowledge that the induced acts constitute patent infringement." (citing *Global-Tech*)); *In re Bill of Lading Transmission & Processing Sys. Patent Litig.*, 681 F.3d 1323, 1339 (Fed. Cir. 2012) (citing *Global-Tech* and observing that patentee must show that accused infringer "specifically intended their customers to infringe the ... patent and knew that the customer's acts constituted infringement").

Despite *Global-Tech*'s clear holding and uniform interpretation, the government contends that "*Global-Tech* does not clearly resolve ... whether the defendant must additionally possess actual knowledge that the induced conduct constitutes infringement." U.S. Br. 9. Remarkably, the government characterizes the sentence in *Global-Tech* beginning with the words "*we now hold,*" 131 S. Ct. at 2068 (emphasis added), as simply a "suggest[ion]." U.S. Br. 9-10. Besides being irreconcilable with the clear language of this Court's opinion, as uniformly understood and applied by the Federal Circuit since, the government's position is also contrary to the reading of *Global-Tech* that the government itself has previously presented to this Court. *See* U.S. Br.

13-14, *Limelight Networks, Inc.* v. *Akamai Techs., Inc.*, No. 12-786 (U.S. Mar. 3, 2014) ("Under ordinary principles of inducement liability, if a vendor induces its customers to practice all of the steps in the patented process, *and does so with knowledge that the induced acts constitute infringement*, the vendor would be liable for actively inducing infringement under Section 271(b)[.]" (emphasis added; citing *Global-Tech*)).

In any event, contrary to the government's assertions, the Court had the question of intent and specificity of knowledge squarely before it in *Global-Tech*.[1] Indeed, the Court considered the very "text, history, and purposes" (U.S. Br. 19) of Section 271(b) that the government suggests it overlooked. 131 S. Ct. at 2065 (beginning analysis "with the text of § 271(b)" and seeking dictionary guidance on textual meaning); *id.* at 2067 (noting Section 271(b) "was meant to codify" "pre-1952 case law"); *id.* at 2065-2067 (addressing "case law that predates the enactment of § 271 as part [of] the Patent Act of 1952"). With the issue fully briefed and considered, the Court held "that induced infringement under § 271(b) requires knowledge that the induced acts constitute patent infringement." *Id.* at 2068.

---

[1] Several amici in *Global-Tech* expressly urged the Court to adopt the specific intent standard the Court ultimately announced. *See* Comcast Corp. et al. Br. 4, *Global-Tech* (U.S. Dec. 6, 2010) ("In keeping with its common-law origins, inducement liability under 35 U.S.C. § 271(b) should be imposed only upon a showing that the defendant had actual knowledge that the acts it was encouraging infringed a patent."); Yahoo! Inc. et al. Br. 8-9, *Global-Tech* (U.S. Dec. 6, 2010) ("The particular structure of Section 271 confirms that inducement in patent law also requires a specific intent to encourage legal violations, *knowing of the illegality*." (emphasis added)).

Nothing about *Aro Manufacturing Co.* v. *Convertible Top Replacement Co.*, 377 U.S. 476 (1964) (*Aro II*), undermines the import of this pronouncement. In *Aro II*, the Court considered whether the knowledge requirement of Section 271(c), governing contributory infringement, "require[s] a further showing that Aro knew that the tops were patented, and knew also that Ford was not licensed under the patent so that any fabric replacement by a Ford car owner constituted infringement." *Id.* at 488. The Court answered that question in the affirmative: "On this question a majority of the Court is of the view that § 271(c) does require a showing that the alleged contributory infringer knew that the combination for which his component was especially designed *was both patented and infringing*." *Id.* (emphasis added); *see id.* at n.8 (plurality opinion) (noting that a majority of the Court shared this view); *see also* 2 Matthews, *Annotated Patent Digest* § 10:44 (2008) (emphasizing that *Aro II* held that both knowledge of the patent and knowledge of infringement are required).

Though it appears reluctant to state it so explicitly, the government's argument is, in effect, that *Global-Tech* was wrongly decided. In addition to not being presented by Commil's petition, this argument is without merit. Accepting the government's position would not only require the Court to overrule *Global-Tech*, but would also have a chilling effect on innovation by dramatically expanding infringement liability to parties who do not even practice the patent themselves, simply because they are generally aware of the patent's existence—even where they have reason to believe in good faith that the patent is invalid and/or not infringed. Such a conception of inducement liability extends far beyond the language of the statute, was correctly re-

jected in *Global-Tech*, and should not be entertained now. *See* U.S. Br. 18 ("Construing Section 271(b) to require knowledge of actual infringement would reflect a more straightforward reading of the statutory text.").

B. A Good-Faith Belief That A Patent Is Invalid Or Not Infringed May Negate The Intent Required For Induced Infringement

To the extent it addresses Commil's first question presented other than through its attempt to reargue *Global-Tech*, the government advances no more persuasive arguments than Commil. Like Commil, the government fails to appreciate the crucial distinction between *direct* infringement and *induced* infringement: the alleged infringer's state of mind. *Global-Tech*, 131 S. Ct. at 2068. This difference distinguishes the direct infringement authorities cited by the government (at 12-13), which mimic those cited by Commil and are unpersuasive for the same reasons. *See* Cisco Opp. 8-10.[2] This Court has made clear that induced infringement, unlike direct infringement, requires culpable action. *See Metro-Goldwyn-Mayer Studios Inc.* v. *Grokster, Ltd.*, 545 U.S. 913, 937 (2005) (emphasizing that liability standard for inducement of copyright infringement is limited, targeting only "purposeful, culpable expression and conduct," and explicitly tying its reasoning to similar decisions in context of induced patent infringement under § 271(b)); *cf. Aro II*, 377 U.S. at 488.

---

[2] The government's attempt (at 13) to refute the axiom that one cannot infringe an invalid patent by reciting a single sentence of dicta from Judge Rich, made in passing while addressing an unconnected jury verdict issue, is no more persuasive and does not inform the analysis here.

The policy arguments advanced by the government (at 14-16), like Commil's, also miss the mark. Contrary to the government's and Commil's predictions, the lower courts have applied the good-faith belief of invalidity defense with no ill effect on patent rights. *E.g.*, *Ultratec, Inc.* v. *Sorenson Commc'ns, Inc.*, 2014 WL 4265847, at *41 (W.D. Wis. Aug. 28, 2014) (denying summary judgment of no induced infringement despite grant of inter partes review because it is for "the jury to assess whether defendants' invalidity defenses were held in good faith and whether they negate the specific intent to induce infringement"); *Clouding IP, LLC* v. *Rackspace Hosting, Inc.*, 2014 WL 495752, at *3 (D. Del. Feb. 6, 2014) (concluding that good-faith belief of invalidity is not "a pleading requirement" and that evidence of good-faith belief of invalidity is only relevant "on the merits at trial"); *Halo Elecs., Inc.* v. *Pulse Elecs., Inc.*, 2013 WL 4458754, at *6 (D. Nev. Aug. 16, 2013) (refusing to set aside verdict of induced infringement notwithstanding asserted defense of good-faith belief of invalidity because, while relevant, "evidence of a good-faith invalidity belief does not preclude a finding of induced infringement"), *aff'd*, 2014 WL 5352367 (Fed. Cir. Oct. 22, 2014). Indeed, several district courts had recognized that a good-faith belief of invalidity was a valid defense even before the Federal Circuit's decision in this case. *See, e.g.*, *VNUS Med. Techs., Inc.* v. *Diomed Holdings, Inc.*, 2007 WL 2900532, at *1 (N.D. Cal. Oct. 2, 2007); *Kolmes* v. *World Elastic Corp.*, 1995 WL 918081, at *10 (M.D.N.C. Sept. 18, 1995).

In fact, all of the government's policy arguments would equally undermine the defense of a good-faith belief in non-infringement, which neither Commil nor any judge on the Federal Circuit has questioned. *See* Cisco Opp. 10-11. Indeed, the Federal Circuit has up-

held findings of no induced infringement, "even though [the defendant's] product was ultimately found to infringe," where the jury had substantial evidence from which to conclude that the defendant lacked the intent required for induced infringement because the defendant "reasonably believed that the use of [its product] would not infringe." *Ecolab, Inc.* v. *FMC Corp.*, 569 F.3d 1335, 1351, *amended on reh'g in part*, 366 F. App'x 154 (Fed. Cir. 2009). The government's only response to this point is to posit (at 20) that this Court might reconsider *that* doctrine in another case as well. That would be a remarkable change in law. A good-faith belief that the asserted patent is not infringed is an established and widely accepted defense to induced infringement, and has existed for many years without detrimental effect on patent rights.

C. Additional Factors Counsel Against Granting Commil's Petition

The government correctly recognizes the factors that make this case unsuitable as a vehicle for the Court to review Commil's questions presented and that also commend further percolation in the district courts and Federal Circuit before any review by this Court.

First, as the government acknowledges (at 11 n.2), the Federal Circuit has done nothing more than announce the availability of the good-faith belief of invalidity as a defense. As the Federal Circuit noted (Commil Pet. App. 12a-13a & n.1), it did not rule that belief of the patent's invalidity *precludes* a finding of induced infringement; rather, it simply recognized that a reasonable belief in the invalidity of the patent-in-suit is *relevant* in determining whether the accused infringer had the required specific intent to induce infringement. Until the lower courts have an opportunity to

apply the Federal Circuit's decision, any review by this Court would be premature.

In addition, the government acknowledges (at 15-16) that because Commil's second question presented does not merit this Court's review (*infra* Part II), there will be a third trial whether or not the Court takes up Commil's first question. After that trial, the district court—and perhaps the Federal Circuit—will have to review actual liability for induced infringement. *See* Commil Pet. App. 32a (O'Malley, J.) ("If we send this matter back for a new trial on induced infringement without resolving these issues, we likely will see the case return in much the same posture."). Cisco will have "additional available arguments" on remand (U.S. Br. 16 n.4), including substantial non-infringement arguments that were not passed upon by the Federal Circuit. Commil Pet. App. 31a-32a (O'Malley, J.). As a result, there may be no need for a jury to hear evidence of Cisco's good-faith belief of invalidity because the case can be decided on non-infringement grounds before verdict. *See id.* 31a; Cisco C.A. Br. 31-35. In that instance, this Court's review would have no impact on the parties' dispute. And if there is a third trial in which a jury considers Cisco's good-faith belief of invalidity, then the question will arise again in this very case and will be better suited for review on a full record after final judgment, rather than in this interlocutory posture.

II. THE FEDERAL CIRCUIT'S CASE-SPECIFIC APPLICATION OF *GLOBAL-TECH* TO REVERSE THE DISTRICT COURT'S ERRONEOUS JURY INSTRUCTION IS CORRECT AND DOES NOT MERIT REVIEW

The Federal Circuit's unanimous conclusion that the jury instruction concerning the required culpability for a finding of induced infringement was erroneous

and required a new trial is a correct application of this Court's holding in *Global-Tech*. Even were it not, Commil's second question presented would not merit this Court's attention. As the government recognizes, once *Global-Tech* is accepted as governing the level of intent needed to induce patent infringement—which it plainly does (*supra* Part I.A)—Commil's remaining argument consists only of "a case-specific challenge to the court of appeals' interpretation of the particular instructions given in this case." U.S. Br. 18.

While the government is correct that Commil's second question presented is unworthy of this Court's review, it is incorrect to suggest (at 20) that the question might warrant review in another case. The Court already reviewed and resolved Commil's second question in *Global-Tech* and held that specific intent, including actual knowledge of infringement, is needed. *Supra* Part I.A.

III. The Government Provides No Meaningful Arguments For Denying The Conditional Cross-Petition If Commil's Petition Is Granted

The government acknowledges (at 22-23) that the Federal Circuit's discussion of Cisco's Seventh Amendment argument incorrectly invoked the mandamus standard rather than the standard articulated by this Court in *Gasoline Prods. Co.* v. *Champlin Ref. Co.*, 283 U.S. 494, 500 (1931), but attempts to avoid the obvious implications of this error by suggesting that the rote articulation of the correct standard earlier in the decision was sufficient. But the Federal Circuit's *holding* on Cisco's Seventh Amendment challenge clearly depended on applying the mandamus standard (Commil Pet. App. 20a), which the government recognizes would

"permit a partial retrial more readily than the *Gasoline Products* standard." U.S. Br. 23.

The government fails to explain how, under the correct Seventh Amendment standard, the issues of invalidity and induced infringement are "distinct and separable" from each other as required by *Gasoline Products*. *See* Cross-Pet. 16-19; Commil Pet. App. 37a (O'Malley, J.) (noting the "potential for confusion because of the interwoven nature of the invalidity claims and Cisco's good faith defense to induced infringement"); *id.* 63a (Newman, J., joined by Rader, C.J., Reyna & Wallach, JJ., dissenting from denial of rehearing) (concluding that "the issues of infringement and validity are interwoven"). Instead, the government asserts (at 22) that this error did not affect the outcome because the third jury may assess Cisco's good-faith belief of invalidity defense without "re-deciding" or "revisiting" the first jury's invalidity verdict. But a partial retrial violates the Seventh Amendment not only if it requires a revisiting of the first jury's verdict, but also if it invites jury confusion—as the panel majority's partial remand clearly does. *See Anderson* v. *Siemens Corp.*, 335 F.3d 466, 476 (5th Cir. 2003) (partial retrial prohibited when the issue "subject to retrial [is] so interwoven with other issues in the case that [it] cannot be submitted to the jury ... without confusion and uncertainty" (internal quotation marks omitted)).

Finally, the government asserts (at 23) that Cisco's Seventh Amendment rights should be disregarded because of the grounds on which a new trial was ordered. That is simply absurd. Neither this nor any other court has ever suggested that the Constitution somehow ceases to apply depending on the reason for granting a new trial. *See* Cisco Reply Br. 7-8. Once a new trial is ordered, the Constitution requires a full retrial *unless*

the issues are clearly distinct and separable; otherwise the jury right prevails. In any event, the Federal Circuit recognized that "Cisco was not alone in its attempt to curry favor with the jury through the use of religious references." Commil Pet. App. 15a n.2 (Prost, J.); *id.* 30a n.1 (O'Malley, J.) ("[C]ounsel for both parties made improper comments during the trial.").

As with the questions presented in Commil's petition, Cisco's Seventh Amendment argument can be taken up by this Court (if necessary) after a final judgment, which is why the Court should deny both petitions. The interrelatedness of the two petitions, however, reinforces the fact that if the Court grants any part of Commil's petition, it should also grant Cisco's cross-petition.

CONCLUSION

The Court should deny Commil's petition for a writ of certiorari in No. 13-896. If that petition is granted, the Court should also grant Cisco's conditional cross-petition in No. 13-1044.

Respectfully submitted.

HENRY B. GUTMAN
SIMPSON THACHER & BARTLETT LLP
425 Lexington Avenue
New York, NY 10017

JEFFREY E. OSTROW
HARRISON J. FRAHN IV
PATRICK E. KING
JONATHAN SANDERS
SIMPSON THACHER & BARTLETT LLP
2475 Hanover Street
Palo Alto, CA 94304

WILLIAM F. LEE
Counsel of Record
MARK C. FLEMING
FELICIA H. ELLSWORTH
ORAMEL H. SKINNER
ERIC F. FLETCHER
WILMER CUTLER PICKERING HALE AND DORR LLP
60 State Street
Boston, MA 02109
(617) 526-6000
william.lee@wilmerhale.com

WILLIAM G. MCELWAIN
WILMER CUTLER PICKERING HALE AND DORR LLP
1875 Pennsylvania Ave., NW
Washington, DC 20006

OCTOBER 2014

AMICUS CURIAE BRIEF

Supreme Court, U.S.
FILED
JAN 27 2015
OFFICE OF THE CLERK

No. 13-896

In the Supreme Court of the United States

COMMIL USA, LLC, PETITIONER

v.

CISCO SYSTEMS, INC.

ON WRIT OF CERTIORARI
TO THE UNITED STATES COURT OF APPEALS
FOR THE FEDERAL CIRCUIT

BRIEF FOR THE UNITED STATES AS AMICUS CURIAE SUPPORTING PETITIONER

DONALD B. VERRILLI, JR.
Solicitor General
Counsel of Record
JOYCE R. BRANDA
Acting Assistant Attorney General
MALCOLM L. STEWART
Deputy Solicitor General
GINGER D. ANDERS
Assistant to the Solicitor General
MARK R. FREEMAN
THOMAS PULHAM
Attorneys
Department of Justice
Washington, D.C. 20530-0001
SupremeCtBriefs@usdoj.gov
(202) 514-2217

SARAH T. HARRIS
General Counsel
NATHAN K. KELLEY
Solicitor
THOMAS W. KRAUSE
Deputy Solicitor
FRANCES M. LYNCH
BRIAN T. RACILLA
Associate Solicitors
United States Patent and Trademark Office
Alexandria, Va. 22313

QUESTION PRESENTED

Under 35 U.S.C. 271(b), "[w]hoever actively induces infringement of a patent shall be liable as an infringer." The question presented is as follows:

Whether a good-faith belief that a patent is invalid is a defense to inducement liability under Section 271(b).

TABLE OF CONTENTS

Page

Interest of the United States 1
Statement 1
Summary of argument 6
Argument 8
I. Section 271(b) does not require knowledge of the infringing nature of the induced acts, and a good-faith belief in non-infringement is not a defense to inducement liability 9
A. This Court's decision in *Global-Tech* does not clearly resolve whether Section 271(b) requires knowledge of the infringing nature of the induced acts 10
B. *Aro II* indicates that Section 271(c) does not require knowledge that the induced acts constitute infringement, and under *Global-Tech*, the same construction applies to Section 271(b) 13
C. Considerations of patent policy support construing Section 271(b) to require only knowledge of the patent and the charge of infringement 17
II. Even if a good-faith belief in non-infringement is treated as a defense to liability under Section 271(b), it does not follow that a good-faith belief that a patent is invalid is also a defense 18
A. The text and structure of the Patent Act establish that a good-faith belief in invalidity does not negate the scienter required by Section 271(b) 19
1. Section 271(b) requires scienter with respect to "infringement," and a belief that the patent is invalid does not negate a defendant's knowledge of "infringement" 19

Table of Contents—Continued: Page

2. The Federal Circuit's contrary conclusion was based on the erroneous view that an invalid patent cannot be infringed.....22
3. Respondent's arguments in support of the Federal Circuit's decision are unpersuasive 26
B. Treating a good-faith belief in invalidity as a defense to inducement liability would substantially undermine Section 271(b)'s efficacy in enforcing patent rights 28
Conclusion.....33
Appendix — Statutory provisions 1a

TABLE OF AUTHORITIES

Cases:

A.B. Chance Co. v. *RTE Corp.*, 854 F.2d 1307 (Fed. Cir. 1988) 25
Armstrong v. *Motorola, Inc.*, 374 F.2d 764 (7th Cir.), cert. denied, 389 U.S. 830 (1967).....16
Aro Mfg. Co. v. *Convertible Top Replacement Co.*, 377 U.S. 476 (1964) .....*passim*
Bill of Lading Transmission & Processing Sys. Patent Litig., In re, 681 F.3d 1323 (Fed. Cir. 2012).....13
Cardinal Chem. Co. v. *Morton Int'l, Inc.*, 508 U.S. 83 (1993) 8, 23, 24, 25, 29, 30
CEATS, Inc. v. *Continental Airlines, Inc.*, 755 F.3d 1356 (Fed. Cir. 2014), petition for cert. pending, No. 14-681 (filed Dec. 4, 2014).....24
Deposit Guar. Nat'l Bank v. *Roper*, 445 U.S. 326 (1980) 23
DSU Med. Corp. v. *JMS Co.*, 471 F.3d 1293 (Fed. Cir. 2006).....13

Cases—Continued: Page

Fromson v. *Advance Offset Plate, Inc.*, 755 F.2d 1549 (Fed. Cir. 1985) 24
Gasoline Prods. Co. v. *Champlin Ref. Co.*, 283 U.S. 494 (1931) 5
Global-Tech Appliances, Inc. v. *SEB S.A.*, 131 S. Ct. 2060 (2011) ..... *passim*
Graham v. *John Deere Co.*, 383 U.S. 1 (1966) 30
International Med. Prosthetics Research Assocs., Inc. v. *Gore Enter. Holdings, Inc.*, 787 F.2d 572 (Fed. Cir. 1986) 25
Limelight Networks, Inc. v. *Akamai Techs., Inc.*, 134 S. Ct. 2111 (2014) 17, 19
Markman v. *Westview Instruments, Inc.*, 517 U.S. 370 (1996) 18
MedImmune, Inc. v. *Genentech, Inc.*, 549 U.S. 118 (2007) 17, 29
Medtronic, Inc. v. *Cardiac Pacemakers, Inc.*, 721 F.2d 1563 (Fed. Cir. 1983) 20, 25
Metro-Goldwyn-Mayer Studios Inc. v. *Grokster, Ltd.*, 545 U.S. 913 (2005) 27, 33
Microsoft Corp. v. *i4i Ltd. P'ship*, 131 S. Ct. 2238 (2011) 20
Nautilus, Inc. v. *Biosig Instruments, Inc.*, 134 S. Ct. 2120 (2014) 30
Pandrol USA, LP v. *Airboss Ry. Prods., Inc.*, 320 F.3d 1354 (Fed. Cir. 2003) 24, 25
Prima Tek II, L.L.C. v. *Polypap, S.A.R.L.*, 412 F.3d 1284 (Fed. Cir. 2005) 27
Richdel, Inc. v. *Sunspool Corp.*, 714 F.2d 1573 (Fed. Cir. 1983) 27
Robert Bosch LLC v. *Pylon Mfg. Corp.*, 659 F.3d 1142 (Fed. Cir. 2011) 24

Cases—Continued: Page

Seagate Tech., LLC, In re, 497 F.3d 1360 (Fed. Cir. 2007), cert. denied, 552 U.S. 1230 (2008) 28
Slimfold Mfg. Co. v. *Kinkead Indus.*, 932 F.2d 1453 (Fed. Cir. 1991) 29
SmithKline Beecham Corp. v. *Apotex Corp.*, 403 F.3d 1331 (Fed. Cir. 2005), cert. denied, 547 U.S. 1218 (2006) 24
Spectra-Physics, Inc. v. *Coherent, Inc.*, 827 F.2d 1524 (Fed. Cir.), cert. denied, 484 U.S. 954 (1987) 25
Tenneco Resins, Inc. v. *Reeves Bros.*, 752 F.2d 630 (Fed. Cir. 1985) 25
Unique Concepts, Inc. v. *Brown*, 939 F.2d 1558 (Fed. Cir. 1991) 24
Virnetx, Inc. v. *Cisco Sys., Inc.*, 767 F.3d 1308 (Fed. Cir. 2014) 18

Constitution and statutes:

U.S. Const. Amend. VII 4, 5
Patent Act, 35 U.S.C. 1 *et seq.*:
35 U.S.C. 2(a)(1) 1
35 U.S.C. 2(b)(8) 1
35 U.S.C. 112 30
35 U.S.C. 271(a) ..... *passim*, 1a
35 U.S.C. 271(b) ..... *passim*, 1a
35 U.S.C. 271(c) ..... *passim*, 1a
35 U.S.C. 271(e)(5) 23, 5a
35 U.S.C. 281 1
35 U.S.C. 282 ..... 32, 8a
35 U.S.C. 282(b)(1) 22, 9a
35 U.S.C. 282(b)(2) 22, 9a
35 U.S.C. 284 ..... 1, 16, 28

Statutes—Continued: Page

35 U.S.C. 287(a) 17
35 U.S.C. 298 16
35 U.S.C. 311 29
35 U.S.C. 321 29
19 U.S.C. 1337(a)(1)(B)(i) 22
21 U.S.C. 355(j)(2)(A)(vii)(IV) 23

Miscellaneous:

Donald S. Chisum, *Chisum on Patents* (2014):
Vol. 5 ..... 13, 16, 20
Vol. 6A 20, 32
Brian D. Coggio, *Avoid Inducement Liability With Early Opinion Of Counsel* (Mar. 21, 2014), http://www.law360.com/articles/516267/avoid-inducement-liability-with-early-opinion-of-counsel 31
P.J. Federico, *Commentary on the New Patent Act*, 75 J. Pat. & Trademark Off. Soc'y 161 (1993) 23
H.R. 5988, 80th Cong., 2d Sess. (1948) 33
H.R. 3866, 81st Cong., 1st Sess. (1949) 33
H.R. Rep. No. 98, 112th Cong., 1st Sess. (2011) 16
H.R. Rep. No. 1923, 82d Cong., 2d Sess. (1952) 10
R. Carl Moy, *Moy's Walker on Patents* (4th ed. 2012):
Vol. 5 15
Vol. 6 22
S. Rep. No. 1979, 82d Cong., 2d Sess. (1952) 10
Nathan A. Sloan, *Think it is Invalid? A New Defense to Negate Intent for Induced Infringement*, 23 Fed. Cir. B.J. 613 (2014) 31

In the Supreme Court of the United States

No. 13-896

COMMIL USA, LLC, PETITIONER

v.

CISCO SYSTEMS, INC.

ON WRIT OF CERTIORARI
TO THE UNITED STATES COURT OF APPEALS
FOR THE FEDERAL CIRCUIT

BRIEF FOR THE UNITED STATES AS AMICUS CURIAE SUPPORTING PETITIONER

INTEREST OF THE UNITED STATES

This case presents the question whether a good-faith belief that a patent is invalid is a defense to liability under 35 U.S.C. 271(b) for inducing infringement of the patent. The United States Patent and Trademark Office (PTO), which is responsible for "the granting and issuing of patents," 35 U.S.C. 2(a)(1), as well as for advising the President on issues of patent policy, 35 U.S.C. 2(b)(8), has a substantial interest in the resolution of that question. At the Court's invitation, the United States filed a brief as amicus curiae at the petition stage of this case.

STATEMENT

1. A patent holder may bring a civil action for infringement in order to enforce the exclusive rights granted by the Patent Act. 35 U.S.C. 271(a), 281, 284.

Section 271(a) of Title 35 of the United States Code provides in relevant part that "whoever without authority makes, uses, offers to sell, or sells any patented invention, within the United States * * * infringes the patent." 35 U.S.C. 271(a). Under Section 271(a), a "direct infringer's knowledge or intent is irrelevant" to liability. *Global-Tech Appliances, Inc.* v. *SEB S.A.*, 131 S. Ct. 2060, 2065 n.2 (2011).

Section 271(b) states that "[w]hoever actively induces infringement of a patent shall be liable as an infringer." 35 U.S.C. 271(b). This Court has held that Section 271(b) requires "at least some intent," including knowledge of, or willful blindness concerning, the patentee's exclusive rights. *Global-Tech*, 131 S. Ct. at 2065, 2068.

2. a. Petitioner holds U.S. Patent No. 6,430,395 (filed Feb. 16, 2001) (the '395 patent), which claims a method of implementing wireless networks. Respondent manufactures and sells wireless networking equipment. Petitioner brought this action in federal district court, alleging that respondent had manufactured network access points and controllers that employed the claimed method. Pet. App. 2a-5a. Petitioner alleged that respondent directly infringes the '395 patent when it uses its access points and controllers, and that respondent indirectly infringes when it encourages its customers to do the same. Pet. 7.

b. A jury rejected respondent's contention that the '395 patent is invalid, and it found respondent liable for direct infringement but not for inducing infringement. Pet. App. 40a-41a. The jury awarded damages of approximately $3.7 million. *Id.* at 41a.

Petitioner moved for a new trial on inducement liability and damages on the ground that respondent's

local counsel had made inappropriate religious references intended to prejudice the jury against petitioner. Pet. App. 41a-43a. The district court held that the comments had "prejudiced the jury's findings regarding indirect infringement and damages," and it granted a retrial on those issues, while leaving intact the jury's verdict that the '395 patent was not invalid. *Id.* at 44a; see 13-1044 Pet. App. 3a-12a.

c. In a subsequent partial retrial, respondent sought to introduce evidence that it had a good-faith belief that the '395 patent was invalid. Respondent contended that such evidence supported its argument that it lacked intent to induce infringement. The district court excluded the evidence without explanation. Pet. App. 46a.

The district court instructed the jury that it could find respondent liable for induced infringement only if it concluded that respondent (1) "actually intended to cause the acts that constitute direct infringement," and (2) was aware of the patent and "knew or should have known that its actions would induce actual infringement." Pet. App. 238a-239a. The jury found respondent liable for inducing infringement and awarded damages of approximately $63.8 million. *Id.* at 48a.

3. A divided panel of the Federal Circuit affirmed in part, vacated in part, and remanded for a new trial on induced infringement and damages. Pet. App. 1a-39a.

a. The court of appeals unanimously held that the district court's jury instructions were erroneous and warranted retrial. The court stated that, under *Global-Tech*, "[a] finding of inducement requires both knowledge of the existence of the patent and 'know-

ledge that the induced acts constitute patent infringement.'" Pet. App. 9a (quoting 131 S. Ct. at 2068). The court of appeals concluded that the district court's jury instructions, by stating that respondent could be found liable if it "knew or should have known that its actions would induce actual infringement," had allowed "the jury to find [respondent] liable based on mere negligence where knowledge is required." *Id.* at 7a-8a, 239a. The court held that the instruction was prejudicial and required a retrial. *Id.* at 9a-10a.

A majority of the panel next held that the district court had erred by excluding respondent's evidence that it possessed a good-faith belief that the '395 patent was invalid. Pet. App. 10a-13a; see *id.* at 28a-29a (O'Malley, J., concurring in part and dissenting in part). The court stated that "evidence of an accused inducer's good-faith belief of invalidity may negate the requisite intent for induced infringement," *id.* at 12a-13a, because "[i]t is axiomatic that one cannot infringe an invalid patent," *id.* at 11a. The court also relied on the Federal Circuit's prior holding that evidence of "a good-faith belief of non-infringement" is a defense to inducement liability. *Ibid.* The court found "no principled distinction between a good-faith belief of invalidity and a good-faith belief of non-infringement for the purpose of whether a defendant possessed the specific intent to induce infringement of a patent." *Ibid.* The majority also stated, however, that a belief in invalidity would not necessarily "preclude[] a finding of induced infringement." *Id.* at 13a & n.1.

A different majority held that the district court's grant of a retrial limited to inducement liability and damages did not violate the Seventh Amendment. Pet. App. 17a-20a; see *id.* at 22a (Newman, J., concur-

ring in part and dissenting in part). The court explained that, under *Gasoline Products Co.* v. *Champlin Refining Co.*, 283 U.S. 494 (1931), partial retrials are permitted if, but only if, "it clearly appears that the issue to be retried is so distinct and separable from the others that a trial of it alone may be had without injustice." Pet. App. 17a (quoting 283 U.S. at 500). The court concluded that the issues to be retried in this case were "distinct and separate" from the already-decided issue of the patent's validity. *Id.* at 20a.

Finally, the court of appeals affirmed the district court's construction of the patent claims and its findings regarding validity. Pet. App. 20a-21a. The court declined to address respondent's contention that petitioner had failed to prove that respondent's customers committed the direct infringement necessary to support respondent's liability for inducement, as well as respondent's arguments concerning damages. *Id.* at 21a.

b. Judge Newman dissented from the court's holding that a good-faith belief in invalidity is a defense to inducement liability. Pet. App. 22a-27a. Judge O'Malley dissented from the court's holding that the partial retrial was consistent with the Seventh Amendment, as well as from the court's decision not to reach the question whether respondent's customers had committed direct infringement. *Id.* at 28a-39a.

4. The court of appeals denied both parties' petitions for rehearing en banc. Pet. App. 50a-52a. Five judges would have granted rehearing en banc to consider the panel's recognition of the "good faith belief in invalidity" defense, and four of those judges also would have granted rehearing to consider the panel's

grant of a partial retrial. *Id.* at 53a-60a (Reyna, J., dissenting from the denial of rehearing en banc); *id.* at 61a-63a (Newman, J., dissenting from the denial of rehearing en banc).

SUMMARY OF ARGUMENT

This case presents the question whether a good-faith belief that a patent is invalid is a defense to liability under 35 U.S.C. 271(b) for inducing infringement of that patent. In answering that question in the affirmative, the Federal Circuit did not examine the Patent Act's text and structure. Instead, the court (a) took it as given that a good-faith belief in non-infringement is a defense to inducement liability, and (b) found no basis for distinguishing such a belief from a good-faith belief in the patent's invalidity. Pet. App. 11a. Both the Federal Circuit's premise and its conclusion are incorrect.

I. The court of appeals erred in assuming that knowledge of the infringing nature of the induced acts is necessary for an inducer to be held liable under Section 271(b), such that an accused infringer's good-faith belief in non-infringement negates that required knowledge. Although that issue is not squarely before this Court, this brief addresses the question because it was the premise on which the court of appeals concluded that a good-faith belief in invalidity is also a defense.

This Court's decisions indicate that a patentee may establish the scienter required by Section 271(b) by proving that the inducer was aware of the patent and of the patentee's view that the induced conduct was infringing. Under that standard, an inducer may be held liable even if it believed in good faith that the induced conduct did not infringe the patent. In

Global-Tech Appliances, Inc. v. *SEB S.A.*, 131 S. Ct. 2060 (2011), the Court held that inducement liability under Section 271(b) requires at least knowledge of, or willful blindness to, the patent's existence. The Court did not clearly resolve whether the alleged inducer must also know about the infringing nature of the induced acts. The *Global-Tech* Court did hold, however, that Section 271(b)'s scienter requirement is governed as a matter of statutory *stare decisis* by *Aro Manufacturing Co.* v. *Convertible Top Replacement Co.*, 377 U.S. 476, 484 (1964) (*Aro II*).

The Court in *Aro II* held that the knowledge required by Section 271(c), which defines contributory infringement, was established by the defendant's receipt of a letter from the patentee informing it of the relevant patent and of the *patentee*'s view that the defendant's conduct was infringing. Under *Global-Tech*, Section 271(b) should be similarly construed. That construction strikes an appropriate balance between protecting patent rights and ensuring that accused inducers are not held liable for innocent conduct.

II. Even if a good-faith belief in non-infringement were a defense to inducement liability, Section 271(b) would not require knowledge of the patent's validity or suggest that the inducer's good-faith belief in invalidity is a proper defense. Section 271(b) requires that the alleged inducer have acted intentionally to bring about "infringement." 35 U.S.C. 271(b). "Infringement" occurs whenever the patent's elements are practiced without authorization, regardless of the patent's validity. Thus, even if Section 271(b) required proof that the defendant knew the induced conduct would constitute actual "infringement," the

defendant's good-faith belief in the invalidity of the patent would not negate the existence of such knowledge.

In reaching a contrary conclusion, the Federal Circuit found it "axiomatic that one cannot infringe an invalid patent." Pet. App. 11a. In fact, the Patent Act's text and structure, as well as decisions of this Court and the Federal Circuit, establish that infringement and invalidity are separate issues. Under those decisions, a finding of invalidity precludes *liability* for infringement, but it does not negate the *fact* that infringement has occurred.

Recognizing a belief-in-invalidity defense would undermine Section 271(b)'s important function of enabling patentees to enforce their rights in situations where the patent cannot practicably be enforced against direct infringers. "[I]t is often more difficult to determine whether a patent is valid than whether it has been infringed." *Cardinal Chem. Co.* v. *Morton Int'l, Inc.*, 508 U.S. 83, 99 (1993). If a good-faith belief in the patent's invalidity is a defense to inducement liability, defendants can easily assert that they possessed such a belief, and such assertions will be difficult to refute.

ARGUMENT

The Federal Circuit took it as given that a good-faith belief in non-infringement is a defense to inducement liability under Section 271(b). From that premise, the court concluded that a good-faith belief in invalidity must also be a defense. Both steps in the court's reasoning are erroneous.

Contrary to the court of appeals' assumption, Section 271(b) does not require knowledge that the induced acts constituted infringement. But even if it

did, there would be no sound reason to conclude that knowledge of the patent's validity is similarly required. The Patent Act's text, structure, and purposes establish that infringement and validity are independent questions. A defendant who believes that a patent is invalid may nonetheless possess knowledge that he is inducing infringement.

I. SECTION 271(b) DOES NOT REQUIRE KNOWLEDGE OF THE INFRINGING NATURE OF THE INDUCED ACTS, AND A GOOD-FAITH BELIEF IN NON-INFRINGEMENT IS NOT A DEFENSE TO INDUCEMENT LIABILITY

This Court held in *Global-Tech Appliances, Inc.* v. *SEB S.A.*, 131 S. Ct. 2060 (2011), that Section 271(b) requires knowledge of the patent in suit. The Court did not definitively resolve whether Section 271(b) additionally requires knowledge of the infringing nature of the induced acts. The Court's reliance on *Aro Manufacturing Co.* v. *Convertible Top Replacement Co.*, 377 U.S. 476 (1964), suggests, however, that a patentee may establish the scienter required by Section 271(b) by proving that the inducer knew about the patent and was aware of the patentee's view that the induced conduct is infringing. Under that approach, which strikes the appropriate balance between the rights of patent holders and the protection of truly innocent inducers, a defendant's good-faith belief that the induced conduct was not infringing is not a defense to Section 271(b) liability.[1]

---

[1] Because this Court granted certiorari only on the question whether "a defendant's belief that a patent is invalid is a defense to induced infringement," Pet. i, the soundness of the court of appeals' initial premise—that Section 271(b) requires knowledge of

A. This Court's Decision In *Global-Tech* Does Not Clearly Resolve Whether Section 271(b) Requires Knowledge Of The Infringing Nature Of The Induced Acts

1. Section 271(a) defines the acts that constitute direct infringement by providing that "whoever without authority makes, uses, offers to sell, or sells any patented invention * * * infringes the patent." 35 U.S.C. 271(a). Section 271(a) is a "declaration of what constitutes infringement in the present statute." S. Rep. No. 1979, 82d Cong., 2d Sess. 8 (1952); H.R. Rep. No. 1923, 82d Cong., 2d Sess. 9 (1952). Because "unauthorized use, without more, constitutes infringement," *Aro II*, 377 U.S. at 484, a "direct infringer's knowledge or intent is irrelevant" to his liability under Section 271(a). *Global-Tech*, 131 S. Ct. at 2065 n.2.

Sections 271(b) and (c) define two types of secondary liability. Section 271(b), the provision at issue here, states that "[w]hoever actively induces infringement of a patent shall be liable as an infringer." 35 U.S.C. 271(b). Section 271(c) imposes secondary liability on any person who sells a component of a patented invention, "knowing the same to be especially made or especially adapted for use in an infringement of such patent." 35 U.S.C. 271(c). In *Aro II*, the Court construed Section 271(c)'s knowledge requirement to require a showing that the contributory infringer knew that "the combination for which his com-

---

the infringing nature of the induced acts, such that a good-faith belief in non-infringement defeats that scienter—is not squarely before the Court. This brief addresses the knowledge-of-infringement issue, however, because the Federal Circuit's assumption that such knowledge is required was central to that court's reasoning. See Pet. App. 11a-13a; Br. in Opp. 8-13.

ponent was especially designed was both patented and infringing." 377 U.S. at 488. The Court held that the defendant had obtained that required knowledge when it received a letter from the patentee, informing it of the patent and of the patentee's belief that the defendant's conduct was infringing. *Id.* at 490-491; see pp. 13-16, *infra*.

2. In *Global-Tech*, this Court addressed the intent required for inducement liability under Section 271(b). The Court explained that Section 271(b)'s reference to "actively induc[ing]" infringement indicates that the defendant must "tak[e] * * * affirmative steps to bring about the desired result," and that the provision therefore requires "at least some intent." 131 S. Ct. at 2065. The Court held that Section 271(b) "requires knowledge of the existence of the patent that is infringed," and that willful blindness as to the existence of the patent could satisfy that requirement. *Id.* at 2068-2070.

In holding that knowledge of the patent is required for inducement liability under Section 271(b), the Court in *Global-Tech* did not purport to conduct an independent examination of that provision's text and history. Rather, the Court concluded that, as a matter of statutory *stare decisis*, *Aro II*'s construction of Section 271(c)'s knowledge requirement "resolved the question" of the mens rea required by Section 271(b). 131 S. Ct. at 2067. The Court explained that, "[i]n *Aro II*, a majority held that a violator of [Section] 271(c) must know 'that the combination for which his component was especially designed was both patented and infringing,' and * * * that conclusion compels this same knowledge for liability under [Section] 271(b)." *Ibid.* (citation omitted). The Court concluded that,

because Sections 271(b) and (c) "have a common origin in the pre-1952 understanding of contributory infringement," there was no sound reason to construe the two provisions differently. *Id.* at 2068. The Court accordingly held that Section 271(b) "requires knowledge of the existence of the patent that is infringed." *Id.* at 2068-2070.

Global-Tech thus clearly establishes that a defendant may be held liable under Section 271(b) only if it knew about the patent at issue. *Global-Tech* does not clearly resolve, however, whether the defendant must additionally possess actual knowledge that the induced acts constitute infringement. On the one hand, certain passages in *Global-Tech* suggest that Section 271(b) requires only knowledge of (or willful blindness to) the patent's *existence*. See, *e.g.*, 131 S. Ct. at 2068 ("[W]e proceed on the premise that [Section] 271(c) requires knowledge of the existence of the patent that is infringed. Based on this premise, it follows that the same knowledge is needed for induced infringement under [Section] 271(b)."). On the other hand, prominent passages in *Global-Tech* suggest that Section 271(b) additionally requires proof that the defendant knew the induced conduct to be infringing. See, *e.g.*, *ibid.* ("[W]e now hold that induced infringement under [Section] 271(b) requires knowledge that the induced acts constitute patent infringement.").

The factual circumstances of *Global-Tech* did not require the Court to choose between those two potential understandings of Section 271(b)'s scienter requirement. The defendant, which had copied a patented deep fryer in designing its own fryer, argued only that it could not be held liable under Section 271(b) because it was unaware of the underlying pa-

tent. See 131 S. Ct. at 2064. The Court therefore "did not address" whether a defendant may be held liable for inducement when it knows of the patent but "believes that there is no infringement." 5 Donald S. Chisum, *Chisum on Patents* § 17.02[10], at 17-46 (2014) (*Chisum*).

3. The Federal Circuit has construed *Global-Tech* as reaffirming the court of appeals' existing precedent holding that Section 271(b) requires knowledge that the induced conduct actually infringes the patent. See *In re Bill of Lading Transmission & Processing Sys. Patent Litig.*, 681 F.3d 1323, 1339 (2012) (discussing *Global-Tech*, 131 S. Ct. at 2068); see also *DSU Med. Corp.* v. *JMS Co.*, 471 F.3d 1293, 1305-1306 (2006) (en banc). Plausible arguments can be made in support of that interpretation. Section 271(b) provides that the inducer must "actively induce[] *infringement*." 35 U.S.C. 271(b) (emphasis added). Given *Global-Tech*'s holding that Section 271(b) requires *some* form of scienter beyond the intent to induce the acts that are ultimately found to be infringing, it would be natural to construe the reference to "infringement" to require knowledge that the induced conduct actually practices the patent. As explained below, however, the better view, in light of *Global-Tech*'s holding that *Aro II* controls the construction of Section 271(b), is that such knowledge is not an element of unlawful inducement.

B. *Aro II* Indicates That Section 271(c) Does Not Require Knowledge That The Induced Acts Constitute Infringement, And Under *Global-Tech*, The Same Construction Applies To Section 271(b)

Aro II indicates that a defendant may be held liable under Section 271(b) if he knows about (or is willfully

blind to) the patent and a plausible allegation of infringement, even if he believes that the induced acts do not actually constitute infringement.

In concluding that Section 271(b) requires (at least) knowledge of the patent, the *Global-Tech* Court did not rely on an independent assessment of Section 271(b)'s text, history, and purposes. Although the Court discerned from Section 271(b)'s text that "some intent is required" it found the text ultimately "inconclusive" with respect to "the question presented"—*i.e.*, whether the required intent was knowledge of actual infringement or merely knowledge of the acts that constitute infringement. 131 S. Ct. at 2065. The Court viewed the "pre-1952 case law that [Section 271(b)] was meant to codify" as similarly "susceptible to conflicting interpretations." *Id.* at 2067. The Court therefore based its construction of Section 271(b)'s knowledge requirement solely on *Aro II*'s interpretation of Section 271(c). *Ibid.*

In *Aro II*, the Court held that Section 271(c) requires knowledge that the "combination for which [the defendant's] component was especially designed was both patented and infringing." 377 U.S. at 488. The Court concluded that its "interpretation of the knowledge requirement affords Aro no defense with respect to replacement-fabric sales made after January 2, 1954." *Id.* at 490. The crucial event that occurred on January 2, 1954, was that the patent holder (AB) sent Aro a letter informing Aro of the relevant patent and of AB's view that Aro's conduct was infringing. *Id.* at 489-490 (describing letter, which asserted that AB owned the patent, that the relevant product sales were not licensed, and that AB believed the sales constituted contributory infringement). The

Court appeared to treat that communication as conclusively establishing Aro's scienter for purposes of Section 271(c). See *id.* at 490-491.

The Court in *Aro II* did not discuss whether Aro continued to believe, even after receiving AB's letter, that the conduct it facilitated was actually non-infringing. Thus, although the Court referred to the defendant's knowledge that the conduct it facilitated "constituted infringement," 377 U.S. at 488, the Court found that knowledge to be established by Aro's receipt of an *allegation* of infringement. The Court in *Aro II* focused not on whether the defendant *believed* that the conduct it facilitated was actually infringing, but on whether the defendant had been given adequate warning of the risk of secondary liability.[2]

Accordingly, *Aro II* stands for the proposition that an alleged contributory infringer has the requisite knowledge that the "combination for which his component was especially designed was both patented and infringing," 377 U.S. at 488, when he knows about the patent and the patentee's claim that the activity in question is infringing. See 5 R. Carl Moy, *Moy's Walker on Patents* § 15:24, at 15-150 (4th ed. 2012) (*Walker*) (*Aro II* "held that the defendant was not * * * liable for contributory infringement until it

---

[2] The parties in *Aro II* vigorously contested the question whether the induced conduct constituted direct infringement, and the Court divided five to four on that issue. While the five-Member majority found it "clear" that purchasers of Aro's product had "committed direct infringement," 377 U.S. at 483, the four dissenting Justices would have held that no direct infringement had occurred. See *id.* at 519-520 (Black, J., dissenting); Pet. Br. at 29-30, *Aro II*, *supra* (No. 75). It is therefore far from clear whether Aro possessed actual knowledge that the conduct it facilitated constituted infringement.

became aware of both the patent in suit, and the charge that its activities were leading to direct infringement."); 5 *Chisum* § 17.03[2], at 17-63 to 17-65 (same); see also *Armstrong* v. *Motorola, Inc.*, 374 F.2d 764, 773 (7th Cir.) (same), cert. denied, 389 U.S. 830 (1967). Since (as the Court subsequently held in *Global-Tech*) Sections 271(b) and (c) impose equivalent scienter requirements, *Aro II* indicates that, at least so long as the defendant is aware of the patent and of plausible allegations that the induced conduct is infringing, he can be held liable under Section 271(b), even if he believes in good faith that the induced conduct does not actually practice the patent.[3]

---

[3] In 2011, Congress enacted 35 U.S.C. 298, which provides that "[t]he failure of an infringer to obtain the advice of counsel with respect to any allegedly infringed patent * * * may not be used to prove that the accused infringer willfully infringed the patent or that the infringer intended to induce infringement of the patent." Section 298 reflects Congress's determination that the defendant's failure to obtain an opinion of counsel should not be used to establish the knowledge required either for willful direct infringement (see 35 U.S.C. 284; pp. 27-28, *infra*) or for inducement liability under Section 271(b). See H.R. Rep. No. 98, 112th Cong., 1st Sess. 53 (2011). Section 298 does not logically imply any particular view as to the precise level of knowledge that Section 271(b) requires. Even if Section 271(b) requires only knowledge of the patent and of an allegation of infringement, Congress could have determined that an accused inducer's failure to obtain an attorney opinion should not be used as evidence of, *e.g.*, the inducer's willful blindness with respect to the patent's existence. Cf. *Global-Tech*, 131 S. Ct. at 2071-2072.

C. Considerations Of Patent Policy Support Construing Section 271(b) To Require Only Knowledge Of The Patent And The Charge Of Infringement

Construing Section 271(b) to require only knowledge of the patent, combined with knowledge that the patentee views the induced acts as infringing, strikes an appropriate balance between protecting patent rights and ensuring that accused inducers are not held liable for innocent conduct. Under that interpretation, a patentee can provide the potential inducer with the requisite knowledge by notifying him about the patent and the allegation of infringement.[4] Once the inducer knows about the patent and the patentee's view of its scope, he can order his conduct accordingly, *e.g.*, by modifying his product, maintaining his present course, or (if an actual controversy exists) seeking a judicial ruling to clarify his rights, see *MedImmune, Inc.* v. *Genentech, Inc.*, 549 U.S. 118, 127-128 (2007).

If the inducer is given such warning and continues to engage in conduct that may induce infringement, he may reasonably be expected to bear the risk of an inducement suit. Under that approach, the inducer cannot be held liable under Section 271(b) if its view of the infringement question is ultimately found to be correct—*i.e.*, if the jury or the court determines that the induced acts do not infringe the patent. See *Limelight Networks, Inc.* v. *Akamai Techs., Inc.*, 134 S. Ct.

---

[4] The Patent Act reflects a judgment that notice by the patentee is relevant to the appropriate remedies for infringement. Section 287(a) provides that, if a patented product is not marked as such, an infringer may be liable for damages only for infringement that occurs after the infringer "was notified of the infringement." 35 U.S.C. 287(a).

2111, 2117 (2014) (explaining that this Court's "case law leaves no doubt that inducement liability may arise if, but only if, there is direct infringement") (brackets, ellipsis, citation, and internal quotation marks omitted). But if the induced conduct is found to be infringing, the inducer cannot escape liability by arguing that it (wrongly) believed the patentee's assertion of rights to be mistaken.

By contrast, if Section 271(b) also requires proof that the alleged inducer subjectively believed that the induced conduct was infringing, the patentee will never be able to confer the requisite knowledge on the inducer. Even when the induced conduct is ultimately found to be infringing, inducers will often be able to identify plausible, good-faith bases for questioning that conclusion. The existence of direct infringement often turns on complex legal and factual questions, such as how to construe the claims of the patent in suit, whether the allegedly infringing technology practices all the elements of the patented technology, and whether the doctrine of equivalents applies. See *Markman* v. *Westview Instruments, Inc.*, 517 U.S. 370, 384-388 (1996); *Virnetx, Inc.* v. *Cisco Sys., Inc.*, 767 F.3d 1308, 1321-1323 (Fed. Cir. 2014). As a result, it may often be difficult for the patentee to disprove the defendant's assertion that it believed the induced conduct to be non-infringing.

II. EVEN IF A GOOD-FAITH BELIEF IN NON-INFRINGEMENT IS TREATED AS A DEFENSE TO LIABILITY UNDER SECTION 271(b), IT DOES NOT FOLLOW THAT A GOOD-FAITH BELIEF THAT A PATENT IS INVALID IS ALSO A DEFENSE

For the reasons stated above, the Federal Circuit was wrong to assume that the requisite intent under

Section 271(b) includes knowledge of the infringing nature of the induced acts. But even if that premise is accepted, the court of appeals' conclusion does not follow. The text and structure of the Patent Act establish that even an invalid patent can be infringed. A defendant who believes that the patent is invalid therefore does not lack knowledge that the induced conduct infringes the patent. To be sure, if the patent is actually found to *be* invalid, neither the direct infringer nor the person who induces that infringement can be held liable under the Patent Act. But if any challenge to the patent's validity is ultimately rejected, the accused inducer's good-faith belief that the challenge had merit is no defense to liability under Section 271(b).

A. The Text And Structure Of The Patent Act Establish That A Good-Faith Belief In Invalidity Does Not Negate The Scienter Required By Section 271(b)

1. Section 271(b) requires scienter with respect to "infringement," and a belief that the patent is invalid does not negate a defendant's knowledge of "infringement"

By providing that "[w]hoever actively induces infringement of a patent shall be liable as an infringer," Section 271(b) defines inducement liability in terms of direct infringement. 35 U.S.C. 271(b); see *Limelight*, 134 S. Ct. at 2117. Inducement of infringement thus consists of three elements: an act of direct "infringement," the inducer's active steps to bring about that infringement, and scienter. *Ibid;* see *Global-Tech*, 131 S. Ct. at 2065.

To establish the direct-infringement element of inducement, the patentee must demonstrate only that

the induced parties practiced all the elements of a claimed product or method without authorization. See 35 U.S.C. 271(a) ("whoever without authority makes, uses, offers to sell, or sells any patented invention"); see also *Global-Tech*, 131 S. Ct. at 2065 n.2; *Aro II*, 377 U.S. at 484. The validity of the patent is not an element of direct infringement. See 35 U.S.C. 271(a); 5 *Chisum* § 16.01, at 16-5. Rather, an assertion that the patent is invalid is an affirmative defense that "can preclude enforcement of a patent against otherwise infringing conduct." 6A *Chisum* § 19.01, at 19-5; cf. *Microsoft Corp.* v. *i4i Ltd. P'ship*, 131 S. Ct. 2238, 2246 (2011) (defendant must prove invalidity of patent by clear and convincing evidence). A patent can be found to be infringed—because someone has performed all of its elements without authorization—even if it is ultimately found to be invalid and therefore not capable of giving rise to liability. See *Medtronic, Inc.* v. *Cardiac Pacemakers, Inc.*, 721 F.2d 1563, 1583 (Fed. Cir. 1983) ("Though an invalid claim cannot give rise to liability for infringement, whether it is infringed is an entirely separate question capable of determination without regard to its validity."). A defendant's belief that the patent is invalid is likewise irrelevant to direct infringement, since Section 271(a) is a strict-liability tort. *Global-Tech*, 131 S. Ct. at 2065 n.2.

In addition to establishing that the induced conduct constitutes direct infringement, the plaintiff in a Section 271(b) case must prove that the alleged inducer took "affirmative steps to bring about" the infringing conduct. *Global-Tech*, 131 S. Ct. at 2065. The plaintiff must also prove that the defendant was aware of (or was willfully blind to) the patent's existence. *Id.* at

2065-2068. As explained above, although *Global-Tech* does not resolve whether the defendant must know in addition that the induced conduct actually infringed the patent, the better view is that such knowledge is not required.

Regardless of how that question is ultimately decided, however, Section 271(b) neither requires knowledge of the patent's validity nor suggests that a good-faith belief in invalidity is a proper defense. Section 271(b) requires that the defendant have "actively induce[d] *infringement*." 35 U.S.C. 271(b) (emphasis added). As the Court in *Global-Tech* explained, that language indicates that the required scienter concerns "infringement." 131 S. Ct. at 2065 (Section 271(b) requires intent to bring about the "desired result," which is infringement.). The inducee's unauthorized performance of all steps of a patented method constitutes direct "infringement," even if the patent is ultimately found to be invalid. Thus, even if Section 271(b) is held to require proof that the defendant knew the induced conduct would constitute actual "infringement," the defendant's good-faith belief in the invalidity of the patent would not suggest that such knowledge was lacking.[5]

---

[5] The court below asserted that, although a good-faith belief in invalidity will *sometimes* preclude liability, it will not *necessarily* have that effect. Pet. App. 13a & n.1; accord Br. in Opp. 7. Neither the court nor respondent has explained how, if a good-faith belief in invalidity establishes that the defendant "can hardly be said" to have intended to induce infringement, Pet. App. 12a, there could ever be circumstances in which the defendant believed the patent was invalid but still intended to induce infringement. The court also did not explain how the jury should decide whether a defendant who believed the patent was invalid possesses the scienter necessary for inducement liability.

2. *The Federal Circuit's contrary conclusion was based on the erroneous view that an invalid patent cannot be infringed*

In concluding that there is "no principled distinction" between a good-faith belief in non-infringement and a good-faith belief in invalidity, the Federal Circuit asserted that "[i]t is axiomatic that one cannot infringe an invalid patent." Pet. App. 11a. In fact, "infringement and invalidity are separate issues under the patent code." *Id.* at 56a (Reyna, J., dissenting from the denial of rehearing en banc). A patent is infringed, regardless of its validity, if the defendant has practiced all of its elements without authorization. 35 U.S.C. 271(a); *Global-Tech*, 131 S. Ct. at 2065 n.2. Thus, a "more accurate statement" of the law is that a finding of invalidity does not negate the *fact* of infringement, but instead precludes *liability* for that infringement. Pet. App. 57a (Reyna, J., dissenting from the denial of rehearing en banc); accord 6 *Walker* § 17:15, at 17-47 to 17-48 ("Once the patent is * * * held [invalid], no liability for infringement will attach.").

a. Consistent with that understanding, the Patent Act identifies "[n]oninfringement" and "[i]nvalidity of the patent" as *separate* defenses to an infringement suit. 35 U.S.C. 282(b)(1) and (2).[6] As P.J. Federico,

---

[6] Congress similarly characterized non-infringement and invalidity as separate issues in prohibiting the importation into the United States of articles that "infringe a valid and enforceable United States patent." 19 U.S.C. 1337(a)(1)(B)(i). By the same token, a company seeking approval for a generic version of a patented brand-name drug may certify to the Food and Drug Administration that the patent "is invalid or will not be infringed by the

one of the architects of the Patent Act of 1952, explained, the defense of "[n]oninfringement" entails the assertion that "the patented invention has not been made, used or sold by the defendant," while the defense of "[i]nvalidity" includes "most of the usual defenses such as lack of novelty, prior publication, prior public use, [or] lack of invention." *Commentary on the New Patent Act*, 75 J. Pat. & Trademark Off. Soc'y 161, 215 (1993). If demonstrating the patent's invalidity were a means of rebutting a charge that infringement has occurred, Congress would not have established invalidity and non-infringement as independent defenses.

b. This Court and the Federal Circuit (until the decision below) have consistently recognized that infringement and validity are independent questions, such that a patent can be infringed whether or not it is ultimately held to be valid.

In *Cardinal Chemical Co.* v. *Morton International, Inc.*, 508 U.S. 83 (1993), this Court stated that "[a] party seeking a declaratory judgment of invalidity presents a claim independent of the patentee's charge of infringement." *Id.* at 96. The Court characterized non-infringement and invalidity as "alternative grounds" for dismissing an infringement suit. *Id.* at 98; accord *Deposit Guar. Nat'l Bank* v. *Roper*, 445 U.S. 326, 334 (1980) (explaining that an accused infringer "may prevail either by successfully attacking the validity of the patent or by successfully defending the charge of infringement"). The question presented in *Cardinal Chemical* was whether a challenge to the validity of a patent was necessarily mooted by a ruling

---

manufacture, use, or sale of the [company's generic] drug." 21 U.S.C. 355(j)(2)(A)(vii)(IV); see 35 U.S.C. 271(e)(5).

that the accused device did not infringe. 508 U.S. at 91. In concluding that the Federal Circuit's no-infringement holding did not moot the invalidity issue, the Court explained that, if it reviewed the Federal Circuit's judgment of non-infringement and "reverse[d] that determination"—thereby holding the patent infringed—the Court could go on to consider "the question of validity." *Id.* at 97. That reasoning presupposed that a court may address infringement, and may conclude that a patent has been infringed, before determining whether the patent is valid.

The Federal Circuit has also consistently held that a patent's invalidity does not negate infringement, but simply prevents the imposition of liability. The court has occasionally concluded that a particular patent was infringed but invalid. See, *e.g.*, *SmithKline Beecham Corp.* v. *Apotex Corp.*, 403 F.3d 1331, 1346 (2005), cert. denied, 547 U.S. 1218 (2006); *Fromson* v. *Advance Offset Plate, Inc.*, 755 F.2d 1549, 1553-1554 (1985); cf. *CEATS, Inc.* v. *Continental Airlines, Inc.*, 755 F.3d 1356, 1358 (2014) (jury found patent infringed but invalid), petition for cert. pending, No. 14-681 (filed Dec. 4, 2014); *Robert Bosch LLC* v. *Pylon Mfg. Corp.*, 659 F.3d 1142, 1145 (2011) (same); *Unique Concepts, Inc.* v. *Brown*, 939 F.2d 1558, 1565 (1991) (Rich, J., dissenting) ("Courts constantly hold claims infringed but invalid.").

The Federal Circuit has also decided questions of procedure and practice on the understanding that infringement and validity are distinct issues. In *Pandrol USA, LP* v. *Airboss Railway Products, Inc.*, 320 F.3d 1354 (2003), the court held that an accused infringer had not waived a defense of invalidity by failing to raise it in response to the patentee's motion for

summary judgment on infringement. The court reasoned that the patentee "did not request summary judgment of liability, only infringement," and that "Supreme Court precedent and our cases make clear that patent infringement and patent validity are treated as separate issues." *Id.* at 1364-1365 (citing, *inter alia*, *Cardinal Chem.*, 508 U.S. at 96); see, *e.g.*, *Medtronic*, 721 F.2d at 1583 (same); see also *Tenneco Resins, Inc.* v. *Reeves Bros.*, 752 F.2d 630, 635 n.4 (Fed. Cir. 1985) (infringement and validity are "distinct and separate issues"). Similarly in *International Medical Prosthetics Research Assocs., Inc.* v. *Gore Enterprise Holdings, Inc.*, 787 F.2d 572 (1986), the Federal Circuit held that a plaintiff who seeks a declaratory judgment that a patent is invalid may establish an actual controversy by (1) alleging that he faces a threatened infringement action and (2) either contesting infringement or "admit[ting] infringement while asserting that the patent is invalid and that no liability for the infringement can therefore exist." *Id.* at 575; see, *e.g.*, *A.B. Chance Co.* v. *RTE Corp.*, 854 F.2d 1307, 1309 (Fed. Cir. 1988).

In sum, as Judge Giles Rich—another of the principal architects of the Patent Act of 1952—put it, the assertion that "invalid claims cannot be infringed" is "a nonsense statement." See *Spectra-Physics, Inc.* v. *Coherent, Inc.*, 827 F.2d 1524, 1535 (Fed. Cir.), cert. denied, 484 U.S. 954 (1987).

c. The Federal Circuit therefore erred in concluding that "one cannot infringe an invalid patent." Pet. App. 11a. Because infringement can exist whether or not the patent is valid, a defendant who believes the patent is invalid may nonetheless know that infringement is occurring. Thus, even if a good-faith belief in

non-infringement were a defense to inducement liability under Section 271(b), it would not follow that a good-faith belief in invalidity is also a defense. An inducer who knows that the induced conduct practices a patent, while believing that the patent is invalid, knows that it is inducing "infringement" as that term is properly understood.

3. *Respondent's arguments in support of the Federal Circuit's decision are unpersuasive*

Respondent contends that *Pandrol*, *Medtronic*, and the other decisions discussed above are irrelevant to the question presented here because those decisions involved direct infringement, and the principle that "infringement and validity are separate questions does not foreclose invalidity from affecting the state of mind of an accused *inducer*." Br. in Opp. 9. That argument is misconceived.

A defendant's belief in invalidity unquestionably "affect[s] [his] state of mind" (Br. in Opp. 9), and Congress *could* have drafted a statute that made knowledge of a patent's validity an essential element of unlawful inducement. Nothing in the text of Section 271(b), however, suggests that such knowledge is required under current law. Section 271(b) states that "[w]hoever actively induces infringement of a patent shall be liable as an infringer." 35 U.S.C. 271(b). Even if Section 271(b) is read to require knowledge that the induced conduct constitutes "infringement," that simply means that the defendant must be shown to have deliberately brought about the unauthorized practice of a patent. Because even an invalid patent may be infringed, proof of intent to bring about unauthorized practice of the patent is sufficient to show that the defendant "actively induce[d] infringement,"

regardless of the defendant's state of mind concerning the patent's validity.[7]

Respondent also relies on two Federal Circuit decisions for the proposition, rejected by the numerous authorities discussed above, that "'patent infringement' cannot exist if the asserted patent is invalid." Br. in Opp. 9-10 (citing *Prima Tek II, L.L.C.* v. *Polypap, S.A.R.L.*, 412 F.3d 1284, 1291 (Fed. Cir. 2005), and *Richdel, Inc.* v. *Sunspool Corp.*, 714 F.2d 1573, 1580 (Fed. Cir. 1983)); see Pet. App. 11a-12a. Both decisions stated that "there can be no * * * induced infringement of invalid patent claims." *Prima Tek II*, 412 F.3d at 1291. In both decisions, however, the court simply explained that it was unnecessary to resolve allegations of infringement when the patent had been held invalid. Nothing turned on the court's description of invalidity as precluding infringement, rather than simply precluding liability for infringement. Those isolated statements therefore are entitled to no meaningful weight.

Finally, respondent relies (Br. in Opp. 12-13) on the fact that, under Federal Circuit precedent, a "reasonable belief of invalidity is recognized as a defense to a charge of willful infringement." Those decisions do

---

[7] Respondent also relies (Supp. Br. 6; Br. in Opp. 10 n.4) on this Court's statement in *Metro-Goldwyn-Mayer Studios Inc.* v. *Grokster, Ltd.*, 545 U.S. 913, 937 (2005), that inducement liability targets "purposeful, culpable expression and conduct." *Ibid.* In *Global-Tech*, the Court stated that the *Grokster* "dicta * * * may be read as interpreting the pre-1952 cases" to require that a defendant "*knew of the patent*" and intended to facilitate the infringing use. 131 S. Ct. at 2066-2067 (citation omitted). A good-faith belief that the patent is invalid would vitiate that "culpable" knowledge only if an invalid patent could not be infringed. For the reasons stated in the text, that is not the case.

not support respondent's view that a belief in the patent's invalidity is also a defense to inducement liability under Section 271(b).

Under Section 284 of the Patent Act, courts may "increase the damages up to three times the amount" of actual damages in appropriate cases. 35 U.S.C. 284; see *Aro II*, 377 U.S. at 508. Although Section 284 does not provide any standard for determining when increased damages should be awarded, the Federal Circuit has held that enhanced damages may be appropriate when the infringer has acted willfully, *i.e.*, when it "act[s] despite an objectively high likelihood that its actions constitute[] infringement of a *valid* patent." *In re Seagate Tech., LLC*, 497 F.3d 1360, 1371 (2007) (emphasis added), cert. denied, 552 U.S. 1230 (2008); see Pet. App. 23a (Newman, J., concurring in part and dissenting in part). Because the standard for determining when a defendant has willfully infringed is judicially created rather than statutorily prescribed, it sheds no light on Congress's understanding of the scienter required under Section 271(b). And because the purpose of awarding enhanced damages is to punish those defendants whose conduct is egregious in a way that run-of-the-mine infringement is not, see *Aro II*, 377 U.S. at 508, it is unsurprising that a finding of willfulness requires a more culpable mental state than does the imposition of inducement liability.

B. Treating A Good-Faith Belief In Invalidity As a Defense To Inducement Liability Would Substantially Undermine Section 271(b)'s Efficacy In Enforcing Patent Rights

1. The Federal Circuit did not identify any reason to conclude that adding belief in invalidity to the

available defenses to inducement is justified by patent-policy concerns. Although a good-faith belief in invalidity has never previously been recognized as a defense to inducement, there is no indication that inducement liability has swept too broadly, or discouraged innovation, in the absence of the defense. See Pet. App. 59a (Reyna, J., dissenting from the denial of rehearing en banc). Any accused inducer who believes that the patent in suit is invalid may challenge the patent by raising an affirmative defense to the patentee's suit, filing a declaratory-judgment action, or filing a petition for review before the PTO. See *MedImmune*, 549 U.S. at 127-128; 35 U.S.C. 311, 321. If the inducer establishes that the patent is actually invalid, that is a complete defense to any inducement claim.

Nor does the defense serve the interests underlying the Patent Act. While adjudicating the validity of patents serves the public interest in ensuring against "grant[ing] monopoly privileges to the holders of invalid patents," *Cardinal Chem.*, 508 U.S. at 101, adjudicating the defendant's belief in invalidity does not serve that purpose. Indeed, the cases in which the belief-in-invalidity defense will be outcome-determinative are those in which the patent is held to be valid, but the factfinder concludes that the defendant wrongly held a contrary view.

The possibility of being sued for direct or indirect infringement encourages further innovation by giving commercial actors an additional incentive to design around existing patents. See *Slimfold Mfg. Co.* v. *Kinkead Indus.*, 932 F.2d 1453, 1457 (Fed. Cir. 1991). Although recognition of a belief-in-non-infringement defense is ultimately unwarranted (see pp. 9-18, *su-*

pra), such a defense would at least reward inducers who have made sincere (though unsuccessful) efforts to design around patents, since proof of such efforts would help to buttress the asserted defense. A belief-in-invalidity defense would provide no similar encouragement to avoid infringement, but would simply encourage inducers to develop invalidity theories.

2. Recognizing a belief-in-invalidity defense would also substantially diminish the efficacy of Section 271(b) in protecting patent holders' exclusive rights. "[I]t is often more difficult to determine whether a patent is valid than whether it has been infringed." *Cardinal Chem.*, 508 U.S. at 99. In the class of cases where the availability of the defense would be outcome-determinative—*i.e.*, those cases where the patent is ultimately found to be both valid and infringed—accused inducers therefore can plausibly claim a good-faith belief in invalidity even more often than they can plausibly claim a good-faith belief in non-infringement. Invalidity questions often turn on numerous fact-specific assessments, such as the state of the art at the time of the invention, the "scope and content of the prior art," and the "differences between the prior art and the claims at issue." *Graham* v. *John Deere Co.*, 383 U.S. 1, 17 (1966) (obviousness). They may also often involve an analysis of whether the claims "inform those skilled in the art about the scope of the invention with reasonable certainty," *Nautilus, Inc.* v. *Biosig Instruments, Inc.*, 134 S. Ct. 2120, 2129 (2014), or whether the claims enable others to make nd use the invention, see 35 U.S.C. 112.

As a result, accused inducers are likely to raise the new defense in most if not all Section 271(b) cases. Indeed, patent practitioners are already advising their

clients that, when they are notified by a patent holder that they may be inducing infringement, they should quickly obtain an "opinion of counsel" to support a claim of a good-faith belief in invalidity, because such an opinion "can be particularly helpful" in "avoid[ing] inducement liability." *E.g.*, Brian D. Coggio, *Avoid Inducement Liability With Early Opinion Of Counsel* (Mar. 21, 2014), http://www.law360.com/articles/516267/avoid-inducement-liability-with-early-opinion-of-counsel. Because the accused infringer's belief in invalidity need only be held in good faith, and need not be meritorious or even objectively reasonable, see Pet. App. 20a, it will often be difficult for the patentee to rebut the defense.[8]

The availability of the defense also may render inducement litigation substantially more burdensome. An accused inducer may assert that it had a good-faith belief in multiple theories of invalidity—even theories that it does not intend to use in actually challenging the validity of the patent at trial. See Nathan A.

---

[8] Throughout its brief in opposition (at 7-12), respondent characterized the necessary belief in invalidity as a "*reasonable* belief." Although the reasonableness of the belief may be relevant evidence that it was held in good faith, the Federal Circuit's opinion makes clear that objective reasonableness is not a prerequisite to establishing the defense. Pet. App. 11a-12a, 20a. A requirement of objective reasonableness would narrow the circumstances in which an inducer could avoid liability. But it would also be in tension with *Global-Tech*, which indicates that even "deliberate indifference to a known risk that a patent exists" is insufficient to establish Section 271(b)'s scienter element. 131 S. Ct. at 2068. If knowledge of the patent's validity were treated for this purpose as analogous to knowledge of the patent's existence, there would be no evident justification for requiring an objectively reasonable belief that the patent was invalid.

Sloan, *Think it is Invalid? A New Defense to Negate Intent for Induced Infringement*, 23 Fed. Cir. B.J. 613, 618 (2014) ("[p]resenting two sets of prior art," one supporting a good-faith belief in invalidity, and one supporting an actual challenge to the patent's validity, "provides two bites at the same apple"). The patentee will then need to rebut the defendant's asserted belief in multiple theories of invalidity, which will necessitate additional discovery and increase the number and complexity of the issues the jury must resolve.

If a good-faith belief in invalidity is a defense to an inducement suit, moreover, there is no reason that a defendant's good-faith belief in any other potential ground for avoiding infringement liability should not also be a defense. Section 282 provides several other defenses to infringement liability, including that the patentee procured the patent by committing fraud on the PTO, or that the patentee engaged in patent misuse. See generally 35 U.S.C. 282; 6A *Chisum* § 19.01, at 19-5 to 19-9. If the Federal Circuit's reasoning is taken to its logical conclusion, accused inducers will have a plethora of good-faith defenses that will greatly reduce patentees' ability to establish inducement.

Inducement liability provides an important means of enforcing patent rights. Although the Federal Circuit's belief-in-invalidity defense would not limit the patent holder's rights against direct infringers under Section 271(a), Section 271(b) reflects Congress's understanding that it is often impractical or impossible to enforce those rights against all direct infringers. Cf. *Aro II*, 377 U.S. at 511 (explaining that the purpose of Section 271(c) "is essentially, as was stated in the earlier versions of the bill that became

[Section] 271(c), 'to provide for the protection of patent rights where enforcement against direct infringers is impracticable'") (quoting H.R. 5988, 80th Cong., 2d Sess. 1 (1948); H.R. 3866, 81st Cong., 1st Sess. 1 (1949)); *ibid.* (noting testimony of Giles Rich that "[t]here may be twenty or thirty percent of all the patents that are granted that cannot practically be enforced against direct infringers") (citation omitted); *Metro-Goldwyn-Mayer Studios Inc.* v. *Grokster, Ltd.*, 545 U.S. 913, 929-930 (2005) (explaining that principles of secondary liability serve an analogous function in copyright cases). Affirmance of the judgment below would substantially undermine that function by engrafting onto Section 271(b) an additional scienter requirement that is difficult to satisfy and is not justified by the Patent Act's text and structure.

CONCLUSION

The judgment of the court of appeals should be vacated and the case remanded for further proceedings.

Respectfully submitted.

DONALD B. VERRILLI, JR.
Solicitor General
JOYCE R. BRANDA
Acting Assistant Attorney General
MALCOLM L. STEWART
Deputy Solicitor General
GINGER D. ANDERS
Assistant to the Solicitor General
MARK R. FREEMAN
THOMAS PULHAM
Attorneys

SARAH T. HARRIS
General Counsel
NATHAN K. KELLEY
Solicitor
THOMAS W. KRAUSE
Deputy Solicitor
FRANCES M. LYNCH
BRIAN T. RACILLA
Associate Solicitors
United States Patent and Trademark Office

JANUARY 2015

APPENDIX

1. 35 U.S.C. 271 provides:

Infringement of patent

(a) Except as otherwise provided in this title, whoever without authority makes, uses, offers to sell, or sells any patented invention, within the United States or imports into the United States any patented invention during the term of the patent therefor, infringes the patent.

(b) Whoever actively induces infringement of a patent shall be liable as an infringer.

(c) Whoever offers to sell or sells within the United States or imports into the United States a component of a patented machine, manufacture, combination or composition, or a material or apparatus for use in practicing a patented process, constituting a material part of the invention, knowing the same to be especially made or especially adapted for use in an infringement of such patent, and not a staple article or commodity of commerce suitable for substantial noninfringing use, shall be liable as a contributory infringer.

(d) No patent owner otherwise entitled to relief for infringement or contributory infringement of a patent shall be denied relief or deemed guilty of misuse or illegal extension of the patent right by reason of his having done one or more of the following: (1) derived revenue from acts which if performed by another without his consent would constitute contributory infringement of the patent; (2) licensed or authorized another

to perform acts which if performed without his consent would constitute contributory infringement of the patent; (3) sought to enforce his patent rights against infringement or contributory infringement; (4) refused to license or use any rights to the patent; or (5) conditioned the license of any rights to the patent or the sale of the patented product on the acquisition of a license to rights in another patent or purchase of a separate product, unless, in view of the circumstances, the patent owner has market power in the relevant market for the patent or patented product on which the license or sale is conditioned.

(e)(1) It shall not be an act of infringement to make, use, offer to sell, or sell within the United States or import into the United States a patented invention (other than a new animal drug or veterinary biological product (as those terms are used in the Federal Food, Drug, and Cosmetic Act and the Act of March 4, 1913) which is primarily manufactured using recombinant DNA, recombinant RNA, hybridoma technology, or other processes involving site specific genetic manipulation techniques) solely for uses reasonably related to the development and submission of information under a Federal law which regulates the manufacture, use, or sale of drugs or veterinary biological products.

(2) It shall be an act of infringement to submit—

(A) an application under section 505(j) of the Federal Food, Drug, and Cosmetic Act or described in section 505(b)(2) of such Act for a drug claimed in a patent or the use of which is claimed in a patent,

(B) an application under section 512 of such Act or under the Act of March 4, 1913 (21 U.S.C. 151-158) for a drug or veterinary biological product which is not primarily manufactured using recombinant DNA, recombinant RNA, hybridoma technology, or other processes involving site specific genetic manipulation techniques and which is claimed in a patent or the use of which is claimed in a patent, or

(C)(i) with respect to a patent that is identified in the list of patents described in section 351(*l*)(3) of the Public Health Service Act (including as provided under section 351(*l*)(7) of such Act), an application seeking approval of a biological product, or

(ii) if the applicant for the application fails to provide the application and information required under section 351(*l*)(2)(A) of such Act, an application seeking approval of a biological product for a patent that could be identified pursuant to section 351(*l*)(3)(A)(i) of such Act,

if the purpose of such submission is to obtain approval under such Act to engage in the commercial manufacture, use, or sale of a drug, veterinary biological product, or biological product claimed in a patent or the use of which is claimed in a patent before the expiration of such patent.

(3) In any action for patent infringement brought under this section, no injunctive or other relief may be granted which would prohibit the making, using, offering to sell, or selling within the United States or

importing into the United States of a patented invention under paragraph (1).

(4) For an act of infringement described in paragraph (2)—

(A) the court shall order the effective date of any approval of the drug or veterinary biological product involved in the infringement to be a date which is not earlier than the date of the expiration of the patent which has been infringed,

(B) injunctive relief may be granted against an infringer to prevent the commercial manufacture, use, offer to sell, or sale within the United States or importation into the United States of an approved drug, veterinary biological product, or biological product,

(C) damages or other monetary relief may be awarded against an infringer only if there has been commercial manufacture, use, offer to sell, or sale within the United States or importation into the United States of an approved drug, veterinary biological product, or biological product, and

(D) the court shall order a permanent injunction prohibiting any infringement of the patent by the biological product involved in the infringement until a date which is not earlier than the date of the expiration of the patent that has been infringed under paragraph (2)(C), provided the patent is the subject of a final court decision, as defined in section 351(k)(6) of the Public Health Service Act, in an action for infringement of the patent under section 351(*l*)(6) of such Act, and the biological product

has not yet been approved because of section 351(k)(7) of such Act.

The remedies prescribed by subparagraphs (A), (B), (C), and (D) are the only remedies which may be granted by a court for an act of infringement described in paragraph (2), except that a court may award attorney fees under section 285.

(5) Where a person has filed an application described in paragraph (2) that includes a certification under subsection (b)(2)(A)(iv) or (j)(2)(A)(vii)(IV) of section 505 of the Federal Food, Drug, and Cosmetic Act (21 U.S.C. 355), and neither the owner of the patent that is the subject of the certification nor the holder of the approved application under subsection (b) of such section for the drug that is claimed by the patent or a use of which is claimed by the patent brought an action for infringement of such patent before the expiration of 45 days after the date on which the notice given under subsection (b)(3) or (j)(2)(B) of such section was received, the courts of the United States shall, to the extent consistent with the Constitution, have subject matter jurisdiction in any action brought by such person under section 2201 of title 28 for a declaratory judgment that such patent is invalid or not infringed.

(6)(A) Subparagraph (B) applies, in lieu of paragraph (4), in the case of a patent—

(i) that is identified, as applicable, in the list of patents described in section 351(*l*)(4) of the Public Health Service Act or the lists of patents described

in section 351(*l*)(5)(B) of such Act with respect to a biological product; and

(ii) for which an action for infringement of the patent with respect to the biological product—

(I) was brought after the expiration of the 30-day period described in subparagraph (A) or (B), as applicable, of section 351(*l*)(6) of such Act; or

(II) was brought before the expiration of the 30-day period described in subclause (I), but which was dismissed without prejudice or was not prosecuted to judgment in good faith.

(B) In an action for infringement of a patent described in subparagraph (A), the sole and exclusive remedy that may be granted by a court, upon a finding that the making, using, offering to sell, selling, or importation into the United States of the biological product that is the subject of the action infringed the patent, shall be a reasonable royalty.

(C) The owner of a patent that should have been included in the list described in section 351(*l*)(3)(A) of the Public Health Service Act, including as provided under section 351(*l*)(7) of such Act for a biological product, but was not timely included in such list, may not bring an action under this section for infringement of the patent with respect to the biological product.

(f)(1) Whoever without authority supplies or causes to be supplied in or from the United States all or a substantial portion of the components of a patented invention, where such components are uncombined in whole or in part, in such manner as to actively induce

the combination of such components outside of the United States in a manner that would infringe the patent if such combination occurred within the United States, shall be liable as an infringer.

(2) Whoever without authority supplies or causes to be supplied in or from the United States any component of a patented invention that is especially made or especially adapted for use in the invention and not a staple article or commodity of commerce suitable for substantial noninfringing use, where such component is uncombined in whole or in part, knowing that such component is so made or adapted and intending that such component will be combined outside of the United States in a manner that would infringe the patent if such combination occurred within the United States, shall be liable as an infringer.

(g) Whoever without authority imports into the United States or offers to sell, sells, or uses within the United States a product which is made by a process patented in the United States shall be liable as an infringer, if the importation, offer to sell, sale, or use of the product occurs during the term of such process patent. In an action for infringement of a process patent, no remedy may be granted for infringement on account of the noncommercial use or retail sale of a product unless there is no adequate remedy under this title for infringement on account of the importation or other use, offer to sell, or sale of that product. A product which is made by a patented process will, for purposes of this title, not be considered to be so made after—

(1) it is materially changed by subsequent processes; or

(2) it becomes a trivial and nonessential component of another product.

(h) As used in this section, the term "whoever" includes any State, any instrumentality of a State, and any officer or employee of a State or instrumentality of a State acting in his official capacity. Any State, and any such instrumentality, officer, or employee, shall be subject to the provisions of this title in the same manner and to the same extent as any nongovernmental entity.

(i) As used in this section, an "offer for sale" or an "offer to sell" by a person other than the patentee, or any designee of the patentee, is that in which the sale will occur before the expiration of the term of the patent.

2. 35 U.S.C. 282 provides:

Presumption of validity; defenses

(a) IN GENERAL.—A patent shall be presumed valid. Each claim of a patent (whether in independent, dependent, or multiple dependent form) shall be presumed valid independently of the validity of other claims; dependent or multiple dependent claims shall be presumed valid even though dependent upon an invalid claim. The burden of establishing invalidity of a patent or any claim thereof shall rest on the party asserting such invalidity.

(b) DEFENSES.—The following shall be defenses in any action involving the validity or infringement of a patent and shall be pleaded:

(1) Noninfringement, absence of liability for infringement or unenforceability.

(2) Invalidity of the patent or any claim in suit on any ground specified in part II as a condition for patentability.

(3) Invalidity of the patent or any claim in suit for failure to comply with—

(A) any requirement of section 112, except that the failure to disclose the best mode shall not be a basis on which any claim of a patent may be canceled or held invalid or otherwise unenforceable; or

(B) any requirement of section 251.

(4) Any other fact or act made a defense by this title.

(c) NOTICE OF ACTIONS; ACTIONS DURING EXTENSION OF PATENT TERM.—In an action involving the validity or infringement of a patent the party asserting invalidity or noninfringement shall give notice in the pleadings or otherwise in writing to the adverse party at least thirty days before the trial, of the country, number, date, and name of the patentee of any patent, the title, date, and page numbers of any publication to be relied upon as anticipation of the patent in suit or, except in actions in the United States Court of Federal Claims, as showing the state of the art, and the name and address of any person who may be relied upon as

the prior inventor or as having prior knowledge of or as having previously used or offered for sale the invention of the patent in suit. In the absence of such notice proof of the said matters may not be made at the trial except on such terms as the court requires. Invalidity of the extension of a patent term or any portion thereof under section 154(b) or 156 because of the material failure—

(1) by the applicant for the extension, or

(2) by the Director,

to comply with the requirements of such section shall be a defense in any action involving the infringement of a patent during the period of the extension of its term and shall be pleaded. A due diligence determination under section 156(d)(2) is not subject to review in such an action.

AMICUS CURIAE BRIEF

Supreme Court, U.S.
FILED
JAN 27 2015
OFFICE OF THE CLERK

No. 13-896

IN THE
Supreme Court of the United States

COMMIL USA, LLC,

Petitioner,

v.

CISCO SYSTEMS, INC.,

Respondent.

ON WRIT OF CERTIORARI TO THE UNITED STATES COURT OF APPEALS FOR THE FEDERAL CIRCUIT

BRIEF FOR AMICUS CURIAE ABBVIE INC. IN SUPPORT OF PETITIONER

J. MICHAEL JAKES
Counsel of Record
WILLIAM B. RAICH
JASON W. MELVIN
FINNEGAN, HENDERSON, FARABOW, GARRETT & DUNNER, LLP
901 New York Avenue, NW
Washington, DC 20001
(202) 408-4000
mike.jakes@finnegan.com

January 27, 2015

TABLE OF CONTENTS

Page

TABLE OF AUTHORITIES iii

STATEMENT OF INTEREST 1

SUMMARY OF ARGUMENT 1

ARGUMENT 3

I. The pharmaceutical industry depends on patents that may only realistically be enforced against indirect infringers. 3

A. Many beneficial inventions take the form of methods of use of a known compound. 5

B. Enforcing pharmaceutical method-of-use patents against direct infringers would strain public policy. 7

II. The Federal Circuit's "good-faith belief of invalidity" standard improperly unbalances enforcement of patent rights by conflating induced infringement with the more-stringent standard for willful infringement 10

III. The Federal Circuit's "good-faith belief of invalidity" exemption conflicts with the statutory framework and discriminates against pharmaceutical patent owners. 12

A. The Federal Circuit's standard could permit inducing parties to negate liability in the Hatch-Waxman context. 13

B. Marketing of generic treatments, even if ultimately found to infringe, causes irreparable harm to patent owners. 18

CONCLUSION 21

TABLE OF AUTHORITIES

CASES

Abbott Laboratories v. Sandoz, Inc.,
544 F.3d 1341 (Fed. Cir. 2008) 21

Aria Diagnostics, Inc. v. Sequenom, Inc.,
726 F.3d 1296 (Fed. Cir. 2013) 19

Aro Manufacturing Co. v. Convertible Top Replacement Co.,
377 U.S. 476 (1964) (*Aro II*) 8, 10, 11, 12

Bayer HealthCare, LLC v. FDA,
942 F. Supp. 2d 17 (D.D.C. 2013) 20

Celsis In Vitro, Inc. v. CellzDirect, Inc.,
664 F.3d 922 (Fed. Cir. 2012) 20, 21

Dawson Chemical Co. v. Rohm & Haas Co.,
448 U.S. 176 (1980) 11

Eli Lilly & Co. v. Teva Pharmacueticals USA, Inc.,
609 F. Supp. 2d 786 (S.D. Ind. 2009) 20

F.T.C. v. Actavis, Inc.,
133 S. Ct. 2223 (2013) 13

Glaxo, Inc. v. Novopharm, Ltd.,
110 F.3d 1562 (Fed. Cir. 1997) 13

Metro-Goldwyn-Mayer Studios Inc. v. Grokster, Ltd.,
545 U.S. 913 (2005) 8

Par Pharmaceuticals, Inc. v. TWI Pharmaceuticals, Inc.,
No. CCB-11-2466, 2014 WL 3956024
(D. Md. Aug. 12, 2014) 20

Sanofi-Aventis v. Sandoz, Inc.,
405 F. App'x 493 (Fed. Cir. 2010) 16

Sanofi-Synthelabo v. Apotex Inc.,
488 F. Supp. 2d 317 (S.D.N.Y. 2006) 20

Seagate, In re,
497 F.3d 1360 (Fed. Cir. 2007) 11

Wallace v. Holmes,
29 F. Cas. 74 (No. 17100) (CC Conn. 1871) 11

Warner-Lambert Co. v. Apotex Corp.,
316 F.3d 1348 (Fed. Cir. 2003) 8

STATUTES

21 U.S.C. § 355 ..... 14, 15

35 U.S.C. § 271 ..... 4, 8, 10, 14

35 U.S.C. § 284 ..... 10, 11

35 U.S.C. § 287(c) 9

Drug Price Competition and Patent Term Restoration Act of 1984, Pub. L. No. 98-417, 98 Stat. 1585 13

LEGISLATIVE HISTORY

H.R. 3866, 81st Cong., 1st Sess. (1949) 8

H.R. 5988, 80th Cong., 2d Sess. (1948) 8

Statement of Giles Rich, Hearings before Subcommittee No. 3 of House Judiciary Committee on H.R. 3760, 82d Cong., 1st Sess. 9

REGULATIONS

Allergan Patent Notices, *available at* http://www.allergan.com/products/patent_notices.htm 7

Atanu Saha et al., *Generic Competition in the US Pharmaceutical Industry*, 13 Int'l J. Econ. Bus. 15 (2006) 19

C. Scott Hemphill & Mark A. Lemley, *Earning Exclusivity: Generic Drug Incentives and the Hatch-Waxman Act*, 77 Antitrust L.J. 947 (2011) 16

Diane Christine Renbarger, *Putting the Brakes on Drugs: The Impact of* KSR v. Teleflex *on Pharmaceutical Patenting Strategies*, 42 Ga. L. Rev. 905 (2008) 16

FDA, Approved Drug Products, *available at* http://www.accessdata.fda.gov/scripts/cder/ob/ 6, 7, 14

Henry Grabowski, *Are the Economics of Pharmaceutical Research and Development Changing? Productivity, Patents and Political Pressures*, 22 Pharmacoeconomics (Supp. 2) 15 (2004)..... 7, 18

IMS Institute for Health Informatics, *The Use of Medicines in the United States: Review of 2010*, (2011), *available at* http://www.imshealth.com/deployedfiles/imshealth/Global/Content/IMS%20Institute/Static%20File/IHII_UseOfMed_report.pdf 19

John Hudson, *Generic Take-up in the Pharmaceutical Market Following Patent Expiry: A Multi-Country Study*, 20 Int'l Rev. L. & Econ. 205 (2000) 19

Joseph A. DiMasi & Henry G. Grabowski, *The Cost of Biopharmaceutical R&D: Is Biotech Different?* 28 Manage. Decis. Econ. 469 (2007)..... 4

Joseph A. DiMasi, *The price of innovation: new estimates of drug development costs*, 22 J. Health Economics 151 (2003)..... 3, 4

Mark A. Lemley, *Inducing Patent Infringement*, 39 U.C. Davis L. Rev. 225 (2005) 8

Michael A. Carrier, *Payment After Actavis*, 100 Iowa L. Rev. 7 (2014) 15, 16

Tufts Center for the Study of Drug Development, *Cost Study News Release* (Nov. 18, 2014), *available at* http://csdd.tufts.edu/news/complete_story/pr_tufts_csdd_2014_cost_study 4

STATEMENT OF INTEREST

AbbVie Inc. develops innovative pharmaceutical treatments targeting a wide range of debilitating and life-threatening diseases.[1] Patent protection is integral to support AbbVie's investments in research and development, and the issue in this case—liability for those who induce infringement—particularly relates to many of AbbVie's technologies. AbbVie believes that the Federal Circuit's decision in this case incorrectly imposes a significant obstacle to enforcing patents against induced infringement and thus jeopardizes AbbVie's significant investments in its products and patents.

SUMMARY OF ARGUMENT

Some of the most important inventions in modern medicine have come not from the synthesis of new drugs, but rather from the discovery that existing drugs can be used in new and different ways, to treat and cure different diseases than ever envisioned. Indeed, many breakthrough treatments for diseases such as cancer, leprosy, AIDS, and

---

[1] Pursuant to Supreme Court Rule 37.6, AbbVie states that this brief was not authored, in whole or in part, by counsel for a party, and that no monetary contribution to the preparation or submission of this brief was made by any person or entity other than AbbVie or its counsel. Pursuant to Supreme Court Rule 37.3, counsel of record for all parties have consented to this filing.

multiple sclerosis involve the use of "old" drugs for new purposes. The patent laws recognize that these can be important inventions, and allow for method claims in the general form of "The method of treating Disease X using Compound Y." Indeed, many of the most important patents in the pharmaceutical industry are written in this "method of use" format.

But it is impossible, as a practical matter, to enforce such patents by suing for direct infringement. After all, the only people who actually use Compound X to treat Disease Y are doctors and patients. But it would be both impractical and contrary to public policy for pharmaceutical companies to sue thousands of doctors and patients individually. Thus, where a competing drug company instructs doctors or patients to infringe, a patentee's only possible recourse is to sue that company for indirect infringement. As such, the pharmaceutical industry is heavily dependent on a strong and meaningful doctrine of induced infringement. Otherwise, these critical method-of-use patents, which can represent hundreds of millions of dollars in investment, can be effectively meaningless.

The Federal Circuit's *Commil* decision threatens to marginalize the value of these patents. Under that decision, a company may be able to escape liability for infringement even where the patent is found to be valid, and even where the company's instructions unequivocally tell doctors and patients to practice the patented method, based solely on an incorrect belief that the patent was

invalid. That should not and cannot be correct. There is no doubt that the Federal Circuit's *Commil* decision will lead to increased reliance on opinions of counsel. But when a party instructs others to infringe a patent and where that patent is found to be valid, liability should attach. The Federal Circuit's decision should be reversed.

ARGUMENT

I. The pharmaceutical industry depends on patents that may only realistically be enforced against indirect infringers.

As an innovative pharmaceutical company, AbbVie relies on patent protection to help fund research and development of novel treatments in appreciation of patients' needs, including seven products currently in Phase III clinical trials intended to treat hematological and solid tumor cancers, multiple sclerosis, hepatitis C, and complications of diabetes, among others. Industry trends show that over seventy-five percent of pharmaceutical products in clinical trials do not even make it to market, and the expenses associated with those failures have to be compensated for by successful products. Joseph A. DiMasi, *The price of innovation: new estimates of drug development costs*, 22 J. Health Econ. 151, 165 (2003) (statistically analyzing 538 self-originated compounds that were first tested in humans between 1983 and 1994 for which information was available in the Tufts CSDD database and finding a clinical success rate of only 21.5%). Developing a treatment

to the point of marketability can take decades and incur costs in excess of two and a half billion dollars. Tufts Center for the Study of Drug Development, *Cost Study News Release* (Nov. 18, 2014), *available at* http://csdd.tufts.edu/news/complete_story/pr_tufts_csdd_2014_cost_study; *see also* Joseph A. DiMasi & Henry G. Grabowski, *The Cost of Biopharmaceutical R&D: Is Biotech Different?* 28 Manage. Decis. Econ. 469, 477 (2007) (noting a capital cost of $1.2B (year-2005 dollars) per approved new biopharmaceutical); DiMasi, *The price of innovation: new estimates of drug development costs*, at 180 (noting a capital cost of nearly $900M (year-2000 dollars) per approved new drug, including post-approval research).

Patent protection provides a period of market exclusivity for undertaking such substantial investments. Because generic manufacturers simply copy successful pharmaceutical products, the significant risk and costs associated with researching and developing new therapeutics is eliminated. In contrast, companies that assume the risk and make the investment in discovery and development of innovative treatments rely on patent protection to support their investment and enable a return thereon, thereby supporting further investment in innovation. Maintaining its market often requires that a patent owner enforce its rights, and the patent-infringement statute permits a patent owner to enforce against either direct or indirect (contributory or induced) infringement. 35 U.S.C. § 271. Each prohibition addresses a distinct

conduct harming patent holders, thus establishing an overall scope of protection that Congress has deemed appropriate.

Many pharmaceutical patents may only be practically enforced by targeting those who induce infringement, because the patented technology is a method of treatment, rather than the basic compound used in the method. As explained below, because method-of-use patents—and preventing induced infringement of those patents, particularly in the context of the statutory mechanisms unique to the industry—critically affect the pharmaceutical industry, correcting the Federal Circuit's erroneous holding in this case is exceptionally important.

A. Many beneficial inventions take the form of methods of use of a known compound.

Not uncommonly, innovations in disease treatment come from new applications for known compounds. In many such cases, a compound long known for, or thought overly risky in, certain applications may have beneficial, therapeutic uses when used in a new, innovative manner. Method-of-use patents protect those therapeutic uses and provide incentive to invest in the research required to develop them.

As an example, consider thalidomide, which was initially used to treat morning sickness. Tragically, this use of thalidomide led to widespread birth defects and infant fatalities. Subsequent research, however, suggested that thalidomide could

be used to treat leprosy and certain types of cancers, and today, thanks to extensive investment and rigorous clinical trials, thalidomide is an FDA-approved treatment for both multiple myeloma and the cutaneous manifestations of moderate to severe leprosy. Because thalidomide is an "old" compound, absent the exclusivity conferred by method-of-use patents, it is unlikely that innovative pharmaceutical companies would have undertaken the substantial research and development activities to bring these important treatments to market.[2] Indeed, the exclusivity gained through method-of-use patent protection has incentivized the pharmaceutical industry to develop important new uses for many other already known compounds, including, for example, azidothymidine (AZT, treating HIV, although first used decades earlier to treat cancer), botulinum toxin (treating urinary incontinence, muscle-spasm pain, headaches, and other neuromuscular disorders),[3] dimethyl fumarate

---

[2] The FDA Orange Book lists patents applicable to each approved drug product (*see infra* at 21). The listing for thalidomide includes multiple method-of-use patents, including: 8,589,188; 8,315,886; 8,204,763; 7,959,566; 7,874,984; 7,435,745; 7,141,018; 6,908,432; 6,869,399; 6,755,784; 6,561,977; 6,561,976; 6,315,720; 6,045,501; and 5,629,327. *See* Orange Book listings for Application No. 020785, *available at* http://www.accessdata.fda.gov/scripts/cder/ob/docs/obdetail.cfm?Appl_No=020785&TABLE1=OB_Rx.

[3] Multiple method-of-use patents cover methods of using botulinum toxin in medical treatments, including: 6,667,041; 6,683,049; 6,896,886; 6,974,578; 7,001,602; 7,429,387;

(treating multiple sclerosis),[4] and arsenic trioxide (treating leukemia).[5] These are just a few examples of the many instances in which new treatments were developed for old compounds. *See also* Henry Grabowski, *Are the Economics of Pharmaceutical Research and Development Changing? Productivity, Patents and Political Pressures*, 22 Pharmacoeconomics (Supp. 2) 15, 21 (2004) (noting the difficult economic payback for investing in new drugs, and giving an example of an AIDS treatment protected only by method-of-use patents).

B. Enforcing pharmaceutical method-of-use patents against direct infringers would strain public policy.

Health-care providers or patients carrying out the steps of claimed methods of use typically act in

---

7,449,192; 7,968,104; 8,057,807; 8,062,643; and 8,501,195. *See* Allergan Patent Notices, *available at* http://www.allergan.com/products/patent_notices.htm.

[4] The FDA Orange Book lists the following method-of-use patents for dimethyl fumarate: 7,320,999; 7,619,001; 7,803,840; 8,399,514; and 8,524,773. *See* Orange Book listings for Application No. 204063, *available at* http://www.accessdata.fda.gov/scripts/cder/ob/docs/patexclnew.cfm?Appl_No=204063&Product_No=001&table1=OB_Rx.

[5] The FDA Orange Book lists the following method-of-use patents for arsenic trioxide: 6,723,351; 6,855,339; 6,861,076; 6,884,439; and 6,982,096. *See* Orange Book listings for Application No. 021248, *available at* http://www.accessdata.fda.gov/scripts/cder/ob/docs/patexclnew.cfm?Appl_No=021248&Product_No=001&table1=OB_Rxt.

accordance with instructions in the product labeling. *See, e.g.*, *Warner-Lambert Co. v. Apotex Corp.*, 316 F.3d 1348, 1354-55 (Fed. Cir. 2003). Enforcement against the direct infringers would create substantial problems and inefficiencies, eviscerating the value of method-of-use patents.

1. First, it would fail to target the entity economically benefiting from infringement—the generic pharmaceutical company selling a pharmaceutical product with the intention that it be used in an infringing manner. Additionally, it would be inefficient: it would require a piecemeal approach to address infringement, with separate cases having to be brought against each infringing physician or patient, resulting in multiplied transaction costs.

This Court has recognized that, when Congress established the indirect-infringement portions of § 271, it sought to codify the practice of protecting patent rights where enforcing against direct infringers is impractical. *Aro Mfg. Co. v. Convertible Top Replacement Co.*, 377 U.S. 476, 511-12 (1964) (*Aro II*) (citing H.R. 5988, 80th Cong., 2d Sess. (1948); H.R. 3866, 81st Cong., 1st Sess. (1949)); *cf. Metro-Goldwyn-Mayer Studios Inc. v. Grokster, Ltd.*, 545 U.S. 913, 929-30 (2005) (noting that indirect liability in copyright permits enforcement of rights when effectively enforcing against all direct infringers would be impossible); *see* Mark A. Lemley, *Inducing Patent Infringement*, 39 U.C. Davis L. Rev. 225, 228 (2005) (noting the impracticality of enforcing pharmaceutical patents

with direct infringement). Indeed, as Commil points out (Commil Br. 31-33), one of the main drafters of the statute, Giles Rich, reminded a congressional subcommittee that "there may be twenty or thirty percent of all the patents that are granted that cannot practically be enforced against direct infringers because of the nature of the invention and the way it is claimed in the patent." Statement of Giles Rich, Hearings before Subcommittee No. 3 of House Judiciary Committee on H.R. 3760, 82d Cong., 1st Sess., at 160.

2. Beyond the economic factors, public-interest considerations also militate against enforcing against direct infringement in the pharmaceutical context. Medical-technology companies like AbbVie invest in research to benefit patients and, while they do so with an aim of long-term profits, helping patients is a very real inspiration at the foundation of these companies. AbbVie respectfully submits that both physicians and patients should retain the freedom to pursue any approved treatment option without concern for patent-infringement liability. Congress has codified an attenuated version of this desire in 35 U.S.C. § 287(c), which precludes relief against medical practitioners performing medical or surgical procedures on patients.

Enforcing method-of-use patents through induced infringement, in contrast to direct infringement, avoids the piecemeal inefficiencies of multiple litigation actions, targets the party economically benefiting from the infringement, and

maintains patient access to all market options. Induced infringement is, in other words, a mechanism that neatly addresses conditions of the pharmaceutical market.

II. The Federal Circuit's "good-faith belief of invalidity" standard improperly unbalances enforcement of patent rights by conflating induced infringement with the more-stringent standard for willful infringement

As Commil explains, the Federal Circuit's rule does not comport with this Court's precedent, the statutory structure, or other aspects of the law. Commil Br. 15-53. Moreover, as explained below, it also improperly raises the standard for induced infringement to be similar to that for willful infringement.

1. The patent statute defines induced infringement as one avenue Congress provided to enforce against infringement, 35 U.S.C. § 271, and provides a remedy of compensatory damages, 35 U.S.C. § 284. *See Aro II*, 377 U.S. at 512 (stating that "[t]he measure of recovery for patent infringement is governed by 35 U.S.C. § 284," and applying it to contributory infringement); *see also id.* ("Hence we think that after a patentee has collected from or on behalf of a direct infringer damages sufficient to put him in the position he would have occupied had there been no infringement, he cannot thereafter collect actual damages from a person liable only for contributing to the same infringement.").

Indeed, the creation and codification of a remedy for induced infringement simply provided an alternative enforcement mechanism for patent owners to target the most appropriate entity. *See Dawson Chem. Co. v. Rohm & Haas Co.*, 448 U.S. 176, 179-80 (1980) ("The idea that a patentee should be able to obtain relief against those whose acts facilitate infringement by others has been part of our law since *Wallace v. Holmes*, 29 F Cas. 74 (No. 17100) (CC Conn. 1871)."); *Aro II*, 377 U.S. at 511-12 (noting Congress's purpose in passing the indirect-infringement aspects of the current law). Thus, it stands to reason that the substantive requirements to prove inducement might not be expected to rise markedly above other enforcement mechanisms.

2. In addition to the compensatory damages available through any of the alternative forms of enforcement, the law also provides for enhanced damages when the nature of infringement is willful and thus justifies a punitive award. *See Aro II*, 377 U.S. at 508 (noting that "a case of willful or bad-faith infringement" may justify "punitive or 'increased' damages" in addition to "such damages as had actually been suffered from contributory infringement"). The Federal Circuit interprets enhanced damages as requiring proof of willful infringement. *In re Seagate*, 497 F.3d 1360, 1368 (Fed. Cir. 2007). And enhanced damages are significant—they may as much as treble the compensatory award. 35 U.S.C. § 284.

To make the showing required for willful infringement, a patentee must prove both that "the infringer acted despite an objectively high likelihood that its actions constituted infringement of a *valid patent*," and that this risk "was either known or so obvious that it should have been known to the accused infringer." *Seagate*, 497 F.3d at 1371 (emphasis added). The punitive nature of the damages at issue arguably justifies those additional objective and subjective elements of willful infringement as compared to base infringement.

The Federal Circuit majority's "good-faith belief of invalidity" exemption in *Commil*, however, introduces an infringer's belief of invalidity into the basic test for induced infringement. This heightened level of intent was previously reserved for willful infringement. Without the punitive nature of awards for willful infringement, the justification for expanding the liability-eliminating role for invalidity falls away. Indeed, the Federal Circuit's standard leaves little ground between the showing required for induced infringement and that required for willfulness.

III. The Federal Circuit's "good-faith belief of invalidity" exemption conflicts with the statutory framework and discriminates against pharmaceutical patent owners.

As described above (*see supra* at 5-7), innovative medical treatments often take the form of new methods of using known compounds or formulations. The Federal Circuit's rule in this case

hollows the core of enforcement by potentially eliminating infringement liability, at least up to the point of judicial determination of patent validity/infringement, and at the least incentivizing activities likely to cause irreparable harm. Thus, while the Federal Circuit may have crafted its rule with one case in mind, the rule conflicts with the statutory framework for pharmaceutical patents established by Congress and may lead to unintended consequences undermining valid patent rights.

A. The Federal Circuit's standard could permit inducing parties to negate liability in the Hatch-Waxman context.

Patent infringement in the pharmaceutical context often differs from other types of patent infringement as a result of the Drug Price Competition and Patent Term Restoration Act of 1984, Pub. L. No. 98-417, 98 Stat. 1585 (1984) (Hatch-Waxman Act). The point of the framework set up by the Hatch-Waxman Act is to properly incentivize innovator manufacturers to develop new products, while at the same time incentivizing generic manufacturers to challenge patents and seek early entry. *See F.T.C. v. Actavis, Inc.*, 133 S. Ct. 2223, 2228-29 (2013) (noting the incentive to generic manufacturers); *Glaxo, Inc. v. Novopharm, Ltd.*, 110 F.3d 1562, 1568 (Fed. Cir. 1997) (noting the balancing incentives). This act reflects a carefully drawn balancing of incentives.

Under the Hatch-Waxman Act, the FDA publishes approved treatments in a document titled

Approved Drug Products with Therapeutic Equivalence Evaluations, known as the Orange Book. FDA, Approved Drug Products, *available at* http://www.accessdata.fda.gov/scripts/cder/ob/; *see also* 21 U.S.C. § 355(j)(7). The Orange Book entry for an approved drug includes a list of patents that the patent owner has provided as covering the approved treatment—expressly including method-of-use patents. *See* 21 U.S.C. § 355(j)(7)(A)(iii); 21 U.S.C. § 355(b)(1)(G); FDA, Approved Drug Products, Patent and Exclusivity Information Addendum.

When a generic manufacturer wishes to market a treatment equivalent to and relying upon an existing, approved treatment, the manufacturer may proceed with an Abbreviated New Drug Application (ANDA) under 21 U.S.C. § 355(j) (section 505(j) of the Hatch-Waxman Act). Filing an ANDA prior to expiration of the innovator company's Orange Book-listed patents is, by statute, an act of infringement. 35 U.S.C. § 271(e)(2). If the generic manufacturer wishes to sell its product before expiration of patents listed by the innovator company, it must certify that the listed patents are invalid or will not be infringed by the manufacture, use or sale thereof. 21 U.S.C. § 355(j)(2)(A)(vii) (known as a Paragraph IV certification).[6] It must

---

[6] For method-of-use patents listed in the Orange Book, a generic manufacturer may also assert that the listed methods do not include the methods for which the manufacturer will label its product. 21 U.S.C. § 355(j)(2)(A)(viii).

also notify the patent owner of the factual and legal bases underlying the certification of noninfringement or invalidity. 21 U.S.C. § 355(j)(2)(B). The patent owner may then bring a claim for patent infringement, which triggers a thirty-month period during which the FDA will refrain from approving the ANDA, allowing the infringement suit to proceed. 21 U.S.C. § 355(j)(5)(B)(iii).[7]

Thus, under this framework, the patent holder may, and generally does, proceed with a patent suit in the district courts. *See* Michael A. Carrier, *Payment After Actavis*, 100 Iowa L. Rev. 7, 27 (2014) (noting 238 lawsuits from 2003 through 2009 alone). If the suit is complete by the end of the thirty-month stay period, little question remains regarding induced infringement at the time the generic manufacturer can market its treatment. If the generic manufacturer wins (either by proving noninfringement or invalidity), then—absent reversal on appeal—there can be no liability. If, on the other hand, the patent owner wins (the district court finds the patent infringed and not invalid), the generic manufacturer would clearly induce infringement by marketing the product and labeling it with instructions for practicing the claimed steps.

---

[7] The first generic manufacturer to file an ANDA with a Paragraph IV certification is provided with a "180-day exclusivity period," starting when the generic drug is first marketed, during which no other unauthorized generic drugs will be approved. 21 U.S.C. § 355(j)(5)(B)(iv).

However, in some cases, the thirty-month stay ends prior to a final decision by the district court. In such cases, the Federal Circuit's holding in *Commil* could open a door to infringement. When a generic manufacturer markets a treatment prior to a final court decision, it is said to launch the treatment "at risk." *See Sanofi-Aventis v. Sandoz, Inc.*, 405 F. App'x 493, 494 (Fed. Cir. 2010) (describing an at-risk launch as "a launch before a final court decision"). And such at-risk launches are not merely hypothetical, as shown by the *Sanofi-Aventis* case. *See also* Michael A. Carrier, *Payment After Actavis*, 100 Iowa L. Rev. 7, 27 (2014) (noting 28 at-risk launches out of 238 lawsuits involving first-filing Paragraph IV generic manufacturers from 2003 through 2009); Diane Christine Renbarger, *Putting the Brakes on Drugs: The Impact of* KSR v. Teleflex *on Pharmaceutical Patenting Strategies*, 42 Ga. L. Rev. 905, 936 (2008) (noting two such launches in 2006 and eight launches in 2007); C. Scott Hemphill & Mark A. Lemley, *Earning Exclusivity: Generic Drug Incentives and the Hatch-Waxman Act*, 77 Antitrust L.J. 947, 957 (2011) (noting eight at-risk launches out of forty-nine drugs between 2005 and 2009). Importantly, as discussed below, the Federal Circuit's decision in this case would encourage such at-risk launches but reduce the actual risk thereof.

1. During this period of an at-risk launch—before the questions of infringement and validity are resolved by the courts—under the Federal Circuit's new rule, the generic manufacturer may seek to minimize its risk simply by obtaining an opinion of

counsel or proffering other evidence of its good-faith belief of invalidity, such as the detailed statement the generic manufacturer must send to the innovator company explaining the basis for its challenge to the listed patents. Because the patent owner has not yet prevailed in the district court, the generic manufacturer can profess that it does not believe the patent to be valid. Under the Federal Circuit's "good-faith belief of invalidity" rule, an opinion of counsel that the patent is invalid, or potentially even the generic company's Paragraph IV certification and explanation of bases alone, may provide sufficient basis on which an otherwise-inducing party can escape liability. *See* U.S. Br. on Pet. for Cert. 11-12 n.2 (noting that despite the Federal Circuit majority's statement otherwise, operation of the rule seems to necessarily preclude liability).

Thus, the Federal Circuit's rule could permit some generic manufacturers to escape inducement liability for a period of time until their invalidity arguments are rejected by a court, at which point their arguments would cease to support a good-faith belief. This would be an unjust result, particularly as the generic manufacturer would: know of the existence of the patent; know that the instructions it provides in its labeling correspond to the claimed steps of the patented method; and have ultimately failed to prove the patent was invalid.

2. Even if the risk of liability during an at-risk launch remains non-negligible, for example, because the "good-faith belief of invalidity" is only one aspect

of the inducement analysis, the Federal Circuit's rule improperly incentivizes an at-risk launch. Before the Federal Circuit's rule in this case, the potential reward of marketing a royalty-free treatment prior to court judgment already motivated generic manufacturers to launch at risk, as described above. The Federal Circuit's rule provides the added allure of increasing the likelihood of escaping liability for that period completely, even if the patent is directly infringed and valid. Moreover, while damages may still be available in some cases where the patent owner ultimately prevails, as explained in the following section, introduction of a royalty-free copy of a branded drug often causes irreparable harm to the patent owner, counseling against the incentive notwithstanding what damages may be available.

B. Marketing of generic treatments, even if ultimately found to infringe, causes irreparable harm to patent owners.

At-risk launches cause many harms to patent owners. For example, they can have disastrous effects on the market for a patented drug. In the first three months of generic treatments entering the market, a branded treatment can lose 75% of its market share. *See* Henry Grabowski, *Are the Economics of Pharmaceutical Research and Development Changing? Productivity, Patents and Political Pressures*, 22 Pharmacoeconomics (Supp. 2) 15, 19 (2004) (noting that the three largest branded treatments lost more than 75% market share in the

first quarter upon generic entry); *see also* John Hudson, *Generic Take-up in the Pharmaceutical Market Following Patent Expiry: A Multi-Country Study*, 20 Int'l Rev. L. & Econ. 205, 216 (2000) (determining that branded sales decline to 70% of the total after one year of generic entry); Atanu Saha et al., *Generic Competition in the US Pharmaceutical Industry*, 13 Int'l J. Econ. Bus. 15, 29-31 (2006) (observing a shift of 55% of sales volume to generics after one year of entry). A generic equivalent can largely replace sales of the branded compound because of 1) "generic substitution" laws; 2) incentives under which third-party payors drive patients to generic products; and 3) financial incentives that make the dispensing of generic drugs more attractive to pharmacists than dispensing the branded equivalent. *See* IMS Institute for Health Informatics, *The Use of Medicines in the United States: Review of 2010*, at 21-22 (2011), *available at* http://www.imshealth.com/deployedfiles/imshealth/Global/Content/IMS%20Institute/Static%20File/IHII_UseOfMed_report.pdf.

Although loss of revenue might be recoverable through damages, at-risk launches create harm beyond just the direct reduction of revenue for a patent owner. One factor is price erosion: a branded drug cannot maintain its price after a generic has entered the market, even after that generic is no longer on the market. *See Aria Diagnostics, Inc. v. Sequenom, Inc.*, 726 F.3d 1296, 1304 (Fed. Cir. 2013) (reversing district court's finding of no irreparable harm, in part because it assumed that price erosion

and loss of market share were not irreparable); *see also Celsis In Vitro, Inc. v. CellzDirect, Inc.*, 664 F.3d 922, 930 (Fed. Cir. 2012) ("Price erosion, loss of goodwill, damage to reputation, and loss of business opportunities are all valid grounds for finding irreparable harm."). Another factor is reduction in research: pharmaceutical research is often funded by revenue (rather than by debt or equity), so lost revenue from the sale of branded (patented) treatments negatively impacts research. *See, e.g.*, *Eli Lilly & Co. v. Teva Pharm. USA, Inc.*, 609 F. Supp. 2d 786, 811-12 (S.D. Ind. 2009) (finding irreparable harm, in part, because of the "disruption or loss of research as well as a scaling back of investment in research and development" that would result from the generic launch); *Bayer HealthCare, LLC v. FDA*, 942 F. Supp. 2d 17, 25-26 (D.D.C. 2013) (same). In other words, at-risk launches reduce the likelihood a company will seek out innovative uses for existing compounds.

Further, at-risk launches change patient copayments: a generic version of a branded drug may displace the branded drug as a preferred option for insurance companies, leading to higher copayments by patients. *See Sanofi-Synthelabo v. Apotex Inc.*, 488 F. Supp. 2d 317, 342-43 (S.D.N.Y. 2006) (describing the phenomenon as a form of irreversible price erosion and finding irreparable harm); *see also Par Pharm., Inc. v. TWI Pharm., Inc.*, No. CCB-11-2466, 2014 WL 3956024, at *4 (D. Md. Aug. 12, 2014) (finding irreparable harm, in part, due to displacement in formularies). Those copayments in

turn influence goodwill as the most direct aspect of many patients' differentiation between treatment options. Goodwill is also lost because of reduced reimbursement rates caused by market availability of a generic option. *See, e.g.*, *Celsis*, 664 F.3d at 930 ("Price erosion, loss of goodwill, damage to reputation, and loss of business opportunities are all valid grounds for finding irreparable harm."). Finally, at-risk launches can cause other, difficult-to-quantify harm, such as the general shrinking of business operations and loss of jobs by the patent owner. *See generally Abbott Labs. v. Sandoz, Inc.*, 544 F.3d 1341, 1361-62 (Fed. Cir. 2008) (affirming the district court's finding of irreparable harm and citing precedent holding that loss of revenue, market position, goodwill, research and development support, and market opportunities are evidence of irreparable harm).

In light of the multiple ways that at-risk launches can harm patent owners, particularly those harms irreparable though monetary damages, the incentive created by the Federal Circuit's "good-faith belief of invalidity" should be eliminated.

CONCLUSION

For the foregoing reasons, AbbVie respectfully requests that this Court overrule the Federal Circuit's judgment.

Respectfully submitted,

J. MICHAEL JAKES
Counsel of Record
WILLIAM B. RAICH
JASON W. MELVIN
FINNEGAN, HENDERSON,
FARABOW, GARRETT &
DUNNER, LLP
901 New York Avenue, NW
Washington, DC 20001
(202) 408-4000
mike.jakes@finnegan.com

Counsel for Amicus Curiae
AbbVie Inc.

January 27, 2015

AMICUS CURIAE BRIEF

Supreme Court, U.S.
FILED
JAN 27 2015
OFFICE OF THE CLERK

No. 13-896

In the Supreme Court of the United States

COMMIL USA, LLC
Petitioner,

v.

CISCO SYSTEMS, INC.,
Respondent.

ON WRIT OF CERTIORARI TO THE UNITED STATES COURT OF APPEALS FOR THE FEDERAL CIRCUIT

BRIEF OF *AMICUS CURIAE* AMERICAN INTELLECTUAL PROPERTY LAW ASSOCIATION IN SUPPORT OF NEITHER PARTY

LISA K. JORGENSON
Executive Director
AMERICAN INTELLECTUAL PROPERTY LAW ASSOCIATION
241 18th Street South
Suite 700
Arlington, VA 22202
(703) 415-0780

JOHN T. JOHNSON
Counsel of Record
FISH & RICHARDSON P.C.
601 Lexington Avenue
52nd Floor
New York, NY 10022
212-765-5070
jjohnson@fr.com

Attorneys for Amicus Curiae American Intellectual Property Law Association

TABLE OF CONTENTS

STATEMENT OF INTEREST 1

SUMMARY OF ARGUMENT 2

ARGUMENT 3

I. INFRINGEMENT IS A SEPARATE QUESTION TO BE CONSIDERED WITHOUT REGARD TO VALIDITY 3

II. NOTHING IN THE TEXT OF § 271(b) OR ITS LEGISLATIVE HISTORY SUGGESTS THAT AN INVALIDITY BELIEF IS A DEFENSE TO INDUCED INFRINGEMENT 6

III. THE KNOWLEDGE REQUIRED FOR A §271(b) VIOLATION DOES NOT PROVIDE SUPPORT THAT AN INVALIDITY BELIEF IS RELEVANT TO INFRINGEMENT UNDER §271(b) 9

IV. CONSEQUENCES OF OPENING THE DOOR TO "BELIEF OF INVALIDITY" 10

a. The New Federal Circuit Rule Conflates the Mental States Required for Inducement and Willfulness 10

b. The New Federal Circuit Rule Will Erode Patent Enforcement Rights Against Indirect Infringers 11

c. The New Federal Circuit Rule Risks Opening the Door to "Beliefs" of Any Other Defenses to Patent Infringement 12

CONCLUSION 13

TABLE OF AUTHORITIES

Page(s)

Cases

Aro Mfg. Co. v. Convertible Top Replacement Co., 365 U.S. 336 (1961) *4*

Aro Mfg. Co. v. Convertible Top Replacement Co., 377 U.S. 476 (1964) 7, 10

Cardinal Chem. Co. v. Morton Int'l, Inc., 508 U.S. 83 (1993) 4

Commil USA, LLC v. Cisco Sys., Inc., 720 F.3d 1361 (Fed. Cir. 2013) 3, 6, 8

Envtl. Designs, Ltd. v. Union Oil Co. of Cal., 713 F.2d 693 (Fed. Cir. 1983) 12

Global-Tech Appliances, Inc. v. SEB S.A., 131 S. Ct. 2060 (2011) 7, 9, 10

Limelight Networks, Inc. v. Akamai Techns., Inc., 134 S. Ct. 2111 (2014) 4

Medtronic, Inc. v. Cardiac Pacemakers, Inc., 721 F.2d 1563 (Fed. Cir. 1983) 6

Pandrol USA, LP v. Airboss Ry. Prods., Inc., 320 F.3d 1354 (Fed. Cir. 2003) 5

In re Seagate Tech., LLC, 497 F. 3d 1360 (Fed. Cir. 2007) 10

Stratoflex, Inc. v. Aeroquip Corp., 713 F.2d 1530 (Fed. Cir. 1983) 5, 6

Statutes

35 U.S.C. § 271(b) ..... *passim*

35 U.S.C. § 271(c) ..... *passim*

35 U.S.C. § 282 12

35 U.S.C. § 284 10

Other Authorities

H.R. Rep. No. 82-1923, at 9 (1952) 7

Supreme Court Rule 37.3(a) 2

Supreme Court Rule 37.6 1

STATEMENT OF INTEREST

The American Intellectual Property Law Association ("AIPLA") is a national bar association of approximately 15,000 members engaged in private and corporate practice, in government service, and in the academic community.[1] AIPLA members represent a wide and diverse spectrum of individuals, companies, and institutions involved directly and indirectly in the practice of patent, trademark, copyright, and unfair competition law, as well as other fields of law affecting intellectual property. The Association's mission includes providing courts with objective analysis to promote an intellectual property system that stimulates and rewards invention while balancing the public's interest in healthy competition, reasonable costs, and basic fairness.

The Association has no stake in the parties to this litigation or in the result of this case, other than its

---

[1] In accordance with Supreme Court Rule 37.6, amicus curiae states that this brief was not authored, in whole or in part, by counsel to a party, and that no monetary contribution to the preparation or submission of this brief was made by any person or entity other than the amicus curiae and its counsel. Specifically, after reasonable investigation, AIPLA believes that (i) no member of its Board or Amicus Committee who voted to file this brief, or any attorney in the law firm or corporation of such a member, represents a party to this litigation in this matter, (ii) no representative of any party to this litigation participated in the authorship of this brief, and (iii) no one other than AIPLA, or its members who authored this brief and their law firms or employers, made a monetary contribution to the preparation or submission of this brief.

interest in the correct and consistent interpretation of law affecting intellectual property.[2]

SUMMARY OF ARGUMENT

A defendant's belief of invalidity should not be a defense to induced infringement under Section 271(b). While invalidity is a defense to liability for infringement, the concepts of infringement and validity are separate and distinct.

The Federal Circuit's new defense to induced infringement is also inconsistent with the Patent Act's text and structure, will result in unexpected consequences with respect to the law of infringement, and will erode Section 271(b)'s effectiveness. The Federal Circuit based its decision on the false premise that infringement can only occur with respect to a valid patent, failing to recognize that it is ***liability*** for infringement that depends on patent validity. The distinction between infringement and validity is well recognized in precedent of this Court and the Federal Circuit, and it remains essential to the fair and consistent application of the law.

There is no basis in either the statute or the legislative history for importing a belief about patent validity into determining a violation of Section 271(b), despite the knowledge requirement which this Court found in the phrase "actively induces." In addition, such importation would effectively conflate the ultimate issues of inducement and willfulness.

---

[2] In accordance with Supreme Court Rule 37.3(a), the parties have consented to the filing of this amicus brief in support of neither party.

Finally, the introduction of this problematic new defense to inducement promises to significantly undermine the ability of patent owners to enforce their rights against indirect infringers, which is sometimes their only realistic mechanism for enforcement against infringing competitors. In an age of increasingly sophisticated technology, distributed over global networks of interacting systems and participants, the ability of patent owners to obtain relief over uses of their inventions has become ever more difficult. To condition these enforcement efforts on the subjective belief of defendants is to hobble an enforcement mechanism provided by Congress at a time when it is more important than ever.

ARGUMENT

I. INFRINGEMENT IS A SEPARATE QUESTION TO BE CONSIDERED WITHOUT REGARD TO VALIDITY

Section 271(b) says nothing about an invalidity belief, instead stating only that "Whoever actively induces infringement of a patent shall be liable as an infringer." The Federal Circuit, in reaching its holding that a good-faith belief of invalidity may negate an induced infringement claim, relied mainly on the asserted "principle" that "[i]t is axiomatic that one cannot infringe an invalid patent." *Commil USA, LLC v. Cisco Sys., Inc.*, 720 F.3d 1361, 1368 (Fed. Cir. 2013). But this statement confuses the question of infringement with the question of liability for infringement. The proper way to look at this is that there can be no liability for infringement if the patent is invalid. The statement also conflicts with longstanding judicial authority that infringement and validity are distinct issues.

The distinction between infringement and liability for infringement is illustrated by this Court's recent decision in *Limelight Networks, Inc. v. Akamai Techns., Inc.*, 134 S. Ct. 2111 (2014). In that case, the Court held that a defendant could not be liable for inducing infringement where no one has committed direct infringement because "inducement liability may arise 'if, but only if, [there is] ... direct infringement.'" *Akamai*, 134 S. Ct. at 2117 (quoting *Aro Mfg. Co. v. Convertible Top Replacement Co.*, 365 U.S. 336, 341 (1961)). The Court addressed why its result was not counter to tort law principles that impose liability on a defendant who harms another through a third party, even if that third party would not himself be liable. The Court explained that the reason the defendant could not have induced infringement under § 271(b) "is not that no third party is *liable* for direct infringement; the problem, instead, is that no direct infringement was *committed*." *Akamai*, 134 S. Ct. at 2118-2119 (emphasis in original). Thus, the Court recognized that being liable for infringement and committing infringement are distinct.

Infringement entails the step of determining if the accused product or acts correspond to the scope of the invention as defined by that properly construed claim. And that determination does not require any determination of validity. Of course, liability for infringement entails determining the application of defenses such as invalidity, and if a court accepts the defense that the patent claim is invalid, there is no ultimate liability for the demonstrated infringement.

The distinction between infringement and invalidity has long been recognized in precedent of both this Court and of the Federal Circuit. It was an important part of the decision in *Cardinal Chem. Co. v.*

Morton Int'l, Inc., 508 U.S. 83 (1993), which objected to the Federal Circuit's view that a finding of non-infringement obviated any need to address a counterclaim of invalidity. That case reviewed the Federal Circuit's routine practice of vacating a declaratory judgment of invalidity whenever non-infringement is found. In addressing that procedural issue, the Court implicitly acknowledged that infringement and invalidity are separate questions requiring independent consideration.

This distinction between infringement and validity also has been recognized repeatedly by the Federal Circuit, as in the following:

> [T]his court has long recognized that patent infringement and invalidity are separate and distinct issues. "Though an invalid claim cannot give rise to liability for infringement, whether it is infringed is an entirely separate question capable of determination without regard to its validity."

Pandrol USA, LP v. Airboss Ry. Prods., Inc., 320 F.3d 1354, 1365 (Fed. Cir. 2003) (quoting *Medtronic, Inc. v. Cardiac Pacemakers, Inc.*, 721 F.2d 1563, 1583 (Fed. Cir. 1983)); *Stratoflex, Inc. v. Aeroquip Corp.*, 713 F.2d 1530, 1540-1541 (Fed. Cir. 1983).[3]

---

[3] In *Stratoflex*, the Federal Circuit highlighted the distinction between infringement and invalidity: "When presented with patent validity and infringement issues, trial courts should, as Judge Boyle did here, decide both. First, the parties, witnesses and exhibits involved in both issues are before the court. If a judgment limited to one issue is reversed, it may become necessary to again call many of the same persons before the court for trial or argument on the other." 713 F.2d at 1540-1541.

In practice, patent jury trials provide a good illustration of the importance of distinguishing between infringement and invalidity. Juries in patent cases are often faced with the dual task of deciding infringement and validity issues, and verdict forms typically separate those distinct determinations. Where a jury finds a patent is infringed but also finds it invalid, the verdict on infringement stands separate from the verdict on invalidity. Should the trial court uphold the jury's verdict following trial, the result is that the invalidity of the patent precludes any liability for the defendant's infringement. *Id.* at 1540-1541.

The rule applied in *Commil*, however, directly contradicts the distinction recognized by this Court and earlier Federal Circuit decisions. While a determination of invalidity may dispose of liability, the infringement of a claim is a "separate question" that can be determined "without regard to its validity" and the "better practice" is to address each issue separately. *Medtronic*, 721 F.2d at 1583. As such, in response to a charge of patent infringement, a defendant may rely on a number of defenses, such as patent invalidity or unenforceability, to contest liability. This is clearly established in our law.

II. NOTHING IN THE TEXT OF § 271(b) OR ITS LEGISLATIVE HISTORY SUGGESTS THAT AN INVALIDITY BELIEF IS A DEFENSE TO INDUCED INFRINGEMENT

The language of Section 271(b) and the legislative history of the statute further support the conclusion that a good faith belief of invalidity is not relevant to the issue of infringement. The Federal Circuit's holding to the contrary has no basis in either the language or the legislative history of the statute.

In enacting Section 271(b), Congress sought to define broadly induced infringement in this one simple sentence:

> Whoever actively induces infringement of a patent shall be liable as an infringer.

This recitation for induced infringement reflected the intent of Congress to declare "in broad terms that one who aids and abets an infringement is likewise an infringer." H.R. Rep. No. 82-1923, at 9 (1952).

Indirect infringement has long been part of our patent laws, but the 1952 Patent Act took pains to codify this part of the law after Congress found it far too confused to be useful. *See Aro Mfg. Co. v. Convertible Top Replacement Co.*, 377 U.S. 476, 485 n.6 (1964) (*Aro II*) (noting that Section 271 was intended to codify principles that had been part of the common law for the preceding 80 years) (citing H.R. Rep. No. 82-1923, at 9 (1952), and 1952 U.S.C.C.A.N. 2402 (statement of Rep. Rogers)). Congress did so by creating one provision for contributory infringement at Section 271(c), and a separate provision for induced infringement at Section 271(b). In neither provision did Congress include any reference to a defendant's belief about the validity of the asserted patent. While Section 271(c) has express language about knowledge of infringement, and this Court in *Global-Tech* found a knowledge requirement implied in the "actively induces" language of Section 271(b), the required knowledge for the two provisions does not have anything to do with patent validity. *See Global-Tech Appliances, Inc. v. SEB S.A.*, 131 S. Ct. 2060 (2011).

Nor is there any suggestion in the legislative history of the 1952 Patent Act that a patent owner's assertion of induced infringement may be refuted by a defendant's belief that the patent is invalid. Instead Congress sought to broadly define induced infringement, as noted above.

This Court, in deciding the issue presented, should consider the overall purpose of the 1952 Patent Act, which codified the existing common law of patents, including those principles of indirect infringement (such as contributory infringement). There is no support in the statute's text itself, nor in the legislative history of the 1952 Act, nor in the pre-1952 case law, that suggests that one's belief as to invalidity (whether accurate or not) affects a claim of induced infringement.

If the Federal Circuit's rule in *Commil* stands, an inherent unfairness will result where an inducer successfully defends against a §271(b) inducement charge based on its belief of invalidity, and that invalidity belief turns out to be incorrect. If, in such a case, it is later determined that the patent is not invalid, then the inducer will have avoided liability based entirely on its subjective belief, despite the incorrectness of that belief. Certainly Congress did not intend to protect inducers who incorrectly believe that an asserted patent is invalid. Section 271(b) says nothing about an invalidity belief, instead stating only that, "Whoever actively induces infringement of a patent shall be liable as an infringer." An invalidity belief is not an element of induced infringement.

III. THE KNOWLEDGE REQUIRED FOR A §271(b) VIOLATION DOES NOT PROVIDE SUPPORT THAT AN INVALIDITY BELIEF IS RELEVANT TO INFRINGEMENT UNDER §271(b)

Section 271(b) has been found to include a showing of knowledge of the patent by the alleged inducer, but such knowledge has nothing to do with the validity of the patent.

In *Global-Tech* this Court considered the requirements for showing inducement of patent infringement under Section 271(b). *Global-Tech* reviewed generally the law of indirect patent infringement in its pre-1952 uncodified state and in its post-1952 codified state. 131 S. Ct. at 2065-2068. Upon finding an implied knowledge requirement in the Section 271(b) phrase, "actively induces," the Court concluded that knowledge could also be imputed based on the defendant's willful blindness. *Id.* at 2069.

The *Global-Tech* decision reviewed the analysis in *Aro II* on the knowledge requirement for contributory infringement under Section 271(c), and inferred the same knowledge requirement of Section 271(b) from its analysis of Section 271(c). Regardless of what is necessary to satisfy the knowledge requirement of Sections 271(b) and (c), which is not directly at issue here, nothing in *Aro II* or *Global-Tech* requires or suggests that a belief about patent invalidity is relevant to determining induced infringement.

IV. CONSEQUENCES OF OPENING THE DOOR TO "BELIEF OF INVALIDITY"

a. The New Federal Circuit Rule Conflates the Mental States Required for Inducement and Willfulness

To permit a defendant's belief about patent invalidity to negate evidence of inducement conflates well-established patent law principles of willfulness and induced infringement.

Section 271(b) requires, under *Global-Tech*, that "at least some intent is required," 131 S. Ct. at 2065, and Section 284 provides increased damages where the defendant's culpability is aggravated by willful acts. Although Section 284 does not expressly include a mental state requirement, this Court has explained that increased damages are only available "in a case of willful or bad-faith infringement." *Aro II, 377 U.S.* at 508.

Introducing a defendant's invalidity belief into a determination of Section 271(b) induced infringement will inevitably conflate the mental state determinations required for willful infringement and induced infringement. Federal Circuit willfulness rules require clear and convincing evidence that the infringer acted despite an objectively high likelihood that its actions were infringing, and that this objectively-defined risk was either known or so obvious that it should have been known to the accused infringer. *In re Seagate Tech., LLC*, 497 F. 3d 1360, 1371 (Fed. Cir. 2007). If a belief of invalidity, which can be a defense to willfulness, is also treated as a defense to inducement (regardless of the correctness of the belief), the

Federal Circuit's decision in this case creates confusion between the standards for inducement and for willfulness.

b. The New Federal Circuit Rule Will Erode Patent Enforcement Rights Against Indirect Infringers

By allowing a "belief of patent invalidity" to be asserted as a defense to a charge of inducing patent infringement, the Federal Circuit will limit the ability of patent owners to enforce their rights against indirect infringers.

Congress provided—with Sections 271(b) and (c)—enforcement rights against indirect infringers in order to protect patent owners from those who stay at arm's length from actually practicing the claimed invention themselves, but who benefit from the infringing activity that they encourage and assist others to carry out. In an age of increasingly sophisticated technology, distributed over global networks of interacting systems and participants, the ability of patent owners to obtain relief over uses of their inventions has become ever more difficult. For some technologies, patent enforcement against indirect infringement today is more important than ever. In particular, the pharmaceutical industry often relies on method claims to protect its innovations, which are enforceable principally against "users" of the method rather than manufacturers of a device. As another example, the telecommunication industry often relies on system claims for protecting innovative technologies, which at times can only be enforced against indirect infringers.

In addition, patent owners may face a situation in which the entity being induced to commit direct infringement is its own actual or potential customer. Under such circumstances, an inducement claim may be the only viable claim since a patent owner will not be inclined to sue its own customer.

Another consideration that weighs against giving effect to a "belief of invalidity" is the statutory presumption of validity that patents enjoy under 35 U.S.C. § 282. As explained by the late Chief Judge Markey, this presumption is reflected in that a court will not find a patent valid, but will instead find it was not proved "invalid" based on the record before the court. *Envtl. Designs, Ltd. v. Union Oil Co. of Cal.*, 713 F.2d 693, 699 n.9 (Fed. Cir. 1983). He noted that this "avoids concern that a patent held valid may be held invalid on a different record in another case." *Id.*

c. The New Federal Circuit Rule Risks Opening the Door to "Beliefs" of Any Other Defenses to Patent Infringement

The Federal Circuit's new rule allowing a "belief of patent invalidity" to be asserted as a defense to a charge of inducing patent infringement failed to distinguish the invalidity defense from any other infringement defense. *See* 35 U.S.C. § 282. As a result, inducement claims are now exposed to the belief of a defendant about any of the defenses that would be part of an infringement action, such as unenforceability. As such, a defendant's "belief of unenforceability" (even if it is incorrect) of a patent can preclude liability for induced infringement.

CONCLUSION

In view of the foregoing, AIPLA respectfully submits that a defendant's belief of invalidity should not be a defense to induced infringement under Section 271(b).

Respectfully submitted.

LISA K. JORGENSON
Executive Director
AMERICAN INTELLECTUAL
PROPERTY LAW ASSOCIATION
241 18th Street South
Suite 700
Arlington, VA 22202
(703) 415-0780

JOHN T. JOHNSON
Counsel of Record
FISH & RICHARDSON P.C.
601 Lexington Avenue
52nd Floor
New York, NY 10022
(212) 765-5070
jjohnson@fr.com

AMICUS CURIAE BRIEF

No. 13-896

Supreme Court, U.S.
FILED
FEB 26 2015
OFFICE OF THE CLERK

IN THE

Supreme Court of the United States

COMMIL USA, LLC,

Petitioner,

—v.—

CISCO SYSTEMS, INC.,

Respondent.

ON WRIT OF CERTIORARI TO THE UNITED STATES COURT OF APPEALS FOR THE FEDERAL CIRCUIT

BRIEF OF *AMICUS CURIAE* ASKELADDEN L.L.C. IN SUPPORT OF RESPONDENT

KEVIN J. CULLIGAN
Counsel of Record
JOHN P. HANISH
JONATHAN A. AUERBACH
GOODWIN PROCTER LLP
The New York Times Building
620 Eighth Avenue
New York, New York 10018
kculligan@goodwinprocter.com
(212) 813-8800

Attorneys for Amicus Curiae Askeladden L.L.C.

TABLE OF CONTENTS

PAGE

Table of Authorities iii

INTEREST OF *AMICUS CURIAE* 1

SUMMARY OF ARGUMENT 5

ARGUMENT 8

I. Commil's argument contravenes this Court's holding in *Global-Tech* and improperly calls for a notice letter standard for the intent required for induced infringement under 35 U.S.C. § 271(b) 8

II. Allowing evidence of a good-faith belief in invalidity and non-infringement to negate induced infringement promotes patent quality and helps to level the playing field in actions asserting weak patents 14

A. An accused infringer's good-faith belief of non-infringement is often coupled with a good-faith belief in invalidity 14

B. Financial services institutions would be harmed if this Court adopts Commil's notice letter standard for the intent required for induced infringement under 35 U.S.C. § 271(b) 16

PAGE

C. Commil's and amici's predictions about the negative effects of the Federal Circuit's opinion in *Commil* are unfounded 21

CONCLUSION 26

TABLE OF AUTHORITIES

Cases: PAGE(S)

Automated Transaction LLC v. New York Cmty. Bank, No. 12-cv-3070-JS-ARL, 2013 U.S. Dist. LEXIS 34872 (E.D.N.Y. Mar. 13, 2013) 18

Bose Corp. v. SDI Techs., Inc., 558 F. App'x 1012 (Fed. Cir. 2014) 23

Commil USA, LLC v. Cisco Sys., Inc., 720 F.3d 1361 (Fed. Cir. 2013) 8, 9, 21, 24

Ecolab, Inc. v. FMC Corp., 569 F.3d 1335, *amended on reh'g in part*, 366 F. App'x 154 (Fed. Cir. 2009)..... 15

Global-Tech Appliances, Inc. v. SEB S.A., 131 S. Ct. 2060 (2011) ..... *passim*

In re Innovatio IP Ventures, LLC, Patent Litigation, No. 1:11-cv-9308, D.I. 431 (N.D. Ill. Oct. 1, 2012) 25

Intellectual Ventures I LLC v. Bank of America Corp., No. 3:13-cv-358-RJC-DSC, 2014 U.S. Dist. LEXIS 28132 (W.D.N.C. Mar. 5, 2014)..... 18

Kinetic Concepts, Inc. v. Blue Sky Med. Grp., Inc., 554 F.3d 1010 (Fed. Cir. 2009)..... 15

Maxim Integrated Prods., Inc. v. Bank of America Corp., No. 4:12-cv-617-RAS, D.I. 1 (E.D. Tex. Filed Oct. 1, 2012) 18, 19

PAGE(S)

Renaissance Learning, Inc. v. Walker Digital, LLC, No. 3:11-cv-166-BBC, D.I. 1-1 (W.D. Wis. Mar. 4, 2011) 17

VirnetX, Inc. v. Cisco Sys., Inc., 767 F.3d 1308 (Fed. Cir. 2014)..... 24

Wolf Run Hollow, LLC v. Bank of America Corp., No. 13-cv-8406, D.I. 1 (N.D. Ill. Nov. 21, 2013) 17

Statutes:

35 U.S.C. § 271(b) .....*passim*

35 U.S.C. § 298 13

Other Authorities:

Executive Office of the President, *Patent Assertion and U.S. Innovation* (June 2013), http://www.whitehouse.gov/sites/default/files/docs/patent_report.pdf 14

FTC, *Prepared Statement of the Federal Trade Commission on Discussion Draft of Patent Demand Letter Legislation Before the Subcommittee on Commerce, Manufacturing, and Trade*, 2 (May 22, 2014), *available at* http://www.ftc.gov/system/files/documents/public_statements/310821/140522patentdemandltrs.pdf ... 13

PAGE(S)

John Mullin, *Wi-Fi Patent Troll Hit with Racketeering Suit Emerges Unscathed*, Ars Technica (Feb. 13, 2013, 10:05 AM), http://arstechnica.com/tech-policy/2013/02/wi-fi-patent-troll-hit-with-novel-anti-racketeering-charges-emerges-unscathed 25

John R. Allison, et al., *Patent Quality and Settlement Among Repeat Patent Litigants*, 99 Geo. L.J. 677 (2011) 12

Josh Lerner, *The Litigation of Financial Innovations*, 53 J. L. & Econ. 807 (2010) 21

Nelson D. Schwartz & Louise Story, *Surge of Computer Selling After Apparent Glitch Sends Stocks Plunging*, N.Y. Times, May 6, 2010, *available at* http://www.nytimes.com/2010/05/07/business/economy/07trade.html 20

Thomas S. Kim & Michael D. Stein, *Patent Value: Increased Interest Extends Beyond "Trolls,"* Legal Intelligencer, May 23, 2005 4

USPTO, *I Got a Letter* . , http://www.uspto.gov/patents-maintaining-patent/patent-litigation/i-got-letter 13

INTEREST OF *AMICUS CURIAE*

Askeladden L.L.C. is an education, information and advocacy organization dedicated to improving the understanding, use, reliability and quality of patents pertinent to financial services and related industries.[1] Askeladden seeks to improve the U.S. patent system by, among other things, submitting amicus curiae briefs on important legal issues.

Askeladden is a wholly owned subsidiary of The Clearing House Payments Company L.L.C. Established in 1853, The Clearing House is the oldest banking association and payments company in the United States. It is owned by the world's largest commercial banks, which collectively hold more than half of all deposits in the United States and employ more than one million people in the United States and more than two million people worldwide. The Clearing House clears almost $2 trillion each day, representing nearly half of all automated clearing house, funds transfer and check-image payments made in the United States. Its affiliate, The Clearing House Association L.L.C., is a nonpartisan advocacy organization that represents the interests of its owner banks by promoting and developing policies to support a safe, sound and competitive banking system.

---

[1] Pursuant to Supreme Court Rule 37.6, Askeladden affirms that no counsel for a party authored this amicus brief in whole or in part, no counsel or party made a monetary contribution intended to fund the preparation or submission of this brief, and no person other than Askeladden or its counsel made such a monetary contribution. Askeladden sought and obtained consent to the filing of this amicus brief from both of the parties.

Askeladden recognizes that a strong patent system is vital to continued innovation in the United States, and many member banks hold patents of their own relating to financial products and services. Askeladden and members of The Clearing House also recognize, however, that widespread attempts to exploit weak patents by some patent holders contravene the spirit, if not the letter, of the patent laws, and constitute an abuse of our patent system and our courts.

This Court should reject Commil's argument that the standard for determining the intent required to prove liability for inducing patent infringement should be changed so that a good-faith belief that an asserted patent is invalid would no longer be a defense to a claim that a party has induced others to infringe. Such a change would be antithetical to the role that patents play in promoting innovation. Although valid patent rights promote innovation, invalid patents stifle innovation and competition. The Federal Circuit's observation in this case that a good-faith belief that an asserted patent is invalid is a defense to a charge of inducing patent infringement is consistent with and serves the twin goals of promoting respect among parties for the patent rights of competitors, while preventing invalid patents that do not promote innovation (because they are not novel or relate to unpatentable subject matter) from smothering the legitimate activities of other participants in the marketplace, including financial services institutions.

The change demanded by Commil would further burden financial services institutions and the courts with specious claims of patent infringement brought by legions of holders of low-quality

patents whose principal business is to buy or otherwise acquire dubious patents for the sole purpose of asserting them in dozens and sometimes hundreds of abusive notice and demand letters and infringement actions against companies that use a product or business method that is somehow related, however tenuously or remotely. Those abusive patent holders then settle their claims by granting fully paid-up non-exclusive licenses for nuisance amounts to avoid a determination of invalidity or non-infringement.[2] If a target of a demand letter does not agree to license the patent, the patent holder ordinarily commences an action alleging patent infringement, hoping to quickly extract a settlement from

---

[2] A large and growing number of the patent holders that harm the patent and judicial systems and undermine incentives to innovate by engaging in abusive licensing campaigns carried out by distributing indiscriminate generic demand letters and asserting weak and invalid patents to extract settlement payments fall within the scope of the term "non-practicing entities" or "NPEs" The patent holders that abuse patents and whose conduct is the concern of this amicus brief should not be confused with universities or other public and private research foundations and institutions that do not commercialize their inventions, but conduct, or have others conduct on their behalf, legitimate licensing programs. Some operating companies also abuse the patent and court systems through the indiscriminate assertion of weak patents to extract settlements from accused infringers that for practical reasons decide to settle rather than incur the costs, distractions and risks associated with expensive litigation. Askeladden's focus here is on the abusive behavior—whether it is the assertion of an invalid patent, the overbroad application of the claims of a patent for purposes of claiming infringement and then settling for nuisance amounts to avoid challenges of such specious theories, or engaging in abusive demand or notice letter campaigns—rather than the particular status of the patent holder.

the accused infringer by offering the possibility of a settlement priced in a way that seems attractive given the high costs and risks associated with patent litigation. Some abusive patent holders forgo notice letters and simply file an infringement action to extract settlement payments. *See* Thomas S. Kim & Michael D. Stein, *Patent Value: Increased Interest Extends Beyond "Trolls,"* Legal Intelligencer, May 23, 2005 (describing entities that extract profits by offering a target entity an option of purchasing a license or facing litigation).

If Commil persuades this Court to remove the scienter required for a finding of inducing infringement under 35 U.S.C. § 271(b), there will be a greater incentive for abusive patent holders to assert questionable claims of induced infringement against members of the financial services industry. Those companies are particularly vulnerable targets for inducement claims because they necessarily are involved and engage in extensive relationships and transactions among banks, brokerage firms, customers, depositories, data processors, market-data vendors, exchanges and clearing entities. If financial services institutions are unable to avoid liability for inducing infringement by offering evidence of a good-faith belief in invalidity, they will become even more vulnerable to abusive patent holders asserting questionable patents in an attempt to extract quick settlements from parties that understandably want to avoid the very substantial costs that must be incurred to defend against even a single patent infringement action. Any person with a financial interest in the global economy—in other words, everyone—shares in the wasteful costs associated with abusive demand letter

campaigns and specious patent infringement actions.

Askeladden's interest is to ensure that participants in the financial services industry continue to have the fair opportunity to defend themselves against questionable claims of inducing patent infringement that current law allows. That fair opportunity includes the ability to present evidence of a good-faith belief in the invalidity of the asserted patent or their own non-infringement as proof that they did not act with "knowledge that the induced acts constitute patent infringement." *Global-Tech Appliances, Inc. v. SEB S.A.*, 131 S. Ct. 2060, 2068 (2011).

SUMMARY OF ARGUMENT

Commil asks this Court to hold that a party accused of inducing infringement should be prohibited from introducing evidence of its good-faith belief in the invalidity of an asserted patent to negate the element of intent required to establish inducement of infringement under 35 U.S.C. § 271(b). Commil's attempt to fashion a new standard—one that would find scienter whenever the alleged infringer fails to accede to the demands in a mere notice letter—runs squarely into this Court's holding in *Global-Tech* that "induced infringement under § 271(b) requires knowledge that the induced acts constitute patent infringement." *See Global-Tech*, 131 S. Ct. at 2068. Commil further overreaches by arguing for the first time in its brief that a party accused of inducing infringement also should be prohibited from introducing evidence of its good-faith belief that the accused induced acts do not infringe the

asserted patent to negate a finding of induced infringement. Commil did not present that second question in its petition, and its argument should be rejected not only because it would constitute a substantial and unfounded change in the patent law, but also on the separate ground that it is improper to raise a new issue for the first time in its brief on the merits.

A decision by this Court in favor of Commil would have deleterious consequences for the financial services industry. The financial services industry is highly dependent on technical innovation and has been marked by the rapid application of technological advances in connection with its provision of products and services. The financial services industry has seen monumental growth in the past 50 years, in part due to those technological advances, which allow transactions to be processed reliably and rapidly. Today, nearly half of all United States households invest in the markets and nearly three-quarters of all households use online banking or bill-paying services. Patent quality, the issuance and enforcement of valid patents and the invalidation of improperly-issued patents is as important to the financial services industry as it is to any other business endeavor.

The financial services industry is particularly vulnerable for practical economic reasons to assertions of patent infringement fabricated by abusive patent holders alleging induced infringement of weak patents. Because financial markets operate across borders, an actual or threatened disruption of any part of the financial services industry as a consequence of a patent dispute in

the United States can have global implications. If the patent dispute involving induced infringement is based on anything less than purposeful conduct by members of the industry, the cost to society of potential disruption cannot be justified. Preventing banks and other financial services entities from proving their good-faith belief that asserted patents are invalid (or that the allegedly induced acts do not infringe) to negate the intent required for inducing infringement would further incentivize some abusive patent holders to continue and even escalate the harassment of members of the financial services industry.

Parties that own or control patents already enjoy a significant advantage in patent infringement disputes because patents are presumed by law to be valid. Commil's proposed standard for the intent requirement of 35 U.S.C. § 271(b)—mere knowledge of the patent and its "potential applicability" to the defendant's activities—would typically be satisfied by simple "notice letters" that many abusive patent holders commonly dump indiscriminately on large numbers of accused infringers. Commil's "notice letter standard" would unfairly tilt the playing field further in favor of such patent holders. Alleged infringers in the financial services sector would be deprived of an important defense and therefore be more likely to enter into settlement agreements that require a nuisance payment for a license under a weak patent simply to avoid a greater cost of defending the claim for infringement and the small, but often unacceptable risk of a catastrophic disruption to their services that would result from an injunction or an award of damages. This Court should not change the law on which financial services

companies have placed justified and important reliance.

ARGUMENT

I. Commil's argument contravenes this Court's holding in *Global-Tech* and improperly calls for a notice letter standard for the intent required for induced infringement under 35 U.S.C. § 271(b).

1. The Federal Circuit held "that evidence of an accused inducer's good-faith belief of invalidity may negate the requisite intent for induced infringement." *Commil USA, LLC v. Cisco Sys., Inc.*, 720 F.3d 1361, 1368-69 (Fed. Cir. 2013). Commil urges this Court to overturn that holding and adopt a new standard for the intent required to establish induced infringement that would merely require the alleged infringer to have "knowledge of the patent and knowledge of the patent's potential applicability to the defendant's activities." Commil Br. at 21. This Court should affirm because the Federal Circuit's holding is consistent with this Court's holding in *Global-Tech* that "induced infringement under § 271(b) requires knowledge that the induced acts constitute patent infringement." 131 S. Ct. at 2068. The Federal Circuit correctly explained that "one could be aware of a patent and induce another to perform the steps of the patent claim, but have a good-faith belief that the patent is not valid. Under those circumstances, it can hardly be said that the alleged inducer intended to induce infringement. Thus, a good-faith belief of invalidity is evidence that may negate the specific intent to

encourage another's infringement, which is required for induced infringement." *Commil USA, LLC*, 720 F.3d at 1368. The Federal Circuit reasoned that its holding followed and was consistent with the holding and reasoning of *Global-Tech* because "evidence [of a good-faith belief of invalidity] should be considered by the fact-finder in determining whether an accused party knew 'that the induced acts constituted patent infringement.'" *Id.* at 1368-69 (citing *Global-Tech*, 131 S. Ct. at 2068). That reasoning also is consonant with common sense because it is not possible to infringe an invalid patent claim. *Id.* at 1368 ("It is axiomatic that one cannot infringe an invalid patent.").

Commil, unable to distinguish the Federal Circuit's holding from the holding and reasoning in *Global-Tech*, instead asserts that the Court's holding in *Global-Tech* was not a holding, and that "knowledge that the induced acts constitute patent infringement" is not required to satisfy the scienter requirement of Section 271(b). If Commil persuades the Court to ignore *Global-Tech* and remove the scienter currently required under Section 271(b) to prohibit all good-faith belief (invalidity *and* non-infringement) defenses, abusive patent holders will be further emboldened to threaten financial services institutions and companies in other industries with specious lawsuits based on spurious allegations of induced infringement. The result would cost those companies very large amounts of money and would add to the strain that increased infringement litigation based on the assertion of weak patents already has placed on the nation's courts. This Court explicitly held in *Global-Tech* that "induced

infringement under § 271(b) requires knowledge that the induced acts constitute patent infringement." 131 S. Ct. at 2068. Commil now twists those words to fashion a new standard for scienter under Section 271(b), a standard that is satisfied if the accused infringer simply is aware of a patent and the patent's "potential applicability" to its conduct. That is not what *Global-Tech* held and that is not what Section 271(b) requires. There is no support in law or reason for Commil's argument that "knowledge of the patent and knowledge of the patent's potential applicability to the defendant's activity [is] sufficient to satisfy the intent requirement" under *Global-Tech*. Commil Br. at 21. *Global-Tech* requires not just notice of the "potential applicability" of a patent, but proof that a party knows that the "induced acts constitute patent infringement." *Global-Tech*, 131 S. Ct. at 2068. A standard that can be satisfied with a boilerplate notice letter is no standard or constraint at all.

Commil's proposed new standard would require only that an accused infringer receive from the patent holder a notice letter that identifies the asserted patent and contains a vague allegation of infringement and nothing more. There is no meaningful distinction between an accused infringer having knowledge of a patent's "potential applicability" or "potential relevance" and an accused infringer receiving a notice letter from the patentee that suggests a patent is potentially relevant to the accused party's activities. Commil does not argue otherwise. Commil Br. at 14 ("[*Global-Tech* and the cases upon which it relied] show that for indirect infringement, the patentee must only prove that

the defendant knew of the patent, knew of the patent's potential applicability to its conduct (*e.g.*, through a notice letter), and intended that their customers engage in the activity at issue.").

Receipt of a notice letter from a patent owner should not, by itself, be sufficient to satisfy the scienter requirement of 35 U.S.C. § 271(b). Providing notice of the "potential applicability" of a patent is not the same thing as establishing that a party knows that the "induced acts constitute patent infringement." *Global-Tech*, 131 S. Ct. at 2068. Abusive patent holders that assert weak patents routinely blanket large numbers of targets with generic letters asserting induced infringement that obviously are not tailored to the specific acts allegedly induced by the party accused of indirect infringement. It cannot fairly be argued that those generic letters impart knowledge to the accused indirect infringer that the specific acts it may induce constitute infringement of the asserted patent or patents.[3] That is especially true when patent holders stretch the meaning of a patent claim so broadly (to assert infringement against dozens or hundreds of parties) that they cannot help but also sweep the prior art within the scope of the claim, thereby rendering it invalid.

If Commil's proposed standard is adopted, an accused infringer that receives a vague, generic

---

[3] If Commil has its way, a patent holder could send a notice letter in bad faith that would be sufficient to impart to the accused infringer "knowledge" sufficient to support a finding of the intent required under Section 271(b) for induced infringement, while the party that receives that bad faith letter would be prohibited from offering evidence of its own good-faith belief that it is not inducing infringement or that the asserted patent is invalid.

notice letter would be unable to defend itself against a claim of inducing infringement by negating intent under Section 271(b), and would be faced with what amounts to a Hobson's choice: pay the price of peace or change its successful product or method or engage in costly and often protracted litigation.

2. The government's position that Section 271(b) should be construed to "require only knowledge of the patent [and] knowledge that the patentee views the induced acts as infringing", U.S. Br. at 17, also ignores this Court's express holding in *Global-Tech*, a case in which the government chose not to participate. The government's argument should be rejected for the additional reason that it effectively eliminates any scienter requirement under Section 271(b)—if a patent holder sends a demand letter to an accused infringer, the patent holder necessarily views the acts allegedly induced by the accused infringer to be infringing a valid patent. Under the government's view, patent holders could obviate a defense of a good-faith belief of non-infringement and a defense of a good-faith belief that the asserted patent is invalid simply by continuing to send the same vague, generic notice and demand letters that they now send to dozens or hundreds of accused infringers. The government's view is especially troubling in light of the poor results abusive patent owners obtain when their weak patents are litigated to a determination on the merits. John R. Allison, et al., *Patent Quality and Settlement Among Repeat Patent Litigants*, 99 Geo. L.J. 677, 694 (2011) (finding a win rate of 8% for parties that engage in abusive patent litigation compared to 40% for other entities).

Contrary to the government's argument, removing the scienter requirement for induced infringement is inconsistent with the provisions of 35 U.S.C. § 298. Section 298 provides that "the failure of an infringer to obtain the advice of counsel with respect to any allegedly infringed patent, or the failure of the infringer to present such advice to the court or jury, may not be used to prove that the accused infringer willfully infringed the patent or that the infringer intended to induce infringement of the patent." Section 298 does not bar a party accused of inducing infringement from presenting evidence that it *did* obtain advice of counsel to prove that it did not intend to induce infringement.

It is very surprising that the government asks this Court to roll back the protection for accused infringers to nothing more than a notice letter standard, when the government *itself* has been warning about the harmful effects associated with the proliferation of demand letters sent by abusive patent holders. The Solicitor General's client, the Patent and Trademark Office; his boss, the President; and the Federal Trade Commission all have issued such warnings in recent years. FTC, *Prepared Statement of the Federal Trade Commission on Discussion Draft of Patent Demand Letter Legislation Before the Subcommittee on Commerce, Manufacturing, and Trade*, 2 (May 22, 2014), *available at* http://www.ftc.gov/system/files/documents/public_statements/310821/140522patentdemandltrs.pdf.; USPTO, *I Got a Letter . . .*, http://www.uspto.gov/patents-maintaining-patent/patent-litigation/i-got-letter (last visited Feb. 25, 2015); Executive Office of the President, *Patent Assertion and U.S.*

Innovation (June 2013), http://www.whitehouse.gov/sites/default/files/docs/patent_report.pdf. The government's repeated warnings are correct and its newly proposed standard accordingly should be rejected.

II. Allowing evidence of a good-faith belief in invalidity and non-infringement to negate induced infringement promotes patent quality and helps to level the playing field in actions asserting weak patents.

A. An accused infringer's good-faith belief of non-infringement often is coupled with a good-faith belief in invalidity.

When a financial services institution receives a notice or demand letter from a patent holder that alleges induced infringement, it often appears that if the claims of the asserted patent are construed narrowly in accordance with relevant evidence, then they do not cover the accused products or conduct, and that if the claims are given their broadest possible construction, then they are invalid in view of the prior art. The accused infringer accordingly has a good-faith belief that the asserted patent claims are either not infringed or invalid, but cannot be certain which of those outcomes will be reached by a court when it construes the asserted claims of the patent-in-suit. Commil's argument that a party accused of inducing infringement should be precluded from offering evidence of a good-faith belief in invalidity would unfairly prevent the accused infringer from offering a good-faith belief in invalidity as a defense in the event that the claim later is construed broadly and held to cover

the accused product or conduct. Such a result would contravene Federal Circuit precedent recognizing that good-faith beliefs in non-infringement and invalidity together establish that there was no intent to infringe a valid claim, and can be shown to negate intent to induce infringement. *Kinetic Concepts, Inc. v. Blue Sky Med. Grp., Inc.*, 554 F.3d 1010, 1024-1025 (Fed. Cir. 2009) ("Richard Weston testified that he thought that because the [accused product] simply performed the [prior art] method, which was in the public domain, KCI's patents could pose no barrier to Blue Sky entering the market. KCI may be correct that 'practicing the prior art' is not a defense to patent infringement. However, it does not follow that a defendant's belief that it can freely practice inventions found in the public domain cannot support a jury's finding that the intent required for induced infringement was lacking." (citation omitted)); *Ecolab, Inc. v. FMC Corp.*, 569 F.3d 1335, 1351, *amended on reh'g in part*, 366 F App'x 154 (Fed. Cir. 2009) ("Dr. Cords's testimony also supports the conclusion that Ecolab personnel reasonably believed that the '676 patent did not cover [the accused product] because [the accused product] contains the same combination of antimicrobial agents disclosed in the prior art Oakes patent.").

If this Court adopts Commil's argument that evidence of a good-faith belief in invalidity should not be available as a defense to a charge of inducing infringement even though a good-faith belief in non-infringement is available as a defense, it would stand existing precedent on its head and limit and weaken the ability of financial services institutions to defend against the constant

barrage of infringement claims asserted by patent holders wielding weak patents and vague, non-specific allegations of induced infringement.

B. Financial services institutions would be harmed if this Court adopts Commil's notice letter standard for the intent required for induced infringement under 35 U.S.C. § 271(b).

The problems raised by Commil's proposed new "notice letter" standard would affect a wide range of businesses and companies, not just high-tech companies like Cisco. A decision by this Court in favor of Commil would significantly harm the financial services industry, which depends on technological innovation and rapid commercialization of technological advances, and has a substantial interest in promoting patent quality because the patent system, when performing properly, promotes technological innovation. Commil's attempt to remove or restrict an important defense to induced infringement of weak patents would frustrate the financial services industry's objective of improving patent quality.

The defenses of good-faith beliefs in invalidity and non-infringement are of practical importance to multiple business sectors. Although the high-tech sector is troubled by assertions of induced infringement of weak patents and the pharmaceutical and biotechnology industries are not immune to such suits, the financial services industry is particularly vulnerable. Holders of weak patents frequently blanket dozens and sometimes hundreds of companies in the financial services industry with form notice letters, often

attaching a generic infringement chart in an attempt to demonstrate that the products or conduct of the particular accused infringer induces infringement by others. Often, the letters and claim charts are exactly the same for each recipient—only the name of the recipient has been changed.[4] *Renaissance Learning, Inc. v. Walker Digital, LLC*, No. 3:11-cv-166-BBC, D.I. 1 1 (W.D. Wis. Mar. 4, 2011) (demand letter from IP Navigation Group stating that "[a]n analysis of [Renaissance's] products shows that your company makes, uses, or sells products or services that would benefit from a license to certain of our client's patents" without identifying the patent or client).

If Commil persuades this Court to adopt its proposed notice letter standard for scienter under Section 271(b) with respect to induced infringement, the already brazen and abusive notice letter practices of many patent holders will be further encouraged to the detriment of financial services institutions and other businesses at significant cost. That harm is not illusory—inducement claims serve as powerful tools to extract settlement payments because financial services

[4] The phenomenon of boilerplate allegations of infringement by abusive patent holders extends even to the preparation of pleadings. One patent holder failed to fully revise its form complaint and filed a complaint in the Northern District of Illinois alleging that jurisdiction and venue were proper in the Central District of California. *See* Compl. at ¶¶ 5-7, *Wolf Run Hollow, LLC v. Bank of America Corp.*, No. 13-cv-8406, D.I. 1 (N.D. Ill. Nov. 21, 2013). That same patent holder had previously filed 31 actions for alleged infringement of the same patent against 111 defendants in courts across the country, but had not actually litigated a single action.

institutions have millions of customers that collectively complete millions of transactions, and a royalty demand of even very small amounts per transaction provides the patent holder with an opportunity to assert a claim for damages, that if awarded, would have a substantial impact on the financial services business.[5]

A recent case is instructive about the potential harm that financial services institutions will face if the level of intent required to induce infringement is reduced to Commil's proposed notice letter standard. In 2012, Maxim Integrated Products, Inc. sent generic notice letters to many targets and subsequently sued a host of financial services institutions asserting induced infringement of numerous patents that it claimed covered mobile phone banking applications. *See, e.g.*, Compl. at ¶¶ 23-24, *Maxim Integrated Prods., Inc. v. Bank of America Corp.*, No. 4:12-cv-617-RAS, D.I. 1

---

[5] Financial services institutions occasionally successfully challenge claims of induced infringement that are inadequately pled. *Intellectual Ventures I LLC v. Bank of America Corp.*, No. 3:13-cv-358-RJC-DSC, 2014 U.S. Dist. LEXIS 28132, at *7 (W.D.N.C. Mar. 5, 2014) ("To survive a motion to dismiss for an induced infringement claim, Plaintiffs' complaint should have alleged facts that plausibly demonstrated that Defendant not only intended their customers to infringe the asserted patent, but also knew that the customers' acts constituted infringement. Instead, Plaintiffs merely argued that Defendants advertised the accused products on its website. This argument fails to mention any facts that demonstrate that Defendants specifically intended for their customers to infringe the asserted patent."); *Automated Transaction LLC v. New York Cmty. Bank*, No. 12-cv-3070-JS-ARL, 2013 U.S. Dist. LEXIS 34872, at *15-16 (E.D.N.Y. Mar. 13, 2013) (dismissing an induced infringement claim as insufficient under Rule 8).

(E.D. Tex. Oct. 1, 2012).[6] One such claim was directed to a system that included a series of different modules capable of performing secure data transfers between each module. Maxim argued that one of the modules should be construed to be a mobile phone. *See id.* at D.I. 1-1 (U.S. Patent No. 5,940,510), claim 1 ("a first portable module[,] . a portable module reader that can be placed in communication with said first portable module[,] . . a secure microcontroller based module in electronic communication with said portable module reader, . . . said combination of said portable module reader and said secure microcontroller performing secure data transfers with said first portable module."). The entities accused of directly infringing the claimed system were the customers of the financial services institutions, not the financial services institutions themselves. To prevail on its claims of induced infringement, Maxim had to prove that the financial services institutions induced their customers to infringe. The accused financial services institutions faced enormous risks litigating the case on the merits because Maxim's claims implicated millions of financial transactions and huge sums of potential alleged damages. Depriving the financial services institu-

[6] Maxim is an operating company and the patents at issue in the *Maxim* case originated in connection with the development of a product called the "iButton," a small steel fob that contained basic internal circuitry designed to store and transfer data, such as digital money for a train fare. For its allegations of infringement, Maxim expanded the claim scope of those patents to cover banking and shopping applications on mobile telephones and other handheld devices, even though those accused products do not in any way compete with the iButton.

tions of a defense to Maxim's claims of induced infringement based on their good-faith beliefs about the invalidity of Maxim's patents simply because Maxim sent generic notice letters to a host of financial services targets would encourage entities like Maxim to continue sending generic notice letters to large numbers of targets. If Commil prevails, abusive patent holders will be further encouraged to extract settlements based on assertions of induced infringement that are vague at best, and the financial services institutions will be further pressured to pay the price of peace demanded by unscrupulous patent holders rather than shoulder the cost and expense of costly, uncertain litigation and risk the prospect of paying enormous and crippling damages.

The global financial services industry relies on its business methods to handle an extraordinary volume of transactions quickly, reliably and cost-effectively. When there is a disruption in the financial system, the effect is instantaneous, deleterious and potentially profound. The impact of a technological disruption was dramatically displayed in May 2010 when a computer error caused the markets to drop precipitously in a very short period. Nelson D. Schwartz & Louise Story, *Surge of Computer Selling After Apparent Glitch Sends Stocks Plunging*, N.Y. Times, May 6, 2010, *available at* http://www.nytimes.com/2010/05/07/business/economy/07trade.html. The havoc that the threat of an injunction based on a questionable theory of patent liability could wreak on the financial markets is not difficult to imagine. The financial services industry asks only that it be equitably and properly enabled to defend itself against claims of inducing infringement by

allowing accused inducers to present evidence to prove their good-faith belief in the non-infringement and invalidity of an asserted patent.[7]

C. Commil's and amici's predictions about the negative effects of the Federal Circuit's opinion in *Commil* are unfounded.

1. Commil and amici construct a long list of potential unintended consequences of the Federal Circuit's holding. Those fears are not warranted, however, because a recent Federal Circuit opinion demonstrates that defendants cannot negate a showing of scienter just by showing that they asked a lawyer to review the asserted patents.

In its amicus brief, the Biotechnology Industry Organization ("BIO") argues that "[t]he Federal

---

[7] Financial services institutions are especially attractive targets for vague allegations of infringement by owners of weak patents because they provide products and services to millions of customers, which thus implicates millions of potential transactions in a damages calculation base if a patent can be broadly read on those transactions. A recent study by Professor Lerner at Harvard University, published in The University of Chicago's Journal of Law & Economics, found that due to infringement actions filed by patent assertion entities, patents directed to financial services are 27-39 times more likely to be asserted in litigation than patents generally. Josh Lerner, *The Litigation of Financial Innovations*, 53 J. L. & Econ. 807, 808 (2010). The rate of litigation of patents directed to financial services is more than an order of magnitude higher than that of patents directed to pharmaceuticals, which have the second highest rate of litigation per patent. *Id.* The rate of litigation for patents directed to financial services also was far greater than the rate for patents directed to biotechnology, which was an emerging industry in the same period that patents for financial services became prevalent. *Id.*

Circuit's rule . . . creates a perverse incentive for accused infringers to obtain exculpatory opinions of counsel or develop other forms of exculpatory evidence that might be used later to show a good-faith belief of invalidity." BIO Br. at 16. BIO's assertion that such an incentive is perverse is inconsistent with the policy of encouraging competitors to respect the patent rights of others – contrary to BIO's assertion, it is a good thing to encourage companies to seek advice of counsel with respect to patents about which they are provided notice. It is entirely sensible for a financial services institution to seek advice of counsel about the validity of a patent identified in a notice or demand letter for several reasons. The products at issue are often vital to the competitive functioning of the organization, such as the financial services institution's website or mobile telephone applications. The accused financial services institution of course needs to understand the threat posed by a patent holder to the financial institution's business, and whether the financial institution could be liable for millions of dollars in damages. Because financial services institutions receive many notice and demand letters from patent holders, and especially as a consequence of the very broad scope that patent holders often ascribe to the claims of the patents they assert, it often is not feasible or practical to conduct a wholesale investigation into the question whether a financial institution's products and conduct actually infringe all of the numerous claims of the multiple patents asserted by ubiquitous abusive patent holders because such an analysis is a disruptive and very labor-intensive endeavor that diverts resources from day-to-day

business activities. As a first step in reacting to the receipt of many demand letters, it makes practical sense to seek advice of counsel about the validity of the patents in question, which is far less disruptive and requires far less investigation into the inner workings of the financial institution's products and methods. If advice of counsel suggests that the asserted patents should be held invalid, the financial institution could choose to respond to the demand letter by pointing out that the patent is likely to be held invalid, which might encourage the patent holder to lower the price of its demanded license or withdraw its assertion of infringement. Good-faith reliance on the advice of counsel in any event could be advanced by the accused infringer as a defense if the patent holder presses its claims and actually litigates the case on the merits.

The Federal Circuit's recent non-precedential opinion in *Bose Corp. v. SDI Techs., Inc.* undercuts Commil's argument that being allowed to offer evidence of a good-faith belief in invalidity would weaken patent rights. In *Bose*, the Federal Circuit found that simply obtaining a competent opinion of counsel was not enough to establish a good-faith belief in invalidity sufficient to rebut an intent to induce infringement. It ruled that an accused infringer also needs to show that it "exercised reasonable and good-faith adherence to the analysis and advice therein." 558 F. App'x 1012, 1024 (Fed. Cir. 2014) (quoting *Central Soya Co., Inc. v. Geo. A. Hormel & Co.*, 723 F.2d 1573, 1577 (Fed. Cir. 1983) (internal quotations omitted)). The Federal Circuit explained that "such a party must prove good-faith reliance on the opinion of counsel" because "[u]pon receipt of an opinion, it is

possible that a party may choose to ignore the opinion, or disagree with it, or be indifferent to it, among a wide range of reactions to having the opinion in hand." *Id.* The Federal Circuit concluded that "although SDI is credited with the receipt of an invalidity opinion of counsel the competence of which is not challenged, unquestionable proof of good-faith reliance is necessary to support a summary judgment of no indirect infringement." *Id.* Contrary to the suggestion of Commil's amici, a party cannot immunize itself against a charge of inducing infringement simply by obtaining a competent opinion of counsel.[8]

2. Commil predicts that if the Federal Circuit's decision is affirmed, patent holders will have no choice other than to bring infringement actions against downstream customers because they will

---

[8] In another post-*Commil* opinion, the Federal Circuit held that, notwithstanding its decision in *Commil*, it was not an abuse of discretion for a trial court to exclude evidence of the initiation of a re-examination of the asserted patents offered in support of a defense predicated on a good-faith belief in invalidity. *VirnetX, Inc. v. Cisco Sys., Inc.*, 767 F.3d 1308, 1324-25 (Fed. Cir. 2014) ("[I]n this case we need not decide whether our opinion in *Commil* justifies reliance on reexamination evidence to establish a good faith belief of invalidity. Instead, we conclude that, regardless of the evidence's relevance to a fact at issue at trial, the district court would still not have abused its discretion in finding that the probative value was substantially outweighed by the risk of unfair prejudice to the patentee, confusion with invalidity (on the merits), or misleading the jury, thereby justifying exclusion under Federal Rule of Evidence 403."). Commil's assertion that under the Federal Circuit's holding accused infringers need only file petitions for post-grant review to avoid liability for induced infringement should be discounted accordingly.

no longer be able to obtain relief by way of induced infringement claims against product manufacturers. Commil Br. at 42-43. According to Commil, providing a remedy for indirect infringement in Sections 271(b) and (c) "allows patent owners to seek their remedy from the real party in interest rather than dragging a large number of customers who simply use the defendant's products into patent litigation." Commil Br. at 34. Commil ignores, however, that patent holders have been suing such customers in droves before the Federal Circuit's opinion in this case, and fails to account for its acknowledgement of such an action in its brief. Commil Br. at 33; Am. Compl., *In re Innovatio IP Ventures, LLC, Patent Litigation*, No. 1:11-cv-9308, D.I. 431 (N.D. Ill. Oct. 1, 2012).[9] Commil should not pretend that its appeal is about protecting downstream customers from patent litigation because those customers were already and still will be the target of patent holders like Commil without regard to the Court's ruling in this case.

---

[9] Innovatio's strategy was to sue hundreds of small technology end-users for four- or five-figure settlement amounts based on their use of WiFi. *See* John Mullin, *Wi-Fi Patent Troll Hit with Racketeering Suit Emerges Unscathed*, Ars Technica (Feb. 13, 2013, 10:05 AM), http://arstechnica.com/tech-policy/2013/02/wi-fi-patent-troll-hit-with-novel-anti-racketeering-charges-emerges-unscathed (noting that Innovatio has sued hundreds of businesses and has reportedly sent more than 8000 letters demanding license fees generally in the range of $2,300-$5,000, instead of challenging a WiFi router manufacturer like Cisco).

CONCLUSION

The judgment of the court of appeals should be affirmed.

Respectfully submitted,

KEVIN J. CULLIGAN
Counsel of Record
JOHN P. HANISH
JONATHAN A. AUERBACH
GOODWIN PROCTER LLP
The New York Times Building
620 Eighth Avenue
New York, New York 10018
kculligan@goodwinprocter.com
(212) 813-8800

Attorneys for Amicus Curiae Askeladden L.L.C.

February 26, 2015

AMICUS CURIAE BRIEF

Supreme Court, U.S.
FILED
JAN 27 2015
OFFICE OF THE CLERK

No. 13-896

IN THE
Supreme Court of the United States

COMMIL USA, LLC,

Petitioner,

v.

CISCO SYSTEMS, INC,

Respondent.

On Writ of Certiorari to the United States Court of Appeals for the Federal Circuit

BRIEF OF BIOTECHNOLOGY INDUSTRY ORGANIZATION AS *AMICUS CURIAE* IN SUPPORT OF PETITIONER

MARK P. WALTERS
Counsel of Record
LAWRENCE D. GRAHAM
GARY M. MYLES, PH.D
JOHN A. MORGAN
LOWE GRAHAM JONES LLP
701 5th Ave, Suite 4800
Seattle, WA 98104
206-381-3300
walters@lowegrahamjones.com
Counsel for *Amicus Curiae*

January 27, 2015

QUESTION PRESENTED

Whether the Federal Circuit erred in holding that a defendant's belief that a patent is invalid is a defense to induced infringement under 35 U.S.C. § 271(b).

TABLE OF CONTENTS

INTEREST OF AMICUS CURIAE 1

SUMMARY OF THE ARGUMENT 3

ARGUMENT 5

I. The Federal Circuit's Rule is Inconsistent with the Text, Structure, and Purpose of the Patent Act 5

A. 35 U.S.C. § 271(b) Defines Inducement in terms of Direct Infringement 5

B. The Federal Circuit's Rule is An End-Run Around the Heightened Burden of Proof for an Invalidity Defense 12

II. The Federal Circuit's Rule Undermines the Statutory Framework for Pharmaceutical Litigation 18

III. Inducement is an Important Strategy for Patent Enforcement in the Life-Sciences Industry 20

IV. The Federal Circuit's Rule Encourages Inefficient and (in Many Cases) Unfair Suits against End Users 24

CONCLUSION 26

TABLE OF AUTHORITIES

CASES

Adamson v. Gilliland 13

Alice Corp v. CLS Bank Int'l 15

Bard Peripheral Vascular, Inc. v. W.L. Gore & Assocs., Inc. 11

Bose *Corp. v. SDI Techs., Inc.* 17

Brown v. Guild 13

Burroughs Wellcome Co. v. Barr Labs. 20

Cantrell v. Wallick 13

Caraco Pharm. Labs., Ltd. v. *Novo Nordisk A/S* 18

Coffin v. Ogden 13

Commil USA, LLC v. Cisco Sys., Inc. 14

Deering v. Winona Harvester Works 13

DSU Med. Corp. v. JMS Co., Ltd. 6, 7, 8

Ecolab, Inc. v. FMC Corp. 6

Eibel Process Co. v. Minnesota & Ontario Paper Co. 13

Forest Laboratories Inc. v. Ivax Pharma 9

FTC v. Actavis 19

Global-Tech Appliances, Inc. v. SEB S.A. 3, 6, 8, 17

In re Bill of Lading Transmission & Processing Sys. Patent Litig. 6

In re Seagate Tech 11

Knorr-Bremse Systeme Fuer Nutzfahrzeuge GmbH v. Dana Corp. 17

KSR Int'l Co. v. Telflex Inc 15

Limelight Networks, Inc. v. Akamai Techs., Inc. 8

Mayo Collaborative Services v. Prometheus Laboratories, Inc. 15

Microsoft Corp. v. i4i Ltd. P'ship 13

Mumm v. Jacob E. Decker & Sons 13

Prima Tek II, L.L.C. v. Polypap 10

Richdel, Inc. v. Sunspool Corp. 10

Smith v. Hall 13

Spectra-Physics, Inc. v. Coherent, Inc. 10

Ultratec, Inc. v. Sorenson Communs., Inc. 15

Underwater Devices, Inc. v. Morrison-Knudsen Co. 17

Wallace v. Holmes 24

Zenith Lab., Inc. v. Bristol-Myers Squibb Co. 23

STATUTES

21 U.S.C. § 355(j)(2)(A)(vii)(IV) 9

35 U.S.C. 271(a) 8

35 U.S.C. § 271(b) ..... *passim*

35 U.S.C. § 271(e)(2)(A) 18

35 U.S.C. § 282(b)(1) 13

35 U.S.C. § 304 16

35 U.S.C. § 314(a) 16

35 U.S.C. § 282(b)(2) 4

OTHER AUTHORITIES

Brian O'Reilly and Nora E. Field, *The Inside Story of the AIDS Drug* 22

Chisum on Patents § 17.04 25

Contributory Infringement in Patents–Definition of Invention: Hearings on H.R. 5988 before the Subcomm. on Patents,

Trademarks, & Copyrights of the H. Comm. on the Judiciary 26

Dmitry Karshtedt, *Damages for Indirect Patent Infringement* 24

Eitan Alexander Ogen, *Assembling a Theory of Infringement: Third Party Liability Based on In-Vivo Production of Patented Pharmaceuticals* 3

Erik P. Harmon, *Promoting the Progress of Personalized Medicine: Redefining Infringement Liability for Divided Performance of Patented Methods* 23

Mark Yarchoan, *The History of Zidovudine (AZT): Partnership and Conflict* 20, 22

Michael Edward McCabe, Jr. and Lindsay J. Kile, *Recent Developments in Patent Law and Their Impact on the Pharmaceutical and Biotechnology Industries* 22

Philip J. Hilts, *AIDS Drug's Maker Cuts Price by 20%* 22

Statement of Giles Rich, Hearings before Subcommittee No. 3 of House Judiciary Committee on H.R. 3760, 82d Cong., 1st Sess. 26

UNITED STATES PATENT AND TRADEMARK OFFICE, AIA PROGRESS 16

INTEREST OF AMICUS CURIAE

The Biotechnology Industry Organization (BIO) is a trade association representing over 1,100 companies, academic institutions, and biotechnology centers.[1] BIO members are involved in the research and development of biotechnological healthcare, agricultural, environmental, and industrial products. In the healthcare sector alone, the biotechnology industry has more than 370 therapeutic products currently in clinical trials being studied to treat more than 200 diseases. The vast majority of BIO members are small companies that have yet to bring a product to market and attain profitability.

BIO has a great interest in this case because its members must rely heavily on the patent system to protect their platform technologies, their commercial embodiments, and to grow their businesses in the decades to come. Enforceable patents that cannot be easily circumvented, and that can be predictably enforced against infringers, enable biotechnology companies to secure the financial support needed to advance biotechnology products through regulatory approval to the marketplace, and to engage in the partnering and technology transfer that is necessary

---

[1] Pursuant to Supreme Court Rule 37.6, the amicus affirms that no counsel for a party authored this brief in whole or in part, no counsel or party made a monetary contribution intended to fund the preparation or submission of this brief, and no person other than the amicus or its counsel made such a monetary contribution. The parties have consented to the filing of this amicus brief.

to translate basic life science discoveries into real-world solutions for disease, pollution, and hunger.

Patents protecting proprietary treatments, uses for drug products, novel mechanisms of action, and biotechnological processes, count among a biotechnology company's most valuable business assets. Oftentimes these patents are not directly infringed by a competitor. For example, the steps of a patented method of treatment or the creation of a patented biologic compound may only exist through the conduct of an end user—a patient, a doctor, a laboratory, a veterinarian, or a consumer. Accordingly, indirect theories of infringement like inducement under 35 U.S.C. § 271(b) are important to protect investment in biotechnology.

BIO members have a strong interest in clear, ascertainable rules for inducement—rules that discourage parties from circumventing infringement liability by obtaining exculpatory "opinions of counsel" in order to support a good-faith belief of invalidity, allowing those who knowingly induce another's direct infringement from escaping any liability, even where the invalidity defense is found lacking in merit.

Given the high failure rate of candidate biotechnology and pharmaceutical products and the massive investment required to identify, develop, obtain regulatory approval for and bring to market new treatments, the right to exclusivity conferred by patents is a critical component of the health sciences economic framework. *See, e.g.*, Eitan Alexander

Ogen, *Assembling a Theory of Infringement: Third Party Liability Based on In-Vivo Production of Patented Pharmaceuticals*, 17 CARDOZO L. REV. 117 (1995). The ability to enforce a patent against the appropriate party is therefore crucial to the functioning of this system. *See id.* at 124-125.

Accordingly, BIO submits this brief to assist this Court's longstanding efforts to guide the evolution of patent law in a tempered, predictable way that will accommodate new emerging technologies to the benefit of all and guard against unforeseen consequences that might cripple reasonable, investment-backed business expectations in the life sciences.

SUMMARY OF THE ARGUMENT

The Federal Circuit's rule that a good-faith belief of invalidity may serve to negate Section 271(b)'s scienter requirement is inconsistent with the text of the statute which defines inducement in terms of direct infringement. This Court held in *Global-Tech Appliances, Inc. v. SEB S.A.*, 131 S.Ct. 2060, 2065 (2011) that Section 271(b) requires not only proof of direct infringement, but also that the inducer had "knowledge of the existence of the patent that is infringed." Willful blindness as to the existence of the patent could satisfy that requirement. *Id.* at 2068-2070. There is no support in *Global-Tech* for a rule that a good-faith belief of invalidity can provide a defense to inducement.

The defenses of invalidity and non-infringement are treated separately by the Patent Act. The

Federal Circuit inappropriately conflated these defenses as equally relevant to an accused inducer's state of mind. In other words, one who believes that he is *not* inducing patent-infringing conduct is put on the same footing as one who *knows* he is inducing such conduct but believes the patent to be invalid.

Additionally, an invalidity defense under 35 U.S.C. § 282(b)(2) must overcome a presumption of validity and requires proof by "clear and convincing evidence." The Federal Circuit's rule is an end-run around both. It merely requires that a belief be held in subjective good-faith, not that the invalidity defense have any merit. No presumption and no heightened standard of proof operates against an accused inducer seeking to establish a good faith belief in invalidity.

One undesirable result of the Federal Circuit's "good-faith belief of invalidity" rule is that it has led to the perverse and unjust situation where the accused inducer actually benefits from having pre-infringement knowledge of the patent because in such cases, he is able to develop exculpatory evidence of invalidity, such as an opinion of counsel.

The practical result of the Federal Circuit's rule is that it weakens the value of patents in biotechnology. Indirect theories of infringements like inducement under Section 271(b) are important. Patents held by biotechnology companies include methods for administering medicines and treating disease, for enhancing agricultural productivity, even for washing laundry. Such methods depend on the activity of an end user for direct infringement, i.e.,

patients, physicians, retailers, or consumers. The Federal Circuit's rule effectively encourages suits against such relatively blameless parties because the real mastermind of the infringement is beyond the reach of the patent.

The Federal Circuit's rule also encourages improper and unfair risk-shifting by accused inducers. The inducer may be perfectly aware that his good-faith belief in invalidity could turn out to be erroneous. Yet, the risk of being mistaken about the patent's invalidity is effectively shifted to downstream users of infringing technology. It seems the wrong policy outcome to tell an inducer that he can knowingly cause others to infringe if he believes the patent to be invalid, and then let the induced parties bear all the risk that this belief may be wrong.

Such a rule does not further the policies behind theories of indirect infringement which were passed to provide a remedy in situations where suit against numerous direct infringers is not possible or unjust.

ARGUMENT

I. The Federal Circuit's Rule is Inconsistent with the Text, Structure, and Purpose of the Patent Act

A. 35 U.S.C. § 271(b) Defines Inducement in terms of Direct Infringement

Section 271 (b) provides "[w]hoever actively induces infringement of a patent shall be liable as an

infringer." While the text "makes no mention of intent," this Court has "infer[ed] that at least some intent is required." *Global-Tech Appliances, Inc. v. SEB S.A.*, 131 S.Ct. 2060, 2065 (2011). Accordingly, this Court has stated that Section 271(b) "requires knowledge of the existence of the patent that is infringed," and that willful blindness as to the existence of the patent could satisfy that requirement. *Id.* at 2068-2070.[2]

Since at least 2006, the Federal Circuit has held that Section 271(b) requires "specific intent" to cause infringement, including knowledge that the induced conduct actually infringes the patent. *DSU Med. Corp. v. JMS Co., Ltd.*, 471 F.3d 1293, 1305-1306 (2006) (en banc); *In re Bill of Lading Transmission & Processing Sys. Patent Litig.*, 681 F.3d 1323, 1339 (2012). Since *DSU Medical*, a number of claims for inducement have been dismissed based on the accused's good-faith belief of non-infringement. *See, e.g., Ecolab, Inc. v. FMC Corp.*, 569 F.3d 1335, 1351 (Fed. Cir. 2009); *Kinetic Concepts, Inc. v. Blue Sky*

---

[2] According to the Government "Global-Tech does not clearly resolve . whether the defendant must additionally possess actual knowledge that the induced conduct constitutes infringement." U.S. Amicus Br. 11. BIO agrees with the Government insofar as the Government concludes that it is unnecessary for the Court to resolve in this case whether inducement under Section 271(b) requires knowledge of the existence of the patent and that the induced conduct is infringing or whether inducement merely requires knowledge of the patent and of the induced conduct. This is "because neither party contests that aspect of the court of appeals' reasoning [and] . . . the soundness of that premise is not squarely at issue here." U.S. Amicus Br. at 13.

Med. Group, Inc., 554 F.3d 1010, 1024-1025 (Fed. Cir. 2009).

Assuming the correctness of the rule in *DSU Medical*, i.e., that a good-faith belief in non-infringement held by the inducer is enough to negate Section 271(b)'s scienter requirement, the Federal Circuit held in this case that a good-faith belief in *invalidity* of the patent in-suit may similarly be a defense to inducement liability. Pet. App. 11a. Specifically, the majority opinion states as follows: "We now hold that evidence of an accused inducer's good-faith belief of invalidity may negate the requisite intent for induced infringement." Pet. App. 12a-13a. In a footnote, the majority then says that it "certainly do[es] not hold 'that if the inducer of infringement believes in good faith that the patent is invalid, there can be no liability for induced infringement.'" Pet. App. 13a. Yet, it is unclear whether under the Federal Circuit's rule there could ever be a realistic set of circumstances where an accused inducer might be found liable for inducement if he possesses a pre-infringement, good-faith belief of invalidity and continues to hold that belief through the time period of direct infringement.

Notwithstanding the majority's qualification that a good-faith belief of invalidity only "may" negate Section 271(b)'s scienter requirement and assuming *arguendo* that a good-faith belief of non-infringement negates Section 271(b)'s scienter requirement even though this Court has not clearly endorsed that rule, *see* U.S. Amicus Br. 13, it would be error in any case to permit a party's subjective belief of invalidity to

negate Section 271(b)'s scienter requirement because the statute defines inducement within the context of direct infringement. *See Limelight Networks, Inc. v. Akamai Techs., Inc.*, 134 S. Ct. 2111, 2117 (2014).

Section 271(a) defines direct infringement by providing that "whoever without authority makes, uses, offers to sell, or sells any patented invention . . . infringes the patent." 35 U.S.C. 271(a). Because "unauthorized use, *without more*, constitutes infringement," *Aro Mfg. Co. v. Convertible Top Replacement Co.*, 377 U.S. 476, 484 (1964) (*Aro II*) (emphasis added), an accused "direct infringer's knowledge or intent is irrelevant" to the inquiry under Section 271(a). *Global-Tech*, 131 S. Ct. at 2065 n.2. Accordingly, direct infringement is a strict liability tort whose elements do not include the tortfeasor's belief that the patent is valid.

The Federal Circuit found "no principled distinction between a good-faith belief of invalidity and a good-faith belief of non-infringement," Pet. App. 11a, and reasoned that because the latter is clearly a defense to inducement, so too should be the former, *see id.* But a belief that the patent is invalid is not the same as a belief that the induced conduct is non-infringing. For example, one who knowingly induces conduct that practices every element of a patent's claim, believing that conduct falls *outside* of the scope of the claim, can be said to lack the requisite intent for inducement under the Federal Circuit's rule in *DSU Medical*. 471 F.3d at 1305-1306. But where that same person *knows* the induced conduct to fall *within* the scope of the claims,

he has knowingly induced "infringement" as that term is defined by Section 271(a), and would be liable under the rule in *DSU Med. Corp*, even where he holds a good faith belief that the patent claims are invalid.

Real-world examples of this abound in pharmaceutical litigation under the Drug Price Competition and Patent Term Restoration Act (commonly referred to as the "Hatch-Waxman Act"). For example, the supplier of a generic drug seeking FDA approval in an Abbreviated New Drug Application (ANDA) will often possess the requisite specific intent to induce infringement where the generic drug is alleged to be bioequivalent to the branded drug and where the branded drug is covered by one or more patents. *See Forest Laboratories Inc. v. Ivax Pharma*, 501 F.3d 1263, 1272 (Fed. Cir. 2007) (holding that "filing of an ANDA can create inducement liability for an ANDA applicant's manufacturer/supplier"). If a good-faith belief of invalidity is sufficient to avoid inducement liability, that same supplier or manufacturer would escape inducement liability in nearly every case because the ANDA applicant typically certifies pursuant to 21 U.S.C. § 355(j)(2)(A)(vii)(IV) of the Act that the patent is invalid.

Additionally, it is *not* "axiomatic" that "one cannot infringe an invalid patent." This "axiom" conflates the concept of liability for patent infringement with the elements of a claim for direct infringement. Pet. App. 57a (Reyna, J. dissenting from denial of rehearing en banc reasoning that a "more accurate statement" of the law is that a

finding of invalidity merely precludes *liability* for infringement, it cannot be used to negate the fact that the accused product or method falls within the scope of a patent's claims). Moreover, this axiom is inapplicable in this case because the underlying patent is not invalid, but rather is only *believed* to be invalid.

The Federal Circuit itself has warned against conflating non-infringement with absence of liability due to invalidity, calling the notion that one cannot infringe an invalid patent "a nonsense statement." *Spectra-Physics, Inc. v. Coherent, Inc.*, 827 F.2d 1524, 1535 (Fed. Cir.), cert. denied, 484 U.S. 954 (1987); *see also Medtronic, Inc. v. Cardiac Pacemakers, Inc.*, 721 F.2d 1563, 1583 (Fed. Cir. 1983). "Though an invalid claim cannot give rise to liability for infringement, whether it is infringed is an *entirely separate question capable of determination without regard to its validity*." *Id.* (emphasis added).[3]

As support for the position "that one cannot infringe an invalid patent," the majority cited *Richdel, Inc. v. Sunspool Corp.*, 714 F.2d 1573, 1580 (Fed. Cir. 1983) and *Prima Tek II, L.L.C. v. Polypap*

---

[3] Federal Circuit cases are in accord with the principle that non-infringement is a separate issue from absence of liability for infringement due to invalidity of the patent. *See, e.g., Pandrol USA, LP v. Airboss Ry. Prods., Inc.*, 320 F.3d 1354, 1365 (Fed. Cir. 2003); *Exergen Corp. v. Wal-Mart Stores, Inc.*, 575 F.3d 1312, 1320 (Fed. Cir. 2009) ("[B]ecause 'invalid claim[s] cannot give rise to liability for infringement,' SAAT cannot be liable for infringement of this patent."); *Connell v. Sears, Roebuck & Co.*, 722 F.2d 1542, 1550 (Fed. Cir. 1983) (recognizing "that infringement of an invalid patent can create no legal liability.").

S.A.R.L., 412 F.3d 1284, 1291 (Fed. Cir. 2005). Pet. App.11a. But as correctly pointed out by the dissent, both *Richdel* and *Prima Tek* simply declined to address the invalidity issue because it was mooted by a finding of non-infringement. Pet. App. 23a n.1. Any language in these cases equating the defense of invalidity with the defense of non-infringement provides far too shaky ground on which to build the foundation for a new inducement rule.

A good-faith belief of invalidity may well provide a defense to a charge of *willful* infringement. *See In re Seagate Tech., LLC*, 497 F.3d 1360, 1371 (Fed. Cir. 2007) (en banc) ("[T]o establish willful infringement, a patentee must show that the infringer acted despite an objectively high likelihood that its actions constituted infringement of a valid patent."). But importantly, the scienter necessary to avoid a charge of willful infringement has an objective component, and "the objective prong of *Seagate* tends not to be met [i.e., no "objectively high likelihood" of liability for patent infringement] where an accused infringer relies on a reasonable defense to a charge of infringement." *Id.* at 1368. Thus, the question for courts assessing culpability for willful infringement is often posed as whether the defense was "reasonable." *Bard Peripheral Vascular, Inc. v. W.L. Gore & Assocs., Inc.*, 682 F.3d 1003, 1005-06 (Fed. Cir. 2012) *cert. denied*, 133 S. Ct. 932 (2013).

Unlike the standard for willful infringement set forth in *Seagate*, the Federal Circuit's new rule that a good-faith belief of invalidity can supply a defense to inducement has no objective component. So long

as the belief is held in *subjective* good-faith the defense is available. Pet. App. 12a-13a. Under this rule, unlike the rule in *Seagate* with respect to willful infringement, the defense may be entirely meritless and yet still provide the inducer with a complete avoidance of liability. Pet. App. 20a (explaining that on remand, "the jury must merely decide whether Cisco possessed that belief in good-faith. The jury need not decide whether the underlying position was meritorious.").

But even if an objective component were included in the Federal Circuit's "good-faith belief of invalidity" rule, that would still not change the fact that the rule unjustly favors those who knowingly encourage another's direct infringement because these people may develop reasonable (but ultimately incorrect) invalidity defenses by virtue of their pre-infringement knowledge of the patent, whereas the direct infringer has no such defense whether he knows of the patent or not. Even where a subjectively held belief of invalidity is objectively reasonable, the patent may still be adjudicated valid, and in such cases, the inducer escapes all liability and the direct infringer, who in many cases is relatively blameless, judgment-proof, or both, is left holding the bag.

B. The Federal Circuit's Rule is An End-Run Around the Heightened Burden of Proof for an Invalidity Defense

The Patent Act has separate provisions for the defenses of non-infringement and invalidity. *See* 35 U.S.C. § 282(b)(1) and (2). A successful invalidity defense under Section 282 requires proof "by clear and convincing evidence." *See Microsoft Corp v. i4i ltd. P'ship.*, 131 S. Ct. 2238, 2246 (2011). "A patent shall be presumed valid." *See* 35 U.S.C. § 282(a). The presumption of validity in Section 282 was enacted against a settled legal backdrop that a patent's validity could not be overthrown by a mere preponderance of evidence. *See Smith v. Hall*, 301 U.S. 216, 233 (1937) (challenger bears a "heavy burden of persuasion" when seeking to invalidate a patent); *Mumm v. Jacob E. Decker & Sons*, 301 U.S. 168, 171 (1937) (The "burden is a heavy one, as it has been held that every reasonable doubt should be resolved against him."); *Eibel Process Co. v. Minnesota & Ontario Paper Co.*, 261 U.S. 45, 60 (1923) (evidence of invalidity must be "clear and satisfactory"); *Adamson v. Gilliland*, 242 U.S. 350, 353 (1917) ("requiring the defendant to prove his case beyond a reasonable doubt"); *Deering v. Winona Harvester Works*, 155 U.S. 286, 301 (1894) (invalidity must be proven "by evidence so cogent as to leave no reasonable doubt in the mind of the court"); *Cantrell v. Wallick*, 117 U.S. 689, 696 (1886) ("every reasonable doubt should be resolved against" invalidity); *Brown v. Guild (The Corn-Planter Patent)*, 90 U.S. 181, 227 (1874) (requiring "conclusive evidence" of invalidity); *Coffin v. Ogden*, 85 U.S. 120, 124 (1873) ("every reasonable doubt should be resolved against" invalidity).

By permitting an inducer to avoid liability by virtue of a good-faith belief of invalidity, the Federal Circuit provides a pathway by which one accused of inducement may effectively assert an invalidity defense that runs up against no presumption of validity, and that can be established on evidence that is less than "clear and convincing." As demonstrated by the facts of this case, an inducer may avoid liability by a *mistaken* belief of invalidity. So long as it is held in good faith, the inducer's invalidity defense can be entirely meritless. Pet. App. 20a.

While it is true that a successful defense to inducement based on a good-faith belief of invalidity does not result in an invalid patent, the practical result is the same for the litigants. Relatively few circumstances exist under the Federal Circuit's rule where one accused of inducement would need to meet the heightened burden of proof for invalidity. So long as the accused inducer has some evidence showing a good-faith belief of invalidity, there would be no need to prove invalidity by clear and convincing evidence.

If the frequency with which accused infringers assert invalidity defenses in patent litigation is any indication, it does not take much for one to form a "good-faith belief of invalidity" consistent to meet Rule 11. A myriad of invalidity defenses are typically asserted in any given patent litigation. For example, in this case, Cisco asserted anticipation, obviousness, indefiniteness, lack of enablement, and lack of written description. *See Commil USA, LLC v. Cisco Sys., Inc.*, No. 2:07-cv-341, Dkt. No. 42, at 10, (E.D. Tex. Nov. 30, 2007).

Moreover, challenges to subject-matter eligibility for patented methods under 35 U.S.C. § 101 have increased in view of this Court's decisions in *Mayo Collaborative Services v. Prometheus Laboratories, Inc.*, 132 S. Ct. 1289, 1294, 182 L. Ed. 2d 321, 337 (2012) and *Alice Corp v. CLS Bank Int'l*, 82 L. Ed. 2d 296 (2014). And challenges to a patent's validity based on obviousness, 35 U.S.C. § 103, are fundamentally easier to mount in view of this Court's decision in *KSR Int'l Co. v. Telflex Inc.*, 550 U.S. 398 (2007), which rejected the Federal Circuit's requirement for some "teaching, suggestion, or motivation" to combine prior art references in order to make an obviousness challenge. *Id.* at 419. Accordingly, any party even remotely worried about a future claim for inducement can (and under the Federal Circuit's rule, most certainly will) develop some theory for invalidity, filing it away as proof of his subjective, good-faith belief of invalidity, and go on continuing to induce direct infringement by others.

Under the Federal Circuit's rule, it is even possible that a USPTO decision granting reexamination *alone* may provide a complete defense to inducement. *See, e.g., Ultratec, Inc. v. Sorenson Communs., Inc.*, No. 13-cv-346, 2014 U.S. Dist. LEXIS 120134, at *112 (W.D. Wis. Aug. 28, 2014) ("Pointing again to the board's grant of *inter partes* review, defendants argue that their invalidity defenses are objectively reasonable and preclude a finding of induced infringement . . .").

By statute, the USPTO will institute reexamination if it finds that the petition has raised a "substantial new question of patentability." 35 U.S.C. § 304. Reexamination under this standard is granted in over 90% of cases. UNITED STATES PATENT AND TRADEMARK OFFICE, EX PARTE REEXAMINATION FILING DATA—SEPTEMBER 30, 2013 (Jan. 22, 2015, 4:48 PM), http://www.uspto.gov/patents/stats/ex_parte_historical_stats_roll_up_EOY2013.pdf. For *inter partes* review, the standard for institution is whether "there is a reasonable likelihood that the petitioner would prevail with respect to at least 1 of the claims challenged in the petition." 35 U.S.C. § 314(a). Review under this standard is granted in over 77% of cases. UNITED STATES PATENT AND TRADEMARK OFFICE, AIA PROGRESS (AS OF JANUARY 15, 2015) (Jan. 22, 2015, 5:19 PM), http://www.uspto.gov/ip/boards/bpai/stats/011515_aia_stat_graph.pdf (reporting that out of 1361 total decisions there have been decisions to grant review in 1052).

The Federal Circuit's rule also creates a perverse incentive for accused infringers to obtain exculpatory opinions of counsel or develop other forms of exculpatory evidence that might be used later to show a good-faith belief of invalidity. In this sense, the inducer who is aware of the patent stands to *benefit* from his pre-infringement knowledge of the patent despite taking affirmative steps to cause another to directly infringe the patent. The inducer, by knowing about the patent in time to develop exculpatory evidence of invalidity, can avoid liability altogether even where the validity of the patent is

upheld, unjustly leaving the direct infringer holding the bag. And as explained *infra*, direct infringers in the context of some biotechnological inventions (e.g., methods of treatment and methods of use) are invariably less culpable than those typically accused of inducement.

Cases since *Global-Tech* have suggested that summary judgment of no inducement may be appropriate based on the defendant's reliance on an opinion of counsel expressing the view that the asserted patent was invalid. *See, e.g.*, Bose *Corp. v. SDI Techs., Inc.*, 558 Fed. Appx. 1012, 1024 (Fed. Cir. 2014) (holding that "an invalidity opinion of counsel" coupled with "unquestionable proof of good-faith reliance" would "support a summary judgment of no indirect infringement").

This is not the first time the Federal Circuit has fashioned a rule encouraging those accused of infringement to obtain exculpatory opinions of counsel whose only purpose is to defend against liability for patent infringement. In *Underwater Devices, Inc. v. Morrison-Knudsen Co.*, 717 F.2d 1380 (Fed. Cir. 1983) the Federal Circuit created a "duty to seek and obtain competent legal advice from counsel before the initiation of any possible infringing activity." *Id.* at 1389-90. This duty to seek an exculpatory opinion of counsel led to "inappropriate burdens on the attorney-client relationship." *Knorr-Bremse Systeme Fuer Nutzfahrzeuge GmbH v. Dana Corp.*, 383 F.3d 1337, 1343 (Fed. Cir. 2004). Under this regime, accused infringers were often forced to choose between the

protections afforded by the attorney-client privilege and the necessary disclosure of an exculpatory opinion of counsel in order to defend against allegations of willful patent infringement. *Id.*

II. The Federal Circuit's Rule Undermines the Statutory Framework for Pharmaceutical Litigation

By opening the door to good-faith assertions of invalidity as a defense to induced infringement, the Federal Circuit's rule undermines the statutory framework laid out in the Hatch-Waxman Act for patent litigation.

In passing the Hatch-Waxman Act in 1984 and similar legislation in 2010 for large-molecule drugs known as "biologics," *see* Title VII, Subtitle A of the Patient Protection and Affordable Care Act, Pub. L. No. 111-148, §§ 7001–03, 124 Stat. 119, 804–21 (2010), Congress created pathways for the approval of generic and "biosimilar" drugs. Contained within these pieces of legislation are specific provisions governing the litigation of patents.

In the Hatch-Waxman context, a generic drug manufacturer can certify that any patent purporting to protect the branded drug or treatment "is invalid or will not be infringed by the manufacture, use, or sale" of the drug described in the ANDA. *See* §355(j)(2)(A)(vii)(IV). This is known as a "paragraph IV certification." It automatically counts as patent infringement, *see* 35 U.S.C. § 271(e)(2)(A) (2006 ed., Supp. V), and in many cases "provok[es] litigation," *Caraco Pharm. Labs., Ltd.* v. *Novo Nordisk A/S*, 132

S. Ct. 1670, 1677 (2012). If the brand-name patentee brings an infringement suit within 45 days, the FDA withholds approval of the generic for at least 30 months while the parties litigate patent validity or infringement. Approval and generic product launch can occur sooner if the case is resolved favorably to the ANDA-filer before 30 months. In short, the 30-month stay is meant to provide sufficient time for the parties or the court to resolve any disputes over the validity or infringement of the patent before the ANDA product is brought to market. *See FTC v. Actavis*, 133 S. Ct. 2223, 2228 (2013).

Under the Federal Circuit's rule, however, meaningful resolution of invalidity defenses raised in the context of paragraph IV certifications may become increasingly difficult to achieve within 30 months. This is because under the Federal Circuit's rule, ANDA-filers may avoid litigating invalidity defenses to conclusion where the infringement theory depends on inducement. In such cases, an ANDA-filer's paragraph IV certification of invalidity negates Section 271(b)'s scienter requirement, allowing the ANDA-filer to go to market without having to litigate the invalidity defense on the merits. This short-circuits a core goal of Hatch-Waxman, which is to resolve patent disputes on the merits *before* the ANDA product is brought to market.

Where the merits of an invalidity defense are litigated to conclusion in a Hatch-Waxman case, this can often take more than 30 months, particularly where multiple invalidity theories are raised. In such cases, the ANDA filer may choose to launch "at risk," i.e., sell its generic drug product upon receiving FDA

approval but prior to the resolution of pending patent litigation. The Federal Circuit's rule may encourage more such "at-risk" launches where the infringement theory depends on inducement. The ANDA-filer in such cases really has no risk if he has certified invalidity of the patent under paragraph IV of the Hatch-Waxman Act.

In either of the above scenarios from Hatch-Waxman litigation, questions of invalidity may be left unresolved before the ANDA product goes to market.

III. Inducement is an Important Strategy for Patent Enforcement in the Life-Sciences Industry

Method of treatment patents and methods of using biochemical substances in medicine, agriculture, and industrial processing have long been important to protect and thereby promote investment in new biotechnological development. Years (even decades) can elapse before an innovator establishes how a medicinal molecule can be put to practical use. For example, azidothymidine ("AZT"), the first drug approved for the treatment of HIV/AIDS, was approved by the FDA in 1987. *See, e.g.*, *Burroughs Wellcome Co. v. Barr Labs.*, Inc., 40 F.3d 1223, 1226 (Fed. Cir. 1994). AZT was originally designed in 1964 as an anticancer drug but was shelved after demonstrating poor uptake in cancer cells. *See* Mark Yarchoan, *The History of Zidovudine (AZT): Partnership and Conflict*, SCRIBD 4 (2012),

http://www.scribd.com/doc /92129927/The-History-of-Zidovudine-AZT-Partnership-and-Conflict#scribd.

Two decades passed before AZT was investigated for efficacy against clinically significant retroviruses, including HIV. *See id.* Thus, the AZT compound was old and not patentable by the time AIDS began to kill (at first) hundreds and then thousands of young men in the United States in the early and mid-1980s.

With no treatment in sight, researchers at the National Cancer Institute solicited collaboration from private pharmaceutical actors to study orphan drug compounds that were otherwise unlikely candidates for investment. *See id.* at 2-3. Burroughs Wellcome researchers investigated AZT's antiretroviral activity and selected it as a candidate drug for the treatment of HIV/AIDS. *Burroughs Wellcome,* 40 F.3d at 1226. Subsequent work with the National Cancer Institute provided proof of AZT's efficacy and led to an accelerated clinical development program that absorbed more than 20% of Burroughs Wellcome's entire R&D budget. *See* Yarchoan at 7. At the time of AZT's approval, one third of all AIDS patients in the U.S. had received free access—worth an estimated $10 million—to the drug. *See id* (citing to B.W. & CO. PEOPLE., BURROUGHS-WELLCOME COMPANY: THE RETROVIR STORY (Hunter Publishing Co.) (1987)).

Making AZT quickly available on a large scale required significant effort and investment. For instance, Burroughs Wellcome had to locate and convince a Pfizer subsidiary to revamp and

accelerate the chemical process for synthesizing thymidine, a key precursor material for AZT, to build on a miniscule worldwide supply. *See* Brian O'Reilly and Nora E. Field, *The Inside Story of the AIDS Drug*, FORTUNE, Nov. 5, 1990, at 112, *available at* http://archive.fortune.com/magazines/fortune/fortune_archive/1990/11/05/74308/index.htm.

Burroughs Wellcome's enormous investment, which one estimate put at between $80 and $180 million (unadjusted for inflation), was necessarily protected by patents to methods for formulating AZT and for using AZT to treat HIV/AIDS, as protection for the chemical molecule was no longer available. *See* Yarchoan at 5; see also Philip J. Hilts, *AIDS Drug's Maker Cuts Price by 20%*, N.Y. TIMES, Sep. 19, 1989, *available at* http://www.nytimes.com/1989/09/19/us/aids-drug-s-maker-cuts-price-by-20.html?pagewanted=2.

Direct infringers of patents like the ones protecting the use of AZT to treat HIV/AIDS are often patients or prescribing physicians, diagnosticians, and other care providers. *See* Michael Edward McCabe, Jr. and Lindsay J. Kile, *Recent Developments in Patent Law and Their Impact on the Pharmaceutical and Biotechnology Industries*, 19 U. BALT. INTELL. PROP. L.J. 75, 78 (2011). Thus, "patent owners must turn to a theory of inducing infringement in order to assert these types of claims against competitors." Randall E. Kay, *Inducing Patent Infringement—Developments that Pharmaceutical Companies Need to Know*, 5 BLOOMBERG LAW REPORTS—INTELLECTUAL PROPERTY NO. 6 (Bloomberg Finance L.P. 2011). Accordingly,

there can be no question that actions for induced infringement are important strategic tools for patent enforcement in biotechnology. *See, e.g.*, Erik P Harmon, *Promoting the Progress of Personalized Medicine: Redefining Infringement Liability for Divided Performance of Patented Methods*, 42 HOFSTRA L. REV. 976, 981 ("[D]iagnostic testing and treatment methods involve the interaction between a clinical laboratory and a physician[.]"); *Hoechst-Roussel Pharms., Inc. v. Lehman*, 109 F.3d 756, 759 (Fed. Cir. 1997) ("The right to exclude may arise from the fact that when administered, [the accused product] metabolizes into another product . . which Hoechst has claimed."); *see also Zenith Lab., Inc. v. Bristol-Myers Squibb Co.*, 19 F.3d 1418, 1421-22 (Fed. Cir. 1994) (stating that a compound claim could cover a compound formed upon ingestion).

Moreover, biotechnology companies commonly invest substantially in research and development of process technology. Process technology is typically protected by method of manufacturing patents that will typically only be infringed by inducement. Investment in this technology commonly requires significant capital expenditures in brick-and-mortar facilities that cannot be re-tooled because they are designed to practice very particular biological or chemical processes, some of which are subject to "establishment licenses," necessary for the operation of cost-intensive pilot plants or full-scale production facilities in compliance with a Biologics License Application ("BLA").

IV. The Federal Circuit's Rule Encourages Inefficient and (in Many Cases) Unfair Suits against End Users

In cases where inducement is the only pathway for enforcement, the Federal Circuit's rule may lead to suits against end users, such as retail service providers and consumers, who are in most cases less culpable than the companies who are providing means for or otherwise encouraging direct infringement. *See, e.g.*, Dmitry Karshtedt, *Damages for Indirect Patent Infringement*, 91 WASH. U.L. REV. 911, 968 (2014) (reasoning that "in terms of the relative allocation of responsibility . . the directly infringing end user is typically clueless and blameless."). For a multitude of reasons, not least of which include the practical difficulties associated with identifying, suing, and obtaining meaningful damages from large numbers of entities whose infringing conduct was induced, the end user has traditionally been avoided as a defendant in favor of the alleged inducer. *See, e.g.*, *Wallace v. Holmes*, 29 F. Cas. 74, 80 (C.C.D. Conn. 1871) (No. 17,100) (noting that given the relative value of a single unit of the patented product and the trouble and expense of prosecution, forcing the patentee to search out individual purchasers who actually infringe the patent "would make the [patentee] helpless and remediless.")

The Federal Circuit's rule also encourages improper risk-shifting by those who induce the direct infringement of others or who provide the instrumentalities for direct infringement by others.

Putative inducers are often better-positioned than downstream end users in terms of having greater means and sophistication to gauge the risk of patent infringement liability. The inducer may be perfectly aware that his good-faith belief of invalidity could turn out to be mistaken. Under the Federal Circuit's rule, however, the inducer does not assume the risk that his invalidity defense could be mistaken—his defense stands whether or not the patent is eventually found invalid. Instead, the inducer can effectively shift the risk of a mistaken belief of invalidity to downstream end users. Any rule that permits an inducer to unreasonably shift his risk of potential infringement liability to end users does not further any of the policy goals of Section 271(b). This is because suits against largely blameless direct infringers run counter to the policies underlying indirect infringement.

In *Aro II*, this Court explained that the purpose of 35 U.S.C. § 271(c) was "to provide for the protection of patent rights where enforcement against direct infringers is impracticable." 377 U.S. at 511 (quoting H.R. 5988, 80th Cong., 2d Sess.; H.R. 3866, 81st Cong., 1st Sess.); *see also*, *e.g.*, 5-17 Chisum on Patents § 17.04[4][f] ("A patent owner's ability to prevent active inducement by advertising and instruction or other activity is often critical to obtaining effective protection for a patented invention consisting of a new method of use of a known, staple product . .").

Legislative history likewise suggests intent to avoid suits against a multitude of direct infringers.

"[T]he practical way to stop the infringement is to sue the man who caused the infringement, rather than the multitude of persons who are infringing." *Contributory Infringement in Patents–Definition of Invention: Hearings on H.R. 5988 before the Subcomm. on Patents, Trademarks, & Copyrights of the H. Comm. on the Judiciary*, 80th Cong., 2nd Sess., ser. 21, at 3 (1948) (statement of Giles S. Rich); *see also* Statement of Giles Rich, Hearings before Subcommittee No. 3 of House Judiciary Committee on H.R. 3760, 82d Cong., 1st Sess., at 160 ("the practical way to give the patentee some way to enforce this patent right that he has been given is to let him go after the brains of the enterprise, the person who is really responsible and not the innocent end user.")

CONCLUSION

Because the Federal Circuit's decision fundamentally weakens patents in life-sciences industries by effectively eliminating inducement wherever the accused has a subjectively held good-faith belief of invalidity and because that rule is inconsistent with the text, structure, and purpose of Section 271(b), the decision should be reversed.

Respectfully submitted,

MARK P. WALTERS
Counsel of Record
LAWRENCE D. GRAHAM
GARY M. MYLES, PH.D.
JOHN A. MORGAN
LOWE GRAHAM JONES LLP
701 5th Ave, Suite 4800
Seattle, WA 98104
(206) 381-3300
walters@lowegrahamjones.com
Counsel for *Amicus Curiae*

January 27, 2015

AMICUS CURIAE BRIEF

Supreme Court, U.S.
FILED
FEB 26 2015
OFFICE OF THE CLERK

No. 13-896

In The
Supreme Court of the United States

COMMIL USA, LLC,

Petitioner,

v.

CISCO SYSTEMS, INC.,

Respondent.

On Writ Of Certiorari To The United States Court Of Appeals For The Federal Circuit

BRIEF *AMICUS CURIAE* OF THE COMPUTER & COMMUNICATIONS INDUSTRY ASSOCIATION IN SUPPORT OF RESPONDENT

MATTHEW LEVY
MATTHEW SCHRUERS
COMPUTER & COMMUNICATIONS INDUSTRY ASSOCIATION
900 17th Street NW,
Suite 1100
Washington, D.C. 20006
(202) 783-0070
mlevy@ccianet.org

JONATHAN BAND
Counsel of Record
JONATHAN BAND PLLC
21 Dupont Circle NW,
Suite 800
Washington, D.C. 20036
(202) 296-5675
jband@policybandwidth.com

Counsel for Amicus Curiae

February 26, 2015

COCKLE LEGAL BRIEFS (800) 225-6964
WWW.COCKLELEGALBRIEFS.COM

TABLE OF CONTENTS

Page

TABLE OF CONTENTS i

TABLE OF AUTHORITIES iii

INTEREST OF *AMICUS CURIAE* 1

INTRODUCTION AND SUMMARY OF ARGUMENT 2

ARGUMENT 4

I. THE FEDERAL CIRCUIT CORRECTLY INTERPRETED AND APPLIED THIS COURT'S PRECEDENTS REGARDING INDUCEMENT TO INFRINGE A PATENT 4

A. The Federal Circuit Correctly Held That a Good-Faith Belief That a Patent Is Invalid Is Relevant to Determining Intent Under 35 U.S.C. § 271(b) 4

B. *Global-Tech* Held That Knowledge of Patent Infringement Liability Is Required to Show Inducement to Infringe 7

C. Including a Broader Class of Conduct Under 35 U.S.C. § 271(b) Is Unnecessary Because Patent Owners Have a Remedy Under 35 U.S.C. § 271(a)..... 10

D. Expanding Liability Under 35 U.S.C. § 271(b) Would Embolden Patent Assertion Entities 11

TABLE OF CONTENTS – Continued

Page

II. THE COURT SHOULD NOT UNDERMINE THE STANDARD FOR INTENTIONAL INDUCEMENT OF COPYRIGHT INFRINGEMENT ANNOUNCED IN *GROKSTER* 12

A. *Grokster* Held That Intent to Induce Infringement Is Necessary for Contributory Copyright Infringement Liability 14

B. *Grokster* Required That Intent to Induce Infringement of Copyright Must Be Shown by Clear Expression or Affirmative Steps 17

C. Erosion of *Grokster* Would Threaten the Information Technology Industry 19

CONCLUSION 21

TABLE OF AUTHORITIES

Page

CASES

A&M Records v. Napster, 239 F.3d 1004 (9th Cir. 2001) 15

Bilski v. Kappos, 130 S. Ct. 3218 (2010) 9

Commil USA, LLC v. Cisco Systems, Inc., 720 F.3d 1361 (Fed. Cir. 2013) 4, 5, 7

eBay, Inc. v. MercExchange L.L.C., 547 U.S. 388 (2006) 9

Gershwin Publishing Corp. v. Columbia Artists Management, 443 F.2d 1159 (2d Cir. 1971) 15

Global-Tech Appliances, Inc. v. SEB S.A., 131 S. Ct. 2060 (2011) 2, 7, 8, 9

KSR Int'l Co. v. Teleflex Inc., 127 S. Ct. 1727 (2007) 9

MGM Studios Inc. v. Grokster, Ltd., 380 F.3d 1154 (9th Cir. 2004) 15

MGM Studios Inc. v. Grokster, Ltd., 545 U.S. 913 (2005) ..... *passim*

Prima Tek II, L.L.C. v. Polypap S.A.R.L., 412 F.3d 1284 (Fed. Cir. 2005) 6

Richdel, Inc. v. Sunspool Corp., 714 F.2d 1573 (Fed. Cir. 2003) 5

Sony Corp. v. Universal City Studios, Inc., 464 U.S. 417 (1984) ..... *passim*

TABLE OF AUTHORITIES – Continued

Page

Spectra-Physics, Inc. v. Coherent, Inc., 827 F.2d 1524 (Fed. Cir. 1987) 5

Unique Concepts, Inc. v. Brown, 939 F.2d 1558 (Fed. Cir. 1991) 5

STATUTES

17 U.S.C. § 106 20

17 U.S.C. § 107 19

35 U.S.C. § 271(a) 3, 6, 8, 10, 11

35 U.S.C. § 271(b) ..... *passim*

35 U.S.C. § 271(c) 8, 10, 15, 16

OTHER AUTHORITIES

AIPLA, *Report of the Economic Survey 2013* (July 2013) 12

Black's Law Dictionary (7th Ed. 1999) 6

INTEREST OF *AMICUS CURIAE*[1]

The Computer & Communications Industry Association ("CCIA") represents over twenty companies of all sizes providing high technology products and services, including computer hardware and software, electronic commerce, telecommunications, and Internet products and services – companies that collectively generate more than $465 billion in annual revenues.[2] As manufacturers and providers of goods and services utilized by hundreds of millions of people around the world, CCIA members have a considerable stake in the proper and unambiguous interpretation of secondary liability doctrines in intellectual property matters, including the theory of inducement. The adoption of the expansive new version of inducement liability urged by Commil and the government would pose serious consequences for CCIA members and the technology industry as a whole.

---

[1] No counsel for any party authored this brief in whole or part, and no person other than *amicus curiae* or their counsel made a monetary contribution to the preparation or submission of this brief. Petitioner and Respondent have consented to the filing of this brief, and the letters of consent are being filed herewith.

[2] A list of CCIA members is available at http://www.ccianet.org/members.

INTRODUCTION AND SUMMARY OF ARGUMENT

Unlike many federal causes of action, both patent and copyright law provide not only for direct liability, but also secondary liability. Under theories of indirect infringement, a business may be held responsible for the infringements of its customers, even when providing general-purpose goods and services. This risk is manageable only because theories of secondary liability invariably require some indicia of malfeasance, such as volitional conduct, material contribution to the infringement, knowledge, financial benefit, and/or the right and ability to control the infringing activity. These constraints ensure that theories of indirect infringement do not paralyze the economy with secondary liability litigation.

Commil and the government propose a version of inducement liability, however, in which a good-faith belief of non-infringement is irrelevant. Under this theory, mere knowledge of a patent is enough for a manufacturer or service provider to be held to have induced a customer to infringe the patentee's franchise. By this reasoning, a person would intentionally induce infringement when enabling others to practice a technology even though he believes it to be unpatentable.

Commil and the government's theory is, however, inconsistent with this Court's precedent. The Court's opinion in *Global-Tech Appliances, Inc. v. SEB S.A.*, 131 S. Ct. 2060 (2011) clearly held that knowledge of

infringement is required to show inducement under 35 U.S.C. § 271(b). It would be a change in the law to lower the standard for proving inducement by requiring no more than knowledge of the *patent*.

Such a change in the law would be both unnecessary and harmful. It is unnecessary because patent owners still have a complete remedy for infringement of their patents under 35 U.S.C. § 271(a). It is harmful because patent assertion entities ("PAEs") would be able to leverage such a change to do even more damage to the economy and to American businesses.

In no event should the disposition of Commil's claims undermine the standard for intentional inducement of copyright infringement announced in *MGM Studios Inc. v. Grokster, Ltd.*, 545 U.S. 913 (2005). Regardless of how this case is resolved, it is imperative that the Court not overturn *Grokster*'s requirement that intent to induce copyright infringement must be proven with clear expression or affirmative steps. To erode this high standard would threaten innovation and investment in the information technology industry. Accordingly, this brief urges that the Federal Circuit be upheld to avoid creating unmanageable risks to manufacturers and service providers.

ARGUMENT

I. THE FEDERAL CIRCUIT CORRECTLY INTERPRETED AND APPLIED THIS COURT'S PRECEDENTS REGARDING INDUCEMENT TO INFRINGE A PATENT

A. The Federal Circuit Correctly Held That a Good-Faith Belief That a Patent Is Invalid Is Relevant to Determining Intent Under 35 U.S.C. § 271(b)

Commil's question presented is as follows:

> Whether a good-faith belief that a patent is invalid is a defense to inducement liability under Section § [sic] 271(b).

Pet. Br. at i. Yet this question does not accurately reflect the decision below. The Federal Circuit's decision in *Commil USA, LLC v. Cisco Systems, Inc.*, 720 F.3d 1361 (Fed. Cir. 2013), held, in relevant part, that it was a clear error to exclude evidence of a good faith belief that the patent-in-suit is invalid. *Commil* at 1368-69. The court expressly did *not* hold that such a good-faith belief, no matter how unreasonable, is invariably a full defense to liability under 35 U.S.C. § 271(b):

> We now hold that evidence of an accused inducer's good-faith belief of invalidity may negate the requisite intent for induced infringement. This is, of course, not to say that such evidence precludes a finding of induced infringement. Rather, it is evidence that should be considered by the fact-finder in

> determining whether an accused party knew "that the induced acts constitute patent infringement."

Id. (internal citation and footnote omitted).

Evidence of a good-faith belief of invalidity is clearly relevant to an accused inducer's intent. A party who reasonably believes in good faith that a patent is invalid did not intend to induce infringement, because, as Judge Giles Rich noted, if a claim is invalid, "there is nothing to be infringed."[3] *Richdel, Inc. v. Sunspool Corp.*, 714 F.2d 1573, 1580 (Fed. Cir. 2003).

---

[3] The government's brief uses two out-of-context quotes from earlier opinions by Judge Rich in order to argue the opposite, namely that an invalid claim can still be infringed. First, the government quotes a dissent from Judge Rich in *Unique Concepts, Inc. v. Brown*, 939 F.2d 1558 (Fed. Cir. 1991). *See* Brief for the United States as *Amicus Curiae* (SG Br.) at 24. The paragraph containing the quote makes his intended meaning clear, which is that parties could not constrain the court's claim construction by stipulation. *Id.* at 1561. He was *not* saying anything about whether an invalid patent can be infringed.

The second quote from Judge Rich is from *Spectra-Physics, Inc. v. Coherent, Inc.*, 827 F.2d 1524 (Fed. Cir. 1987). *See* SG Br. at 25 ("[A]s Judge Giles Rich – another of the principal architects of the Patent Act of 1952 – put it, the assertion that 'invalid claims cannot be infringed' is 'a nonsense statement.'"). In *Spectra-Physics*, the statement was nonsense *in that context*. Judge Rich was referring to the fact that infringement and invalidity are two separate issues, and that it was improper to infer anything about the jury's conclusions with respect to the best mode requirement based on its finding of infringement. *Spectra-Physics*, 827 F.2d at 1535.

Commil and the government appear to argue that a potential inducer should be expected to focus on a technical legal issue (*i.e.*, whether patent claims read on the conduct to be induced) rather than whether the induced conduct would lead to liability. *See* SG Br. at 22 ("[A] finding of invalidity does not negate the *fact* of infringement, but instead precludes *liability* for that infringement." (emphases in original)). The government also misstates the law of inducement, claiming that "[t]he inducee's unauthorized performance of all steps of a patented method constitutes direct 'infringement,' even if the patent is ultimately found to be invalid." *Id.* at 21. The government's argument rests on the fact that invalidity must be pled as an affirmative defense. *Id.* at 22-23. This is a distinction without a difference.

As the government's brief acknowledges, *see id.* at 10, Section 271(b) creates a type of "secondary liability." By definition, secondary liability requires primary liability. *See* Black's Law Dictionary 925-27 (7th Ed. 1999). Section 271(b) is intended to deter a party from inducing conduct that would give rise to primary liability for patent infringement. If the induced party would not be liable under Section 271(a), there is no reason to deter such inducement.

Moreover, if a patent is actually invalid there can be no liability under Section 271(b). *Prima Tek II, L.L.C. v. Polypap S.A.R.L.*, 412 F.3d 1284, 1291 (Fed. Cir. 2005) (observing that "there can be no contributory or induced infringement of invalid patent claims"). Similarly, if a patent is not infringed, there

is no liability under Section 271(b). As the opinion below recognized, there is no reason to treat the two differently with respect to intent. *See Commil*, 720 F.3d at 1367-68. A belief of non-infringement is a belief of no liability under Section 271(b), as is a belief of invalidity. There is no basis for admitting evidence of one while excluding evidence of the other.

In light of the purpose of Section 271(b), evidence of a good-faith belief of invalidity is certainly relevant to intent. Accordingly, the Federal Circuit correctly held that the jury should be allowed to hear such evidence.

B. *Global-Tech* Held That Knowledge of Patent Infringement Liability Is Required to Show Inducement to Infringe

Commil and the government do not accurately characterize this Court's opinion in *Global-Tech Appliances, Inc. v. SEB S.A.*, 131 S. Ct. 2060 (2011). The issue in *Global-Tech* was whether deliberate indifference to a known risk of inducement could lead to liability under Section 271(b). The Court held that it could. *Id.* at 2069.

In order to reach that conclusion, the Court first interpreted the language of Section 271(b). As the Court observed:

> In referring to a party that "induces infringement," this provision may require merely that the inducer lead another to

> engage in conduct that happens to amount to infringement, i.e., the making, using, offering to sell, selling, or importing of a patented invention. *See* § 271(a). On the other hand, the reference to a party that "induces infringement" may also be read to mean that the inducer must persuade another to engage in conduct that the inducer knows is infringement. Both readings are possible.

Id. at 2065 (footnote omitted). The Court held that the second meaning is the correct reading of Section 271(b):

> Accordingly, we now hold that induced infringement under § 271(b) requires knowledge that the induced acts constitute patent infringement.

Id. at 2068.

The government's description of this holding as a "suggestion" cannot be correct, as Justice Kennedy's dissent in *Global-Tech* makes clear:

> The Court is correct, in my view, to conclude that 35 U.S.C. § 271(b) must be read in tandem with § 271(c), and therefore that to induce infringement a defendant must know "the induced acts constitute patent infringement."
>
> . . .
>
> One can believe that there is a "high probability" that acts might infringe a patent but nonetheless conclude they do not

> infringe. The alleged inducer who believes a device is noninfringing cannot be said to know otherwise.

Id. at 2072 (Kennedy, J., dissenting) (internal citations omitted). The *Global-Tech* dissent would make no sense if the government's reading of *Global-Tech* were correct.[4]

This Court has in the past criticized the Federal Circuit for failing to follow its instructions and for using overly rigid tests.[5] In this case, however, the Federal Circuit did precisely what this Court instructed. It correctly applied *Global-Tech* and issued a reasonable decision. It did not create an absolute rule; rather, the Federal Circuit held merely that a jury should be allowed to consider evidence of a good-faith belief of invalidity in its deliberations. Accordingly, its decision should be affirmed.

---

[4] Neither Commil nor the government address Justice Kennedy's dissent in *Global-Tech*.

[5] *See, e.g.*, *KSR Int'l Co. v. Teleflex Inc.*, 127 S. Ct. 1727, 1739 (2007) ("We begin by rejecting the rigid approach of the Court of Appeals."); *Bilski v. Kappos*, 130 S. Ct. 3218, 3226 (2010) (rejecting Federal Circuit's reasoning as failing to follow the Court's precedents); *eBay, Inc. v. MercExchange L.L.C.*, 547 U.S. 388, 393 (2006) (rejecting Federal Circuit's "categorical" granting of injunctive relief).

C. Including a Broader Class of Conduct Under 35 U.S.C. § 271(b) Is Unnecessary Because Patent Owners Have a Remedy Under 35 U.S.C. § 271(a)

Commil argues that affirming the Federal Circuit would "deprive patentees of their statutory remedy for infringement of valid patents," Pet. Br. at 36, and "dramatically weaken patentees' rights under 35 U.S.C. § 271(b)," Pet. Br. at 37. Neither claim is true.

In order for there to be indirect infringement under either 35 U.S.C. § 271(b) or (c), there must be direct infringement under 35 U.S.C. § 271(a). It is Section 271(a) that provides a "statutory remedy for infringement of valid patents." Section 271(b) addresses much narrower conduct, specifically when a party knowingly induces another to directly infringe a valid patent.

Thus, there is no "weakening of patentees' rights," because the patent owner has its remedy against the direct infringer through Section 271(a). The fact that it might be cheaper or easier to seek compensation from an alleged inducer rather than the direct infringer does not justify expanding the definition of actionable conduct under Section 271(b). Regardless of the disposition of this case, all patent owners will continue to have a remedy under 35 U.S.C. § 271(a) against the direct infringer of a valid patent. Section 271(b) provides a supplemental remedy in the limited situation where a party intentionally induces direct infringement. But by

definition, in order for there to be liability under Section 271(b), there must be a direct infringer. If Commil cannot establish the existence of a direct infringer under 35 U.S.C. § 271(a), then no harm can result from preventing it from dragging third parties into court.

D. Expanding Liability Under 35 U.S.C. § 271(b) Would Embolden Patent Assertion Entities

This case is important to the thousands of businesses that are the targets of patent assertion entities ("PAEs"), also called patent monetization entities ("PMEs"). PAEs are companies whose business is licensing and enforcing patents, typically using purchased patents. PAEs cost the U.S. economy billions of dollars per year, targeting businesses of all sizes and in a wide variety of industries.

The PAE business model relies on the difficulty of proving patents invalid. PAEs are profitable because accused infringers have a strong incentive to settle. It is extremely expensive to defend against a patent infringement claim, in large part because there are few ways to dismiss even a weak claim on the pleadings. Accordingly, nearly every such case will require discovery, which costs hundreds of thousands, or even millions of dollars. In 2012, the mean cost through the end of discovery for cases filed by PAEs worth less than $1 million was $516,000; for such cases with $1 to $10 million at risk, that figure was $998,000; and

for cases with $10 to $25 million at risk, the mean cost through the end of discovery was over $1.7 million.[6]

Inducement requires proving that the alleged inducer knew that the induced conduct would be patent infringement. Commil asks this Court to provide an easier path to imposing these staggering litigation expenses, namely that a simple notice letter would satisfy the intent prong of proving inducement.

Such notice letters would be ripe for abuse by PAEs. With the burden of proving intent essentially removed, PAEs will be free to target the deepest pockets in the supply chain irrespective of what the patent-in-suit actually covers.

In the current litigation system, PAEs already have enormous leverage to demand settlement. Giving them still more would make a bad situation much worse.

II. THE COURT SHOULD NOT UNDERMINE THE STANDARD FOR INTENTIONAL INDUCEMENT OF COPYRIGHT INFRINGEMENT ANNOUNCED IN *GROKSTER*

Regardless of how this Court resolves the question of the level of scienter required for active

---

[6] AIPLA, *Report of the Economic Survey 2013*, at I-145 (July 2013), *available at* http://www.aipla.org/members/Documents/AIPLA%202011%20Report-%20Summary%20102411.pdf.

inducement of *patent* infringement under 35 U.S.C. § 271(b), it should ensure that nothing in its decision lowers the level of scienter required for intentional inducement of *copyright* infringement. Unlike the Patent Act, which establishes a framework for secondary liability, the Copyright Act does not directly address secondary liability. Instead, secondary liability doctrines in the copyright context have been developed by the courts, often by importing concepts from the Patent Act. Most recently, this Court in *MGM Studios Inc. v. Grokster, Ltd.*, 545 U.S. 913, 936-37 (2005), viewed active inducement in 35 U.S.C. § 271(b) as a model for an inducement rule in copyright. Once the Court imported the basic concept of inducement from the Patent Act, it explored in great detail how the concept should apply in the copyright context. It also reconciled the inducement rule with its earlier decision concerning secondary copyright infringement, *Sony Corp. v. Universal City Studios, Inc.*, 464 U.S. 417 (1984).

The scienter standard articulated by the Federal Circuit in this case corresponds to the scienter standard in *Grokster*. As discussed below, *Grokster* required a showing of culpable intent to induce infringement of copyright before imposing liability for third party actions. The Federal Circuit's treatment of a good-faith belief of patent invalidity as a potential defense to inducement liability matches this culpable intent requirement.

Nevertheless, even if this Court concludes that *Grokster*'s culpable intent requirement should not

inform its interpretation of 35 U.S.C. § 271(b), and that mere notice of a patent's existence is sufficient scienter for purposes of Section 271(b), this Court should make clear that its ruling in this case in no way weakens the culpable intent requirement found by *Grokster* for inducement liability in the copyright context. The *Grokster* Court carefully calibrated the intentional inducement doctrine in copyright law to ensure that it "does nothing to compromise legitimate commerce or discourage innovation having a lawful promise." *Grokster*, 545 U.S. at 937. This Court should not allow that calibration to be undone.

A. *Grokster* Held That Intent to Induce Infringement Is Necessary for Contributory Copyright Infringement Liability

This Court held in *Grokster* that "[o]ne infringes contributorily by intentionally inducing or encouraging direct infringement." *Grokster*, 545 U.S. at 930. The Court clarified that mere knowledge that a person's actions would contribute to infringement was not sufficient to lead to contributory liability; the person had to intend for his actions to contribute to infringement. This clarification was necessary to resolve the growing tension in the lower courts between the traditional formulation of contributory copyright infringement and this Court's ruling in *Sony* that a device manufacturer was not liable for contributory infringement so long as his device was capable of substantial noninfringing uses.

Before *Grokster*, a contributory infringer was "one who, with *knowledge* of the infringing activity, induces, causes or materially contributes to the infringing conduct of another." *Gershwin Publishing Corp. v. Columbia Artists Management*, 443 F.2d 1159, 1162 (2d Cir. 1971) (emphasis supplied). The *Gershwin* formulation appeared to impose liability on a person who engaged in an activity that he knew contributed to infringement, even if that was not his intent. This is precisely the situation this Court addressed in *Sony*. Sony continued to distribute the Betamax device even though it knew that some users were likely to employ it to infringe. To avoid imposing liability on Sony, the Court imported the staple article of commerce doctrine from Section 271(c) of the Patent Act, and declared that the sale of copying equipment did not constitute contributory copyright infringement so long as the equipment was "merely . capable of substantial noninfringing uses." *Sony*, 464 U.S. at 442.

Lower courts viewed *Sony* as an exception to contributory infringement as formulated in *Gershwin*, but had difficulty applying *Sony* and *Gershwin* in a consistent manner to Internet-related products and services. *Compare, e.g., A&M Records v. Napster*, 239 F.3d 1004 (9th Cir. 2001) *with MGM Studios Inc. v. Grokster, Ltd.*, 380 F.3d 1154 (9th Cir. 2004), *rev'd*, 545 U.S. 913 (2005). In particular, courts struggled with how to apply the *Sony* rule when there was

evidence that the manufacturer or service provider intended to encourage infringement.[7]

This Court in *Grokster* resolved the confusion by clarifying that contributory copyright infringement requires a showing of intent to encourage infringement, rather than mere knowledge of the infringing activity. The *Grokster* Court explained how *Sony* fit into this formulation of contributory infringement: "*Sony* barred secondarily liability based on presuming or imputing intent to cause infringement solely from the design or distribution of a product capable of substantial lawful use, which the distributor knows is in fact used for infringement." *Grokster*, 545 U.S. at 933. Thus, although Sony *knew* that the Betamax could be used for infringing purposes, the *Sony* rule "limits imputing culpable intent as a matter of law from the characteristics or uses of a distributed product." *Id.* at 934. Since "[t]here was no evidence that Sony had expressed an object of bringing about taping in violation of copyright or had taken active steps to increase its profits from unlawful taping," *id.* at 931, and since such an unlawful objective could not

---

[7] This tension does not exist in the Patent Act because active inducement and contributory infringement (with its staple article of commerce doctrine) are separate causes of action codified separately at 35 U.S.C. §§ 271(b) and 271(c). As the Court explained in *Grokster*, "the Patent Act's exemption from liability for those who distribute a staple article of commerce, 35 U.S.C. § 271(c), [does not] extend to those who induce patent infringement, § 271(b)." *Grokster*, 545 U.S. at 935 n.10.

be presumed, Sony was not liable for contributory infringement.

In contrast, it appears that Grokster did intend for users to employ its software to infringe. And the *Grokster* Court explained that "nothing in *Sony* requires courts to ignore evidence of intent if there is such evidence," *id.* at 934, even if a product is capable of substantial noninfringing uses.

B. *Grokster* Required That Intent to Induce Infringement of Copyright Must Be Shown by Clear Expression or Affirmative Steps

This Court stated unambiguously in *Grokster* that knowledge of infringement was insufficient grounds for imputing intent to induce copyright infringement. Rather, intent to induce must be "shown by clear expression or other affirmative steps taken to foster infringement." *Grokster*, 545 U.S. at 919. The Court stressed that the clear expression or affirmative steps must be blatant: "[i]f liability for inducing infringement is ultimately found, it will not be on the basis of presuming or imputing fault, but from inferring a patently illegal objective from statements and actions showing what that objective was." *Id.* at 941. Similarly, the Court insisted on "unequivocal indications of unlawful purpose." *Id.* at 938. The Court emphasized that "mere knowledge of infringing potential or of actual infringing uses would not be enough here to subject a distributor to liability. Nor

would ordinary acts incident to product distribution, such as offering technical support or product updates, support liability in themselves." *Id.* at 937.[8]

The Court also refused to presume intent from a company's failure to take affirmative steps, such as filtering, to prevent infringement. The Court said, "[o]f course, in the absence of other evidence of intent, a court would be unable to find contributory infringement liability merely based on a failure to take affirmative steps to prevent infringement, if the device was otherwise capable of substantial noninfringing uses. Such a holding would tread too

---

[8] The language of the *Grokster* opinion suggests that liability should attach only if the defendant had the specific intent to cause infringement: "the object of promoting its use to infringe," *Grokster*, 545 U.S. at 919, "their principal object was use of their software to download copyrighted works," *id.* at 926, "an actual purpose to cause infringing use," *id.* at 934, "statements or actions directed to promoting infringement," *id.* at 935, "active steps taken to encourage direct infringement, such as advertising an infringing use or instructing how to engage in an infringing use, show an affirmative intent that the product be used to infringe," *id.* at 936, "purposeful, culpable expression and conduct," *id.* at 937, "active steps were taken with the purpose of bringing about infringing acts," *id.* at 938, "acted with a purpose to cause copyright violations," *id.*, "unequivocal indications of unlawful purpose," *id.*, "a principal, if not exclusive, intent on the part of each to bring about infringement," *id.* at 939, "intentional facilitation of their users' infringement," *id.*, "unlawful objective," *id.*, "the distributor intended and encouraged the product to be used to infringe," *id.* at 940 n.13, "a purpose to cause and profit from third-party acts of copyright infringement," *id.* at 941, and "patently illegal objective." *Id.*

closely to the *Sony* safe harbor." *Grokster*, 545 U.S. at 939 n.12.

Similarly, the Court did not presume intent based solely on a company's adoption of an advertising-based business model that could benefit from traffic stimulated by infringing material. The Court stated that "[t]his evidence alone would not justify an inference of unlawful intent. . ." *Id.* at 940.

In sum, the *Grokster* Court stated that the inducement rule "premises liability on purposeful, culpable expression and conduct, and thus does nothing to compromise legitimate commerce or discourage innovation having a lawful promise." *Id.* at 937.

C. Erosion of *Grokster* Would Threaten the Information Technology Industry

Application in the copyright context of the scienter standard advocated by Commil would harm the entire information technology industry. Digital technology has made copying ubiquitous. The digital video recorders on which we record television programs, the personal computers from which we upload content to and download content from the Internet, the mobile devices with which we take and send photographs – these result in the average American consumer making hundreds, if not thousands, of copies every day. The majority of these copies are noninfringing under theories such as fair use, 17 U.S.C. § 107, or implied license. But many of these

copies may infringe copyright owners' exclusive rights under 17 U.S.C. § 106. Many manufacturers of digital devices and providers of Internet services can expect that at some point at least one customer is likely to employ their devices or services to infringe copyright. What protects these manufacturers and service providers from ruinous secondary liability for infringing third party activities is this Court's rule in *Grokster* that intent to induce infringement must be shown by clear expression or affirmative steps, and would not be presumed from mere knowledge that the device or service was being used to infringe.

The *Grokster* Court acknowledged that when a device "is good for nothing else but infringement, there is no legitimate public interest in its unlicensed availability, and there is no injustice in presuming or imputing an intent to infringe." *Grokster*, 545 U.S. at 932-33 (internal citations and quotation marks omitted). At the same time, the *Grokster* inducement rule "absolves the equivocal conduct of selling an item with substantial lawful as well as unlawful uses, and limits liability to instances of more acute fault that the mere understanding that some of one's products will be misused." *Id.* In this manner, the rule "leaves breathing room for innovation and a vigorous commerce." *Id.*

Virtually all digital technologies have both lawful and unlawful uses. For this reason, imposing liability on device manufacturers and service providers based on the mere understanding that some of their products and services can be misused to infringe copyright

threatens the continuation of the Information Revolution. Yet this is exactly the standard Commil demands in the patent context. Regardless of what standard governs 35 U.S.C. § 271(b), the Court should make clear that this determination has absolutely no impact on the culpable intent standard articulated in *Grokster* for contributory copyright infringement liability. Failure to do so would upset the "sound balance between the respective values of supporting creative pursuits through copyright protection and promoting innovation in new communication technologies." *Grokster*, 545 U.S. at 928.

CONCLUSION

For the foregoing reasons, the Court should affirm the Federal Circuit.

Respectfully submitted,

MATTHEW LEVY
MATTHEW SCHRUERS
COMPUTER & COMMUNICATIONS INDUSTRY ASSOCIATION
900 17th Street NW,
Suite 1100
Washington, D.C. 20006
(202) 783-0070
mlevy@ccianet.org

JONATHAN BAND
Counsel of Record
JONATHAN BAND PLLC
21 Dupont Circle NW,
Suite 800
Washington, D.C. 20036
(202) 296-5675
jband@policybandwidth.com

Counsel for Amicus Curiae

February 26, 2015

AMICUS CURIAE BRIEF

Supreme Court, U.S.
FILED
FEB 2 6 2015
OFFICE OF THE CLERK

No. 13-896

In The
Supreme Court of the United States

COMMIL USA, LLC,

Petitioner,

v.

CISCO SYSTEMS, INC.,

Respondent.

On Writ Of Certiorari To The United States Court Of Appeals For The Federal Circuit

AMICUS CURIAE BRIEF OF DeLORME *ET AL.* IN SUPPORT OF RESPONDENT

PETER J. BRANN
(Counsel of Record)
DAVID SWETNAM-BURLAND
STACY O. STITHAM
BRANN & ISAACSON
184 Main St., P.O. Box 3070
Lewiston, Maine 04243-3070
(207) 786-3566
pbrann@brannlaw.com

Attorneys for Amici Curiae DeLorme et al.

COCKLE LEGAL BRIEFS (800) 225-6964
WWW.COCKLELEGALBRIEFS.COM

TABLE OF CONTENTS

Page

TABLE OF AUTHORITIES ii

INTEREST OF *AMICI CURIAE* 1

SUMMARY OF ARGUMENT 7

ARGUMENT 9

I. A GOOD-FAITH DEFENSE TO INDUCED PATENT INFRINGEMENT IS LEGALLY REQUIRED 9

A. The Court Should Simply Apply *Global-Tech* 9

B. The Court Should Not Adopt A Patent-Only Scienter Rule 14

II. THE GOOD-FAITH DEFENSE TO INDUCED PATENT INFRINGEMENT IS NECESSARY AND WORKABLE 19

CONCLUSION 23

TABLE OF AUTHORITIES

Page

CASES

Aro Mfg. Co. v. Convertible Top Replacement Co., 365 U.S. 336 (1961) 9, 12

Aro Mfg. Co. v. Convertible Top Replacement Co., 377 U.S. 476 (1964) 10

Certain Two-Way Global Satellite Communication Devices, System and Components Thereof, Inv. No. 337-TA-854 (ITC July 1, 2014) 3

Cheek v. United States, 498 U.S. 192 (1991) 22

Commil USA, LLC v. Cisco Sys., Inc., 720 F.3d 1361 (Fed. Cir. 2013), *cert. granted*, 135 S. Ct. 752 (2014) ..... *passim*

DeLorme Publ'g Co., Inc. v. BriarTek IP, Inc., 2014 WL 6603988 (E.D. Va. Nov. 19, 2014) 3

eBay, Inc. v. MercExchange, L.L.C., 547 U.S. 388 (2006) 14

FTC v. A.E. Staley Mfg. Co., 324 U.S. 746 (1945) 17

Global-Tech Appliances, Inc. v. SEB S.A., 131 S. Ct. 2060 (2011) ..... *passim*

Harlow v. Fitzgerald, 457 U.S. 800 (1982) 16

Lane v. Franks, 134 S. Ct. 2369 (2014) 17

Limelight Networks, Inc. v. Akamai Techs., Inc., 134 S. Ct. 2111 (2014) 9, 14

Luckey v. Baxter Healthcare Corp., 183 F.3d 730 (7th Cir. 1999) 16

TABLE OF AUTHORITIES – Continued

Page

Medtronic, Inc. v. Mirowski Family Ventures, LLC, 134 S. Ct. 843 (2014) 14

Octane Fitness, LLC v. ICON Health & Fitness, Inc., 134 S. Ct. 1749 (2014).....14

Peters v. Active Mfg. Co., 129 U.S. 530 (1889).....20

Sebelius v. Cloer, 133 S. Ct. 1886 (2013) 17, 18, 22

Soverain Software LLC v. Newegg Inc., 705 F.3d 1333 (Fed. Cir. 2013), *amended on reh'g*, 728 F.3d 1332 (Fed. Cir. 2013), *cert. denied*, 134 S. Ct. 910 (2014).....4

Soverain Software LLC v. Newegg Inc., 836 F. Supp. 2d 462 (E.D. Tex. 2010) 4

Teva Pharm. USA, Inc. v. Sandoz, Inc., 135 S. Ct. 831 (2015).....14

United States ex rel. Hagood v. Sonoma Cnty. Water Agency, 929 F.2d 1416 (9th Cir. 1991).....15, 16

United States v. Leon, 468 U.S. 897 (1984) 21

United States v. Prabhu, 442 F. Supp. 2d 1008 (D. Nev. 2006).....16

United States v. United States Gypsum Co., 438 U.S. 422 (1978).....17, 21

Warner-Jenkinson Co., Inc. v. Hilton Davis Chem. Co., 520 U.S. 17 (1997).....11

TABLE OF AUTHORITIES – Continued

Page

STATUTES

31 U.S.C. § 3729(b) 15

35 U.S.C. § 271(a) 9

35 U.S.C. § 271(b) 9, 10, 11, 12, 13

35 U.S.C. § 271(c) 10

42 U.S.C. § 1983 21

RULES

S. Ct. R. 37.3(a) 1

S. Ct. R. 37.6 1

OTHER AUTHORITIES

Am. Intell. Prop. Ass'n, *Report of the Economic Survey* (2011) 19

INTEREST OF *AMICI CURIAE*

Amici Curiae DeLorme Publishing Company, Inc., Crutchfield Corporation, Hasbro, Inc., L Brands, Inc., L. L. Bean, Inc., Newegg, Inc., Parke-Bell, Ltd. d/b/a Touch of Class Catalog, and the Retail Litigation Center (collectively, "*Amici*") submit this brief in support of Respondent.*

Amici are a diverse collection of companies and retail organizations of different sizes from different locations throughout the country engaged in different businesses. They range from a small provider of mapping, satellite communication, and GPS products based in Maine (DeLorme), to one of America's leading web-only retailers based in California (Newegg). They join this brief because they (or some of their members) have faced, and fought, claims that they are inducing their customers to infringe patent claims – usually by doing no more than providing explanations on how to use their products or websites – even when they have been found not to infringe directly the asserted patents. Eliminating a good-faith defense to induced infringement would expose businesses such as *Amici* to liability for the conduct of their customers or visitors to their websites and the attendant costs of defending against such patent claims

---

* In accordance with S. Ct. R. 37.3(a), all parties have consented to the filing of this brief. Pursuant to S. Ct. R. 37.6, counsel for *Amici* state that no counsel for a party authored this brief in whole or in part, and no person or entity other than *Amici* or their counsel made a monetary contribution to the preparation or submission of this brief.

in contexts where they believed in good faith that the conduct they were accused of inducing was not wrongful. In order to be cleared of the accusation of actively inducing infringement by a third party of a patent claim they had every reason to believe was invalid, *Amici* would have to prove after discovery and perhaps a trial and an appeal that the asserted patents were, in fact, invalid. Failing that, they could be found to have knowingly induced patent infringement despite not having known at the time that they were inducing patent infringement.

Two examples in which the rule at issue in this case was not applied illustrate the practical problems businesses face when accused of inducing infringement by their customers or website visitors. The first example shows how the refusal to consider evidence tending to negate scienter can lead to a finding of infringement in one forum even of patent claims found invalid in another. A company called BriarTek IP, Inc. filed a complaint with the International Trade Commission ("ITC"), accusing DeLorme of infringing its patent relating to two-way satellite communications. Because DeLorme no longer imported the products previously accused of infringement, it proposed and the ITC approved a consent order under which DeLorme agreed that it would no longer import devices, systems, or components that infringed the asserted patent. BriarTek immediately filed an ITC enforcement complaint, alleging that DeLorme was violating the consent order. Because DeLorme was prohibited from challenging the validity of the patent

in the ITC enforcement action, it filed a declaratory judgment action in the Eastern District of Virginia, alleging noninfringement and invalidity.

The ITC found that DeLorme did not directly infringe the patent, but, refusing even to consider DeLorme's good-faith belief in the invalidity of the asserted patent, found that DeLorme had induced infringement by instructing its customers how to use its products, and imposed a $6.2 million penalty. *Certain Two-Way Global Satellite Communication Devices, System and Components Thereof*, Inv. No. 337-TA-854 (ITC July 1, 2014) (appeal pending). Later, the district court invalidated the asserted patent for anticipation and obviousness on summary judgment. *DeLorme Publ'g Co., Inc. v. BriarTek IP, Inc.*, 2014 WL 6603988 (E.D. Va. Nov. 19, 2014) (appeal pending). For present purposes, it is sufficient to note that a small Maine company has spent a fortune litigating induced infringement claims in a case in which it not only had a good-faith belief that the asserted patent was invalid, but a district court eventually confirmed that good-faith belief by invalidating the asserted patent on multiple grounds. This is an instructive example, one in which an accused inducer was found liable for its customer's conduct in the ITC despite its reasonable belief in the invalidity of the patent's claims, a reasonable belief later vindicated by a district court judgment.

The second example, decided before *Commil USA, LLC v. Cisco Sys., Inc.*, 720 F.3d 1361 (Fed. Cir. 2013), *cert. granted*, 135 S. Ct. 752 (2014), highlights the

unavoidable connection between a patent-asserter's infringement theory and an accused inducer's reasonable beliefs regarding the validity of the asserted patent claim. Soverain Software accused Newegg's website of infringing two patents, one of which Soverain claimed covered Newegg's online "shopping cart." A jury found that Newegg did not directly infringe either patent, but had induced customers visiting the Newegg website to infringe both patents. *Soverain Software LLC v. Newegg Inc.*, 836 F. Supp. 2d 462, 468 (E.D. Tex. 2010). The jury further concluded that the asserted claims were not invalid, and awarded $2.5 million in damages. *Id.* On appeal, the Federal Circuit concluded that the asserted patent claims were invalid for obviousness. *See Soverain Software LLC v. Newegg Inc.*, 705 F.3d 1333 (Fed. Cir. 2013), *amended on reh'g*, 728 F.3d 1332 (Fed. Cir. 2013), *cert. denied*, 134 S. Ct. 910 (2014). In its opinion reversing the district court judgment of validity, the Federal Circuit aptly described Newegg's position regarding Soverain's assertion of its patents: "Newegg declined to pay for a license, stating that its system is materially different from that described and claimed in the patents, and that the patents are invalid *if given the scope asserted by Soverain*." *Id.* at 1336 (emphasis added).

That is, Newegg believed that for Soverain to accuse Newegg of inducing infringement of its patents' claims Soverain had to interpret those claims so broadly as to render them invalid. That belief alone, if proven to have been reasonably held in good faith,

should have ended the matter because it would have negated the knowledge element of the induced infringement claim for which Newegg was found liable. Instead, Newegg could only extricate itself from liability for its website-users' conduct by litigating at enormous expense through trial and appeal the invalidity of the asserted patents. Had the district court been in a position to apply the rule that Newegg's good-faith belief in invalidity could negate the knowledge element of the induced infringement claim, Newegg would not have faced a $2.5 million judgment that it had knowingly induced its website visitors to infringe patent claims which, read against, *e.g.*, the accused "shopping cart," Newegg reasonably believed to be invalid.

These examples, in which the rule announced in *Commil* either did not apply or was not applied, serve to highlight the direct and salient interest of *Amici* in the outcome of this case. *First*, they exemplify the prevalence of induced infringement allegations. Patent-asserters seek to reach the deeper pockets of businesses that sell products by attributing liability to them based on the conduct of their customers even when they cannot prove direct infringement by the companies themselves. Since the alleged inducement is usually little more than a form manual or instructional guide on how to use the businesses' products or websites, these are easy allegations to make.

Second, these examples demonstrate the push-me-pull-you relationship of theories of infringement and invalidity. For businesses accused of patent infringement,

the question of infringement cannot be readily separated from invalidity. On the one hand, the business may read the language of the patent and conclude, "We don't do that," *i.e.*, the business does not infringe the patent. On the other hand, the patent-asserter may contend that the patent claims should be read much more broadly to cover the business's products or website, in which case the business may conclude, "The claimed technology (or process) existed years before this patent," *i.e.*, the patent is invalid. Infringement and invalidity are inextricably intertwined.

As demonstrated by the diametrically opposed outcomes against DeLorme in the ITC and in favor of DeLorme in the district court, divorcing infringement and invalidity in the artificial manner suggested by the Petitioner and the Government warps the analysis. An interpretation of a patent under which an accused inducer may be found to infringe may well be an interpretation that would likely render those same claims invalid because it defines them so broadly as to encompass the prior art. All of which is to say that there is a real and present need in patent law for continuing the rule that allows an accused infringer to negate the scienter element of induced infringement through sufficient evidence of its reasonable, good-faith belief that the asserted patent is invalid.

SUMMARY OF ARGUMENT

The argument of *Amici* can be simply put. Courts should treat the good-faith defense to the knowledge element of induced infringement just as it would treat a good-faith defense in any other area of law. This Court has, in recent years, chided the Federal Circuit for adopting and applying special rules in patent cases for policy reasons. The adoption of new rules in patent cases is the role of Congress. This case presents the reverse face of the same coin. Here, the Federal Circuit correctly interpreted the scienter element of induced infringement to allow for a good-faith defense, just as any federal court would interpret an analogous provision of federal law in any other case, such as false claims, civil rights, antitrust, etc. Thus, an accused infringer should be able to negate the knowledge requirement of induced infringement by showing that it had a reasonable, good-faith belief that it was *not* inducing direct infringement of a patent claim because that claim was invalid. To deny accused inducers that defense is to erase the scienter requirement from the statute, implicitly reversing the holding of *Global-Tech Appliances, Inc. v. SEB S.A.*, 131 S. Ct. 2060 (2011).

Not only is this rule legally correct, it is practically important. As the examples above demonstrate, businesses such as *Amici* are routinely accused of inducing their customers to infringe patents by informing their customers how to use their products or websites. Faced with such accusations, businesses must be able to investigate those claims and conclude

that if the patent claims are as broad as asserted, then the patent must be invalid because the claimed technology existed years or even decades prior to the filing of the patent. Businesses should not be required to license invalid patents, to file expensive patent litigation, or to shut down operations when faced with allegations that someone claims a patent over two-way satellite communications or shopping carts. There must be play in the joints for an accused inducer to conclude reasonably that it is *not* inducing infringement because the asserted patent is invalid.

The acknowledgement of such a defense does not mean the end of induced infringement liability. The fears expressed by the Petitioner, the Government, and others that the Federal Circuit's opinion is a get-out-of-jail-free card for accused inducers are ill-founded. The defense only arises in that fraction of cases in which all the other elements of induced infringement have already been established. It only arises in the still narrower fraction of cases in which the patent claims that the accused infringer believes are *in*valid are adjudged to be *valid* – that is, where the question for decision is whether the accused infringer's *incorrect* belief is nonetheless reasonable and in good faith. In that quite limited class of cases, federal district judges are fully equipped to make, and are capable of making that determination, just as they do in other areas of the law where a good-faith belief can negate scienter.

Although patent litigation deals with technical subject matter, district courts are well equipped to

adjudicate a good-faith defense in the context of patent law just as they do in other areas of the law in which evidence of good faith can negate scienter. An accused inducer's reasonable, good-faith belief that a patent claim asserted against it is invalid can, if demonstrated, negate the scienter element of a claim of induced infringement because it can show that the accused infringer did not *know* that it was inducing a third party directly to infringe a patent claim. The judgment below should be affirmed.

ARGUMENT

I. A GOOD-FAITH DEFENSE TO INDUCED PATENT INFRINGEMENT IS LEGALLY REQUIRED.

A. The Court Should Simply Apply *Global-Tech*.

In order to show induced infringement under 35 U.S.C. § 271(b), a patent-asserter must first prove that some non-party directly infringed the asserted patent claim under 35 U.S.C. § 271(a). *See Limelight Networks, Inc. v. Akamai Techs., Inc.*, 134 S. Ct. 2111, 2117 (2014) (citing *Aro Mfg. Co. v. Convertible Top Replacement Co.*, 365 U.S. 336, 341 (1961)). If direct infringement is proven, then the patent-asserter must further prove that the accused inducer actively induced the direct infringement. *See also* Gov't Br. at 19 (elements of induced infringement).

Inferring a requirement of intent from Congress' use of the term "induces," this Court has "h[e]ld[ ] that induced infringement under § 271(b) requires knowledge that the induced acts constitute *patent infringement*." *Global-Tech*, 131 S. Ct. at 2068 (brackets and emphasis added); *see also id.* at 2065 ("Although the text of § 271(b) makes no mention of intent, we infer that at least some intent is required."). The Court found that the result in *Global-Tech* could be reached by reference to the Court's opinion in *Aro Mfg. Co. v. Convertible Top Replacement Co.*, 377 U.S. 476 (1964) ("*Aro II*"), in which the Court "held that a violator of § 271(c) must know 'that the combination for which his component was especially designed was both patented and infringing.'" *Global-Tech*, 131 S. Ct. at 2067 (quoting *Aro II*, 377 U.S. at 488). "[T]his same knowledge" – that the acts induced are both patented and infringing – is required "for liability under § 271(b)." *Id.* at 2067 (brackets added).

The challenged holding below was a straightforward application of this Court's holding that to prove inducement, a patent-asserter must show that the accused inducer knew "that the induced acts constitute patent infringement." *Id.* at 2068. Once made aware of a patent and an allegation of infringement, an accused inducer can choose *not* to investigate that claim, courting a finding of willful blindness.

Alternatively, the accused inducer can examine the asserted claims and compare them with the accused instrumentality, *e.g.*, a product it sells or the

retail website it uses to sell products. At that point, the accused inducer can come to believe that in all probability the use of the accused instrumentality meets the elements of an asserted claim as properly construed. Or, the accused inducer can conclude that in all probability the use of the accused instrumentality is *not* infringing for one of two reasons. *First*, the accused inducer can conclude that the instrumentality does *not* meet all elements of the asserted claims under the proper interpretation of those claims; or, *second*, the accused inducer can conclude that the instrumentality does not infringe because the asserted claims *as read against that very accused instrumentality* cannot be valid.

As the court below concluded, evidence tending to show a good-faith belief of non-infringement or invalidity on the part of the accused inducer "is relevant evidence that tends to show that an accused inducer lacked the intent required to be held liable for induced infringement." *Commil*, 720 F.3d at 1367-68. It is equally true that one cannot be held liable "as an infringer," 35 U.S.C. § 271(b), for inducing use of an accused instrumentality if that instrumentality does not meet all of the patent claim's elements as it is to say that one cannot be held liable for inducing infringement of a claim that, applied to that accused instrumentality, is invalid. *See Commil*, 720 F.3d at 1368 ("It is axiomatic that one cannot infringe an invalid patent."); *see also Warner-Jenkinson Co., Inc. v. Hilton Davis Chem. Co.*, 520 U.S. 17, 29 (1997) ("Each element contained in a patent claim is deemed

material to defining the scope of the patented invention."); *Aro*, 365 U.S. at 604 ("If anything is settled in the patent law, it is that the combination patent covers only the totality of the elements in the claim and that no element, separately viewed, is within the grant.").

In essence, the Petitioner and the Government are asking the Court to rewrite the holding of *Global-Tech* to substitute the good-faith belief of the patent-asserter for the good-faith belief of the accused infringer. *See* Gov't Br. at 17 ("Under that interpretation, a *patentee* can provide the potential inducer with the requisite knowledge by notifying him about the patent and the allegation of infringement.") (emphasis added); *see also id.* at 6 ("This Court's decisions indicate that a patentee may establish the scienter required by Section 271(b) by proving that the inducer was aware of the patent and of *the patentee's view* that the induced conduct was infringing.") (emphasis added); 9 (similar). In the words of the Petitioner, "Commil . contends that once the inducer has knowledge of the patent and its potential relevance to its conduct vis-à-vis infringement (*e.g.*, through discussion with the patent owner, a notice letter from the patentee, reading public materials, or internal review), the intent requirement is satisfied." Pet. Br. at 16 (ellipsis added). That is, the Petitioner and Government contend that when this Court said, "[W]e now hold that induced infringement under § 271(b) requires knowledge that the

induced acts constitute patent infringement," *Global-Tech*, 131 S. Ct. at 2068 (brackets added), what the Court really meant was, "We now hold that induced infringement under § 271(b) requires knowledge that *the patent-asserter believes* that the induced acts constitute patent infringement."

Not only is that not what the Court said, it does not make sense to interpret Section 271(b) as including a knowledge requirement that may be satisfied not by proof of what the accused inducer knew, but rather by evidence of what the patent-asserter said. On this theory, "[o]nce the inducer knows about the patent and the patentee's view of its scope, he can order his conduct accordingly, *e.g.*, by modifying his product, maintaining his present course, or (if an actual controversy exists) seeking a judicial ruling to clarify his rights." Gov't Br. at 17 (brackets added and citation omitted). But this answer begs the question. This is the menu of options available to the accused inducer whatever scienter rule applies. The real issue is, if the accused infringer "knows about the patent and the patentee's view of its scope," and believes in good faith that the patentee's view of the scope is *wrong*, the accused infringer lacks the requisite scienter to induce anyone to infringe a valid patent.

If adopted, the position advocated by the Petitioner and the Government would eliminate the requirement of *Global-Tech* that an accused inducer must know that the actions it is inducing are patented *and*

infringing. The Government concedes as much when it argues that the *only* way for an accused inducer on notice of the existence of a patent to escape liability is to prove non-infringement or invalidity. *See* Gov't Br. at 17-18. That view leaves no room for a good-faith, but ultimately incorrect, belief on the part of the accused infringer to negate the knowledge requirement. Put another way, that view leaves no room for a scienter element of induced infringement that could ever change the outcome. According to the Petitioner and the Government, the only way for an accused inducer to negate the knowledge element is to prove that it did not know about the patent or that it had been accused of infringing it. *Global-Tech*'s holding was written, according to this view, in disappearing ink.

B. The Court Should Not Adopt A Patent-Only Scienter Rule.

In recent years, this Court has chided the Federal Circuit for adopting and applying special rules in patent cases for policy reasons. *See, e.g.*, *Teva Pharm. USA, Inc. v. Sandoz, Inc.*, 135 S. Ct. 831 (2015) (fact-finding incident to claim construction); *Limelight*, 134 S. Ct. 2111 (induced infringement of method patent claims); *Medtronic, Inc. v. Mirowski Family Ventures, LLC*, 134 S. Ct. 843 (2014) (declaratory judgment jurisdiction); *Octane Fitness, LLC v. ICON Health & Fitness, Inc.*, 134 S. Ct. 1749 (2014) (fee awards); *eBay, Inc. v. MercExchange, L.L.C.*, 547 U.S. 388 (2006) (injunctive relief). Here, the Federal Circuit

has followed that directive and interpreted the scienter element of induced infringement to allow an accused inducer to negate the knowledge requirement by showing that it had a reasonable, good-faith belief that it was *not* inducing direct infringement of a patent claim because that claim was invalid. Rather than acknowledging the propriety of this conclusion, however, the Petitioner and the Government are asking the Court to write a patent-only rule for scienter, namely, knowledge of infringement really means just knowledge that a patent exists and one has been accused of infringing it. It is for Congress, not the courts, to make new policy.

The peculiarity of the Petitioner and the Government's position becomes apparent when compared to similar good-faith defenses in other areas of federal law. Federal law routinely recognizes a defendant's legitimate, good-faith belief in the lawfulness of his or her conduct as evidence that can negate a finding of knowledge.

The False Claims Act, for example, creates liability for the knowing submission of false claims to the Government. *See* 31 U.S.C. § 3729(b). Under the False Claims Act, that knowledge may be established by evidence of actual knowledge, deliberate ignorance, or reckless disregard; specific intent to defraud need not be demonstrated. *See id.* "The requisite intent is the knowing presentation of what is known to be false." *United States ex rel. Hagood v. Sonoma Cnty. Water Agency*, 929 F.2d 1416, 1421 (9th Cir. 1991). A common issue that arises, then, is whether a

defendant's statements to the Government are false or fraudulent if they are based on a reasonable interpretation of a disputed legal or regulatory issue. In the false claims context, for a defendant to take a reasonable position on a disputed legal issue "is to be neither deliberately ignorant nor recklessly disregardful." *Id.*; *see also Luckey v. Baxter Healthcare Corp.*, 183 F.3d 730, 732 (7th Cir. 1999) (statement consistent with decision based on reasonable interpretation of ambiguous regulation not knowingly false or fraudulent); *United States v. Prabhu*, 442 F. Supp. 2d 1008, 1029 (D. Nev. 2006) (no false claims because defendant believed in "good faith" that billing practice conformed to a reasonable interpretation of ambiguous regulations). It is the defendant's good faith, not the relator's assertion, that determines whether the defendant knowingly submitted a false claim.

In similar fashion, "good faith" or qualified immunity is a recognized defense for public officials against charges of misconduct in the performance of discretionary duties. *See, e.g., Harlow v. Fitzgerald*, 457 U.S. 800, 815 (1982). In this area of the law, the Court recognizes a distinction between clearly established obligations, which may not be violated, and legal developments "an official could not reasonably be expected to anticipate." *Id.* at 818. "[G]overnment officials performing discretionary functions generally are shielded from liability for civil damages insofar as their conduct does not violate clearly established statutory or constitutional rights of which a reasonable person would have known." *Id.* (brackets added).

Indeed, the Court evaluates the good faith of the government official at the time of the alleged offense, and not later after a subsequent change in the law. *See, e.g., Lane v. Franks*, 134 S. Ct. 2369, 2381 (2014). Thus, a government official's good-faith, but ultimately incorrect, belief is sufficient to protect him or her from damages liability if the conduct does not violate clearly established law.

In cases interpreting the Clayton Act, this Court has noted that a person charged with price discrimination can rebut that charge with evidence that the price was made in good faith to meet a competitor's price. *See FTC v. A.E. Staley Mfg. Co.*, 324 U.S. 746, 752 (1945). The seller need not prove that it met a competitor's price *in fact*, but rather that the price was determined in good faith to meet a competitor's. *Id.* at 759; *see also United States v. United States Gypsum Co.*, 438 U.S. 422, 453 (1978) ("A good-faith belief, rather than absolute certainty, that a price concession is being offered to meet an equally low price offered by a competitor is sufficient to satisfy the § 2(b) defense.").

In interpreting the National Childhood Vaccine Injury Act of 1986 ("Vaccine Act"), the Court has held that even a petition for compensation filed untimely "may qualify for an award of attorney's fees if it is filed in good faith and there is a reasonable basis for its claim." *Sebelius v. Cloer*, 133 S. Ct. 1886, 1896-97 (2013). That result followed from the law's provision that "so long as such a petition was brought in good faith and with a reasonable basis, it is eligible for an

award of attorney's fees, even if it is ultimately unsuccessful." *Id.* at 1893.

The specific lessons of the foregoing case-law apply here. *First*, the good-faith belief of a defendant – here, the accused inducer – can negate a finding of knowledge. It is the *defendant's* knowledge that is tested, not what the plaintiff may have told the defendant. *Second*, the good-faith belief need not turn out to be accurate to have been made in good faith. *Third*, the accused inducer's belief must be measured based on the information available to the accused inducer at the time it made the decision to engage in the allegedly unlawful conduct.

The more general lesson to be learned is that federal law recognizes a good-faith belief as a defense in a wide range of legal areas, and applies a (relatively) uniform approach to its application in those areas. The Petitioner and the Government point to no reason – other than the fact that patent law is different and hard – for this Court to create a special scienter rule for the Patent Act, not found in the statute enacted by Congress. Whether adjudication of a good faith defense in patent law is more complicated than antitrust, civil rights, false claims, and any number of other areas of law that recognize a good-faith defense is scarcely self-evident. The Court should resist the invitation of the Petitioner and the Government to create a *sui generis* rule for the knowledge element of induced infringement.

II. THE GOOD-FAITH DEFENSE TO INDUCED PATENT INFRINGEMENT IS NECESSARY AND WORKABLE.

Not only is the rule announced by the Federal Circuit below legally correct, it is practically important. For businesses such as *Amici*, which are routinely accused of inducing their customers to infringe patents, such claims put them in a practical quandary. If the asserted patent claims are truly as broad as asserted, say, that BriarTek invented two-way satellite communication or that Soverain Software invented the online shopping cart, then the *Amici* could – and should – resist paying for a license because such a patent could not possibly be valid. But, if the good-faith defense to induced infringement is effectively eliminated, the only avenue available to avoid paying that toll is to litigate to the bitter end the validity of the asserted patents. *See* Resp. Br. at 32-33. Since the cost of litigating the validity of a patent through trial and appeal is routinely calculated in the millions, the rational response to such an induced infringement claim is to take a cost-of-litigation settlement. *See* Am. Intell. Prop. Ass'n, *Report of the Economic Survey* (2011) (cost of patent litigation ranges from $350,000 to reach the end of discovery and $650,000 to fully complete litigation when less than $1,000,000 is at risk, to $3,000,000 to reach the end of discovery and $5,000,000 to fully complete litigation when more than $25,000,000 is at risk); *see also* Resp. Br. at 51-52.

The Petitioner counters that "even if 'good-faith beliefs' were relevant to the analysis, validity is distinct from infringement, and hence beliefs about validity are irrelevant to whether the defendant induced infringement." Pet. Br. at 3. In similar mode, the Government asserts, that infringement and invalidity are separate issues that present "independent questions," such that "a patent can be infringed whether or not it is ultimately held to be valid." Gov't Br. at 23. Saying that a patent claim is both infringed and invalid is another way of saying that the direct infringer – the person being induced to infringe – is practicing the prior art. Suffice it to say, a rule that allows a claim of induced infringement of an invalid patent makes no sense.

Amici do not operate their businesses in the abstract world imagined by the Petitioner and the Government. Infringement and invalidity are intermeshed in the real world – the scope of a *valid* patent claim is delimited by the *invalidating* prior art. This Court has recognized since the nineteenth century the deep connection between non-infringement and invalidity, defining anticipation as preemptive infringement. "That which infringes, if later, would anticipate, if earlier." *Peters v. Active Mfg. Co.*, 129 U.S. 530, 537 (1889). And this is the real rub for accused inducers, who do not face claims of infringement in a vacuum, but rather concrete claims that their product or their website is being used by their customers to infringe the patent-asserter's patent claims. They face a Hobson's choice – do they act on

their belief that the asserted patent is invalid, and incur the cost and uncertainty of litigating that issue, or do they succumb and pay for a license for a patent they believe in good faith to be invalid?

The Petitioner and the Government further suggest that the Court must create a new law of scienter because the rule adopted by the Federal Circuit will "encourage defendants to seek self-serving opinions of counsel in hopes of fabricating a defense to infringement." Pet. Br. at 3. They caution that "the complexity of patent litigation" will allow accused infringers to throw sand in the eyes of a jury and trial judge because it will become "difficult for patentees to prove that subjective beliefs about defenses were not held in good faith." *Id.* at 14. Neither this Court nor litigants need fear that federal judges and juries will be incapable of separating wheat from chaff in applying this element of the patent-asserter's proof of induced infringement.

The Court has recognized that district courts "have considerable discretion in conforming their decisionmaking processes to the exigencies of particular cases." *United States v. Leon*, 468 U.S. 897, 924-25 (1984) (collecting cases addressing questions of good-faith immunity under 42 U.S.C. § 1983). "Given the fact-specific nature of the inquiry, it is difficult to predict all the factors the court would consider in appraising . good faith." *United States Gypsum*, 438 U.S. at 454-55 (ellipses added). The district courts charged with overseeing patent actions should be permitted to use the tools at their disposal to do so.

Moreover, the Court has observed that, although a defendant must be allowed to put on a good-faith defense, not all good-faith defenses are good defenses. As the Court wrote of the losing argument that the defendant nonetheless had the right to make in a tax case: "Of course, the more unreasonable the asserted beliefs or misunderstandings are, the more likely the jury will consider them to be nothing more than simple disagreement with known legal duties imposed by the tax laws and will find that the Government has carried its burden of proving knowledge." *Cheek v. United States*, 498 U.S. 192, 203-204 (1991) (holding that it was error to instruct jury to disregard evidence of taxpayer's belief that he was not a person required to file a tax return or pay income taxes).

This Court recently addressed the argument advanced by the Government in the Vaccine Act attorneys' fees case that a more permissive rule regarding fee awards would lead to more untimely petitions being filed. The Court's response there is apt here:

> [T]he Government offers no evidence to support its speculation. Additionally, this argument is premised on the assumption that in the pursuit of fees, attorneys will choose to bring claims lacking good faith or a reasonable basis in derogation of their ethical duties. There is no basis for such an assumption. Finally, the special masters have shown themselves more than capable of discerning untimely claims supported by good faith and a reasonable basis from those that are specious.

Cloer, 133 S. Ct. at 1896 (brackets added).

If there is an argument to be made that the federal judiciary is not well-equipped to handle induced infringement claims because the subject matter is technical and abstruse, proponents of that argument can and will make it to Congress. Neither the Petitioner nor the Government, however, has explained why this Court should adopt a special scienter rule for induced patent infringement, rather than allowing the federal judiciary to treat the good-faith defense to the knowledge element of induced infringement just as it would treat a good-faith defense in any other legal field.

CONCLUSION

Amici Curiae respectfully submit that the Court should affirm the judgment of the Federal Circuit.

Respectfully submitted,

PETER J. BRANN
(*Counsel of Record*)
DAVID SWETNAM-BURLAND
STACY O. STITHAM
BRANN & ISAACSON
184 Main St., P.O. Box 3070
Lewiston, Maine 04243-3070
(207) 786-3566

Attorneys for Amici Curiae DeLorme et al.

February 26, 2015

AMICUS CURIAE BRIEF

No. 13-896

Supreme Court, U.S.
FILED
FEB 26 2015
OFFICE OF THE CLERK

IN THE

Supreme Court of the United States

COMMIL USA, LLC,

Petitioner,

v.

CISCO SYSTEMS, INC.,

Respondent.

ON WRIT OF CERTIORARI TO THE UNITED STATES COURT OF APPEALS FOR THE FEDERAL CIRCUIT

BRIEF OF ELECTRONIC FRONTIER FOUNDATION AS *AMICUS CURIAE* IN SUPPORT OF RESPONDENT

VERA RANIERI
Counsel of Record
DANIEL K. NAZER
MICHAEL BARCLAY
ELECTRONIC FRONTIER FOUNDATION
815 Eddy Street
San Francisco, CA 94109
(415) 436-9333
vera@eff.org

Attorneys for Amicus Curiae Electronic Frontier Foundation

February 26, 2015

258116

COUNSEL PRESS
(800) 274-3321 • (800) 359-6859

TABLE OF CONTENTS

Page

TABLE OF CONTENTS i

TABLE OF CITED AUTHORITIES iv

STATEMENT OF IDENTITY AND INTEREST OF *AMICUS CURIAE* 1

INTRODUCTION AND SUMMARY OF ARGUMENT 2

ARGUMENT 3

I. The Statutory Framework of Indirect Infringement Requires a High Level of Intent to Cause Infringement for Inducement Liability 3

A. The Issue of Whether § 271 Requires Knowledge of the Infringing Nature of the Accused Acts Is Not Properly Before the Court 4

B. Recognizing Inducement Liability Absent an Intent to Cause Infringement Would Ignore the Statutory Scheme 5

C. The Analogous Standard in Copyright Supports Requiring a Showing of Intent to Cause Infringement 9

Table of Contents

Page

II. Section 271(b) Requires a Showing of Intent to Cause the Violation of the Rights and Privileges of Another, Which May Be Negated by a Good-Faith, Mistaken Belief as to the Facts or Law.....14

A. Infringement Is the Violation of Rights; Absent Rights, There Can Be No Infringement.....14

B. The Rights of Patent Owners Are Defined by the Patent's Claims, Whose Construction Impacts Myriad Issues Relating to Infringement and Validity.....17

C. An Incorrect Belief as to the Scope of Patent Rights May Negate the Intent Requirement.....22

III. The Defense of a Good-Faith Belief that Patent Rights Are Not Being Violated Encourages Clearer Claims, Specifications, and Prosecution Histories.....24

A. A Defense Based on a Good-Faith Belief That The Induced Acts Are Not Protected By a Valid Patent Encourages Patent Owners to More Clearly Describe Their Inventions, to the Benefit of the Patent Office and the Public.....25

Table of Contents

Page

B. Given the Relative Positions of Patent Owners, the Patent Office, and Accused Inducers, the Risk of Unclear Claims is Appropriately Placed on the Patent Owner 27

CONCLUSION 30

TABLE OF CITED AUTHORITIES

Page

Cases

3M Innovative Props. Co. v. Tredegar Corp.,
725 F.3d 1315 (Fed. Cir. 2013) 20, 21, 27

Alice Corp. Pty. Ltd. v. CLS Bank Int'l,
134 S. Ct. 2347 (2014) 23

Auto. Techs. Int'l, Inc. v. BMW of N. Am., Inc.,
501 F.3d 1274 (Fed. Cir. 2007) 21

Broadcom Corp. v. Qualcomm, Inc.,
543 F.3d 683 (Fed. Cir. 2008) 9

Feist Publ'ns, Inc. v. Rural Tel. Serv. Co.,
499 U.S. 340 (1991) 16-17

Gen. Elec. Co. v. Wabash Appliance Corp.,
304 U.S. 364 (1938) 24

Global-Tech Appliances, Inc. v. SEB S.A.,
131 S. Ct. 2060 (2011) ..... *passim*

Grober v. Mako Prods., Inc.,
686 F.3d 1335 (Fed. Cir. 2012) 20

Halliburton Energy Servs., Inc. v. M-I LLC,
514 F.3d 1244 (Fed. Cir. 2008) 27

Lear, Inc. v. Adkins,
395 U.S. 653 (1969) 16

Cited Authorities

Page

Limelight Networks, Inc. v. Akamai Techs., Inc.,
134 S. Ct. 2111 (2014) ..... *passim*

Lochner Techs., LLC v. Vizio, Inc.,
567 F. App'x 931 (Fed. Cir. 2014) 21

Mahurkar v. C.R. Bard, Inc.,
79 F.3d 1572 (Fed. Cir. 1996) 19, 20

Markman v. Westview Instruments, Inc.,
517 U.S. 370 (1996) 18

Metro-Goldwyn-Mayer Studios Inc. v.
Grokster, Ltd.,
545 U.S. 913 (2005)..... *passim*

Nautilus, Inc. v. Biosig Instruments, Inc.,
134 S. Ct. 2120 (2014)..... 23, 28

Oak Indus., Inc. v. Zenith Elecs. Corp.,
697 F. Supp. 988 (N.D. Ill. 1988).....8

Retractable Tech. Inc. v.
Becton, Dickinson & Co.,
653 F.3d 1296 (Fed. Cir. 2011) 29

Schering Corp. v. Geneva Pharms, Inc.,
339 F.3d 1373 (Fed. Cir. 2003) 19

Sony Corp. of Am. v.
Universal City Studios, Inc.,
464 U.S. 417 (1984).....10, 13

Cited Authorities

Page

Teva Pharms. USA Inc. v. Sandoz, Inc.,
135 S. Ct. 831 (2015) 18, 21, 23, 28

UMG Recordings, Inc. v.
Shelter Capital Partners LLC,
718 F.3d 1006 (9th Cir. 2013) 12

Viacom Int'l Inc. v. YouTube, Inc.,
940 F. Supp. 2d 110 (S.D.N.Y. 2013) 12

Statutes

17 U.S.C. § 410(c) 17

35 U.S.C. § 101 15

35 U.S.C. § 102 15

35 U.S.C. § 102(a) 18, 19

35 U.S.C. § 103 15

35 U.S.C. § 112(b) 17, 25

35 U.S.C. § 271(a) 14, 15

35 U.S.C. § 271(b) ..... *passim*

35 U.S.C. § 271(c) 6, 7, 8

Cited Authorities

Page

35 U.S.C. § 282(a).....16

35 U.S.C. § 282(b) 15

35 U.S.C. § 298.....9

Legislative Materials

H.R. Rep. No. 98, 112th Cong. 1st Sess. (2011) 9

Other Authorities

Black's Law Dictionary (10th ed. 2014).....16, 17

Federal Trade Commission, *The Evolving IP Marketplace: Aligning Patent Notice and Remedies With Competition* (2011).....25, 26

Federal Trade Commission, *To Promote Innovation: The Proper Balance of Competition and Patent Law and Policy* (2003) 27

Lee Petherbridge, *Positive Examination*, 46 IDEA 173 (2006) 25, 26, 27

Michael Frakes & Melissa Wasserman, *Is the Time Allocated to Review Patent Applications Inducing Examiners to Grant Invalid Patents?: Evidence from Micro-Level Application Data*, NBER Working Paper No. 20337, July 2014 26

Cited Authorities

Page

P.J. Federico, *Commentary On The New Patent Act*, 75 J. Pat. & Trademark Off. Soc'y 161 (1952) 8

Saurabh Vishnubhakat, *An Intentional Tort Theory of Patents*, Sept. 5, 2014 14

Ted M. Sichelman, *Commercializing Patents*, 62 Stan. L. Rev. 341 (2010) 27

STATEMENT OF IDENTITY AND INTEREST OF *AMICUS CURIAE*[1]

The Electronic Frontier Foundation ("EFF") is a nonprofit civil liberties organization that has worked for almost 25 years to protect consumer interests, innovation, and free expression in the digital world. EFF and its more than 25,000 dues-paying members have a strong interest in helping the courts and policy-makers in striking the appropriate balance between intellectual property and the public interest.

As part of its mission, EFF has often served as amicus in key patent cases, including *Alice Corp. Pty. Ltd. v. CLS Bank International*, 134 S. Ct. 2347 (2014) ("*Alice*"); *Limelight Networks, Inc. v. Akamai Technologies, Inc.*, 134 S. Ct. 2111 (2014) ("*Akamai*"); *Nautilus, Inc. v. Biosig Instruments, Inc.*, 134 S. Ct. 2120 (2014) ("*Nautilus*"); *Octane Fitness, LLC v. ICON Health & Fitness, Inc.*, 134 S. Ct. 1749 (2014); *Microsoft Corp. v. i4i Ltd. P'ship*, 131 S. Ct. 2238 (2011); *Bilski v. Kappos*, 561 U.S. 593 (2010); and *Quanta Computer, Inc. v. LG Elecs. Corp.*, 553 U.S. 617 (2008).

---

1. No counsel for a party authored this brief in whole or in part, and no such counsel or party made a monetary contribution intended to fund the preparation or submission of this brief. No person other than the amicus curiae, or its counsel, made a monetary contribution intended to fund its preparation or submission. Both Petitioner's and Respondent's counsel consented to the filing of this brief in writing.

INTRODUCTION AND SUMMARY OF ARGUMENT

In this case, the Federal Circuit correctly held that a good-faith belief—albeit a mistaken belief—that a patent is invalid is relevant to whether a party induced infringement under 35 U.S.C. § 271(b). The Federal Circuit based its holding on the fact that liability under § 271(b) requires intent to cause infringement. This legal foundation for the Federal Circuit's holding not only comports with this Court's recent discussions of inducement liability in *Limelight Networks, Inc. v. Akamai Technologies, Inc.*, 134 S. Ct. 2111 (2014), and *Global-Tech Appliances, Inc. v. SEB S.A.*, 131 S. Ct. 2060 (2011), it is also necessary to give effect to patent law's statutory scheme. Moreover, it is consistent with the analogous doctrine in copyright. Indeed, the Federal Circuit's understanding of the intent requirement for § 271(b) was undisputed between the parties and did not seem to be at issue in this appeal, until Commil suggested otherwise in its merits brief.

Instead, the question presented asks whether a good-faith belief that a patent is invalid may show that an accused inducer did not intend to cause infringement. This question is easily answered in the affirmative. The statutory framework for inducement supports such a defense. More generally, inducement liability, precisely described, necessarily requires an intent to induce an invasion of the rights of others. Finally, a meaningful intent requirement benefits the public.

An accused inducer can—and often does—reasonably and in good-faith believe that he does not induce any act that violates the rights of others. That is because, all too

often, those rights are difficult to define. Patent owners, encouraged by rules that often favor vagueness over clarity, frequently assert claims that are not well-defined until a court construes them. And this construction can affect both the scope and the validity of the patent.

Patent claims are meant to inform the public as to the scope of the invention, so that the public can know what is and is *not* covered by the patent. By acknowledging that a failure to put an alleged inducer on notice as to the scope of exclusive rights may give rise to a defense, this Court would encourage patent owners to be as clear as possible in their claiming. This in turn would encourage better examination processes, and improve the public's ability to rely on the resulting patent as a true identification of legitimate exclusive rights.

This Court should reject Commil's proposed standard and confirm that an intent to cause infringement is required to be liable under 35 U.S.C. § 271(b). This Court should further confirm that a good-faith belief that the accused acts are outside the scope of the patent grant, whether by patent invalidity or otherwise, may negate that intent.

ARGUMENT

I. The Statutory Framework of Indirect Infringement Requires a High Level of Intent to Cause Infringement for Inducement Liability

In its brief, Commil argues that intent to cause infringement is not required by *Global-Tech Appliances Inc. v. SEB S.A.*, 131 S. Ct. 2060 (2011) ("*Global-Tech*"),

despite previously acknowledging the contrary. *Compare* Pet. Br. Part I *with* Pet. for Cert. 12. This argument is both procedurally and substantively incorrect.

As an initial matter, this novel analysis should be dismissed because it is not properly before the Court. Even if it were, however, the theory cannot be squared with well-established patent law and policy. Commil and the Solicitor General incorrectly reduce inducement liability to little more than knowledge of the patent and an intent to cause acts which the *patent owner* believes are within the scope of the patent grant. *See* Pet. Br. 14; U.S. Br. 9-18. That is not enough.

A. The Issue of Whether § 271 Requires Knowledge of the Infringing Nature of the Accused Acts Is Not Properly Before the Court

As the Solicitor General acknowledges, whether a lack of knowledge of the infringing nature of induced acts is a defense to inducement "is not squarely before the Court." U.S. Br. 9-10 n.1. Indeed, Commil conceded the question in requesting certiorari. Pet. for Cert. 12, 24 ("the Court held [in *Global-Tech*] that inducement requires intent to cause a third party to infringe, not just intent to cause a third party to act in a manner that happens to be infringing").

To the extent Commil could be said to have argued for a change in the law that induced infringement under § 271(b) requires knowledge that the induced acts constitute patent infringement, it did so in connection with its second question presented for certiorari. *See* Reply to Pet. for Cert. 4. However, this Court declined to hear that issue, consistent with the suggestion of the Solicitor

General. *See* U.S. Br. as Amicus Curiae 17 (October 16, 2014) ("Commil does not challenge the Federal Circuit's understanding of the legal rule announced in *Global-Tech*"); S. Ct. Order Granting Certiorari (Dec. 5, 2014).

This is not an inconsequential issue. The unintended consequences of adopting Commil's theory have not been fully addressed by the parties or by the opinions below. The Court should decline to reach such a novel theory based on such an inadequate record.

B. Recognizing Inducement Liability Absent an Intent to Cause Infringement Would Ignore the Statutory Scheme

If the Court chooses to consider Commil's approach, it should do so only to reject it as contrary to patent law and policy.

This Court and Congress have taken care to ensure that intellectual property rights do not impede innovation, and tailored inducement standards accordingly. District and appellate courts have done the same. Accordingly, liability for inducement is strictly limited to circumstances of "acute fault." *Metro-Goldwyn-Mayer Studios Inc. v. Grokster, Ltd.*, 545 U.S. 913, 932-33 (2005)("*Grokster*"). The intent requirement for inducement helps maintain that limit, encouraging the creation and use of non-infringing activities, while at the same time providing a remedy for the patent owner where the infringer has knowledge of or is willfully blind to the infringement. *Accord Global-Tech*, 131 S. Ct. at 2068-71 ("[W]e now hold that induced infringement under § 271(b) requires knowledge that the induced acts constitute *patent infringement*.") (emphasis

added). Indeed, the rule Commil proposes would render 35 U.S.C. § 271(c), and the defense of substantial non-infringing uses, a dead-letter.

The Patent Act contains two types of indirect liability. One form—contributory infringement—is defined as the offer to sell or sale of a material part of a patented invention, "knowing the same to be especially made or especially adapted for use in an infringement of such patent, *and not a staple article or commodity of commerce suitable for substantial noninfringing use*[.]" 35 U.S.C. § 271(c) (emphasis added). Thus, the statute partly describes the knowledge sufficient to establish inducement liability: selling something with knowledge that it *could and would be used to infringe the patent rights of another. See Global-Tech*, 131 S. Ct. at 2067-68 (holding the knowledge requirement of § 271(b) is the same as that as under § 271(c)). But § 271(c) requires more: it also specifically requires that the thing sold is "not a staple article or commodity of commerce suitable for substantial noninfringing use." 35 U.S.C. § 271(c).

The second form of indirect liability under the Patent Act—inducement liability and the type at issue here—is described by 35 U.S.C. § 271(b). That section provides that "[w]hoever actively induces infringement of a patent shall be liable as an infringer." *Id.* Where a party is engaging in the sale of non-staples knowingly made or adapted for infringement, § 271(b) adds little—the party is already indirectly liable under § 271(c). Where the party provides products or services having substantial non-infringing uses, inducement liability might attach—but only in certain limited circumstances.

Specifically, liability under § 271(b), as with § 271(c), requires selling something with knowledge that it could and would be used to infringe the patent rights of another. But § 271(b) *also* requires that the person selling the good *intend* that others use the good to infringe. *Global-Tech*, 131 S. Ct. at 2068 ("we now hold that induced infringement under § 271(b) requires knowledge that the induced acts constitute *patent infringement*") (emphasis added).

Commil argues that inducement only requires knowledge that the patent owner *contends* that the defendant's acts are infringing. Under Commil's theory, liability under § 271(b) would always attach to articles of commerce *even if* they had substantial non-infringing uses. That is, a patent owner could evade the limits of § 271(c) liability by merely suing under § 271(b), as § 271(c)'s knowledge requirement would always be met under Commil's inducement test, regardless of the goods' non-infringing uses. As a practical matter § 271(c) would become superfluous. Thus if § 271(c) is to have effect, Commil's theory cannot be correct.

A district court has helpfully explained the differences between § 271(c) and § 271(b) as follows:

> It is, perhaps, *an unwarranted extension of § 271(b) to use it as a basis for ascribing liability in the absence of active solicitation.* The same conduct—sale of material or apparatus which can only be used in an infringement—is contributory infringement under § 271(c). The supplier of a staple will be liable for active inducement if it tells its purchaser, "Here is how we can help you infringe." It is liable if it

> sells a compound containing the staple when that compound can only be used effectively to practice a patented method, and it so intends, and § 271(c) so provides. The supplier is not liable if it merely makes that staple available, even though it knows that some purchasers will use it to infringe, and § 271(c) makes that distinction.

Oak Indus., Inc. v. Zenith Elecs. Corp., 697 F. Supp. 988, 994 (N.D. Ill. 1988) (emphasis added) (case cited approvingly in *Grokster*, 545 U.S. at 936).

Also helpful is a commentary on the 1952 Patent Act by P.J. Federico, the Chief Patent Examiner at the time of the introduction of §§ 271(b) and (c). In discussing the interplay between §§ 271(b) and (c), the commentary stated:

> Paragraphs (b) and (c) are independent as written but, in connection with the sale of such things as staple articles and commodities of commerce suitable for substantial noninfringing use, which fall within the specific exception of paragraph (c), *clearly something more than mere knowledge of an intended infringing use would have to be shown to make out a case of active inducement under paragraph (b).*

P.J. Federico, *Commentary On The New Patent Act*, 75 J. Pat. & Trademark Off. Soc'y 161, 214 (1952) (emphasis added).

The Court confirmed Federico's understanding in *Global-Tech*. Specifically, the Court recognized that

§ 271(b) could be read either to require "merely that the inducer lead another to engage in conduct that happens to amount to infringement" or, alternatively, to require that "the inducer must persuade another to *engage in conduct that the inducer knows is infringement*." *Global-Tech*, 131 S. Ct. at 2065 (emphasis added). The Court endorsed the latter interpretation. *Id.* at 2066.[2] In doing so, the Court adopted a rule that helps ensure that potential inducement penalties will not discourage merely *potentially* infringing activities.

C. The Analogous Standard in Copyright Supports Requiring a Showing of Intent to Cause Infringement.

To the extent that there may be any ambiguity regarding inducement liability standards under patent

---

2. Indeed, subsequent acts of Congress confirm that intent to cause infringement is required by § 271(b). In 2011, Congress enacted 35 U.S.C. § 298, which states that "[t]he failure of an infringer to obtain the advice of counsel with respect to any allegedly infringed patent . . . may not be used to prove . . . that the infringer intended to induce infringement." The Solicitor General argues that Congress's intent is unclear. *See* U.S. Br. 16 n.3. However, the House Report discussing § 298 states that § 298 was specifically intended to "legislatively abrogate [] the . . . decision in *Broadcom Corp. v. Qualcomm, Inc.*, 543 F.3d 683, 699 (Fed. Cir. 2008)." *See* H.R. Rep. No. 98, 112th Cong. 1st Sess. 53 (2011). In *Broadcom*, the alleged infringer knew of the patents-at-issue, and thus the Solicitor General is incorrect that the statute may be referring to whether an attorney-opinion was sought in the case of willful blindness with respect to a patent's existence. *See Broadcom*, 543 F.3d at 697 ("Qualcomm contends that it did not obtain non-infringement opinions because it had procured invalidity opinions for each relevant patent").

law, the Court may look to copyright law for guidance. *See Sony Corp. of Am. v. Universal City Studios, Inc.*, 464 U.S. 417, 439-42 (1984) (noting the "historic kinship between patent law and copyright law") ("*Sony*"); *see also Grokster*, 545 U.S. at 932-33, 936-37 (citing patent inducement as model for copyright inducement).

In the context of copyright law, the Court has twice cautioned against allowing indirect liability claims of infringement to hinder non-infringing uses. In *Sony*, the Court refused to impose liability for contributory infringement for "staple articles":

> "[A] sale of an article which though adapted to an infringing use is also adapted to other and lawful uses, is not enough to make the seller a contributory infringer. Such a rule would block the wheels of commerce."
>
> . . .
>
> The staple article of commerce doctrine must strike a balance between a copyright holder's legitimate demand for effective—not merely symbolic—protection of the statutory monopoly, and the rights of others freely to engage in substantially unrelated areas of commerce.

Sony, 464 U.S. at 441-42 (quoting *Henry v. A.B. Dick Co.*, 224 U.S. 1, 48 (1912)).

In *Grokster*, the Court reaffirmed this important principle:

> We are, of course, mindful of the need to keep from trenching on regular commerce or discouraging the development of technologies with lawful and unlawful potential. Accordingly, just as *Sony* did not find intentional inducement despite the knowledge of the VCR manufacturer that its device could be used to infringe, 464 U.S., at 439, n. 19, mere knowledge of infringing potential or of actual infringing uses would not be enough here to subject a distributor to liability.

545 U.S. at 937.

Accordingly, *Grokster* articulated an inducement standard that effectively distinguishes between services dedicated to infringement and those that have a legitimate purpose. Only "one who distributes a device with the object of promoting its use *to infringe* copyright, as shown by a *clear expression* or *other affirmative steps* taken to foster infringement" can be found liable for inducement. *Id.* at 936-37 (emphasis added).

By its terms, this standard requires the plaintiff to show: (1) that the defendant acted with the *specific objective* of promoting the use of its product to infringe; (2) that the defendant furthered that objective by *affirmative acts* taken to foster infringement; and (3) that the infringement at issue *actually resulted* from the defendant's inducing conduct.

The Court's precedents flatly contradict Commil's and the government's efforts to convert inducement into an unprecedented tort in which the *defendant's* required

intent is supplied by the *rightholder's* subjective belief. As elaborated in *Grokster*, inducement requires a high degree of culpability on the part of the accused *inducer*. A finding of such culpable intent to cause infringement was essential to the holding in *Grokster*, and no inquiry was made into the minds of the rightsholders. *Id.* at 938 (observing that both defendants "communicated a clear message" to users that they should use defendants' technology to violate copyright); *id.* at 924 ("each one clearly voiced the objective that recipients use [the software] to download copyrighted works, and each took active steps to encourage infringement").

The Court imposed these requirements for inducement to help ensure the standard would not impede legitimate services that are capable of substantial non-infringing uses. Services that depend on this breathing room include cloud storage, social networks, and other websites hosting user-generated content. *See, e.g.*, *UMG Recordings, Inc. v. Shelter Capital Partners LLC*, 718 F.3d 1006, 1031-33 (9th Cir. 2013); *Viacom Int'l Inc. v. YouTube, Inc.*, 940 F. Supp. 2d 110, 121 (S.D.N.Y. 2013). Importantly, *Grokster* did not impose liability for "ordinary acts incident to product distribution, such as offering customers technical support or product updates[.]" 545 U.S. at 937. Instead, liability depends on "purposeful, culpable expression and conduct." *Id.* Only by insisting on such a high bar for a showing of inducement could the Court be assured that its rule would not "compromise legitimate commerce or discourage innovation having a lawful promise." *Id.*

> In sum, where an article is "good for nothing else" but infringement, there is no legitimate public interest in its unlicensed availability, and

> there is no injustice in presuming or imputing an intent to infringe. Conversely, the doctrine absolves the equivocal conduct of selling an item with substantial lawful as well as unlawful uses, and limits liability to instances of more acute fault than the mere understanding that some of one's products will be misused. It leaves breathing room for innovation and a vigorous commerce.

Id. at 932-33 (citations omitted).

The holding in *Grokster* is particularly salient in this case, as it was cited in *Global-Tech* for the proposition that the patent law inducement liability turns "on purposeful, culpable expression and conduct." *Global-Tech*, 131 S. Ct. at 2067 (quoting *Grokster*, 545 U.S. at 937).

Patent law's statutorily created inducement liability should be no more expansive than copyright law's judicially created liability, especially given that the doctrines are committed to balancing the interests of inventors and authors on the one hand, and the interests of the public on the other. *See Sony*, 464 U.S. at 441 ("in contributory infringement cases arising under the patent laws the Court has always recognized the critical importance of not allowing the patentee to extend his monopoly beyond the limits of his specific grant").

II. Section 271(b) Requires a Showing of Intent to Cause the Violation of the Rights and Privileges of Another, Which May Be Negated by a Good-Faith, Mistaken Belief as to the Facts or Law

The question actually presented to this Court is whether a good-faith belief that a patent is invalid may be a defense to inducement liability under § 271(b). As Part I of this brief explains, inducement requires knowledge of the infringing nature of the induced acts, i.e. culpable intent. Because "infringement" refers to the violation of rights and privileges of another, a good-faith belief that one is *not* violating the rights and privileges of another—regardless of how one came to that conclusion—may negate the intent requirement of § 271(b).

A. Infringement Is the Violation of Rights; Absent Rights, There Can Be No Infringement

The Patent Act defines infringement. As is relevant here, 35 U.S.C. § 271(a) states that " . . . whoever without authority makes, uses, offers to sell, or sells any patented invention . . . infringes the patent."[3] Commil

3. The Solicitor General cites to dicta in *Global-Tech* for the proposition that a defendant's belief in invalidity is immaterial for liability under § 271(a), because direct infringement "is a strict-liability tort." *See* U.S. Br. 20 (citing *Global-Tech*, 131 S. Ct. at 2065 n.2). The Solicitor General's characterization of direct infringement as a "strict-liability tort" as opposed to an "intentional tort" is questionable given that direct infringement occurs as a result of affirmative acts, i.e. that the alleged infringer "makes, uses, sells, offers to sell, or sells" a patented invention. 35 U.S.C. § 271(a); *see* Saurabh Vishnubhakat, *An Intentional Tort Theory of Patents*, Sept. 5, 2014 (available at http://ssrn.com/abstract=2492200) (noting how direct infringement is much more akin to an intentional tort than a strict liability tort).

and the Solicitor General would have this Court hold that "infringement" occurs whenever the elements of a claim are met without authorization from the patent owner, regardless of the validity of the claim. *See* Pet. Br. 46; U.S. Br. 7.

They are incorrect. In essence, they seek to read out of the statute the requirement for infringement that the accused infringer make, use, offer to sell, or sell "any *patented* invention." 35 U.S.C. § 271(a) (emphasis added). That is, Commil would obviate the requirement that legal rights—in the form of a patent—do, in fact, exist to be infringed. *Cf. Akamai*, 134 S. Ct. at 2119 (in discussing the lack of direct infringement, noting that the actions accused "did not violate plaintiff's legal rights," or invade "plaintiff's protected interests").

This position ignores that the Patent Act's recognition of patent rights is conditional on certain statutory requirements—the same requirements that are invoked when validity is challenged. *See, e.g.*, 35 U.S.C. §§ 101 (an inventor "may obtain" a patent for certain statutory categories, "*subject to the conditions and requirements* of this title"); 102 ("A person shall be entitled to a patent *unless*..."); 103 ("A patent for a claimed invention *may not be obtained*..."); 282(b) (enumerating defenses, including "any ground specified in part II as a condition for patentability") (emphases added). A finding of invalidity thus results in the patent owner no longer holding any legal rights that could be "infringed."

Put differently: a party accused of direct infringement under § 271(a) cannot infringe an invalid patent because there is no "*patented invention*" as to which the plaintiff

has legally enforceable rights. This principle follows from "what a patent is: the conferral of rights in a particular claimed set of elements." *Akamai*, 134 S. Ct. at 2117; *see also* Black's Law Dictionary (10th ed. 2014) (defining a "patent" as "[t]he right to exclude others from making, using, marketing, selling, offering for sale, . . . granted by the federal government to the inventor if the device or process is novel, useful, and nonobvious").

The presumption of validity does not contradict this analysis. *See* 35 U.S.C. § 282(a). Specifically, the presumption of validity is a procedural inference that shifts the burden of proof on to the accused infringer to show that the rights which are legally assumed to exist, do not *in fact* exist. The presumption, however, does not negate the requirement that a valid patent exist for infringement to be maintained. *Cf. Lear, Inc. v. Adkins*, 395 U.S. 653, 668 (1969) ("federal law requires that all ideas in general circulation be dedicated to the common good unless they are protected by a *valid* patent") (emphasis added).[4]

Indeed, in the analogous copyright action, it is well-recognized that in order to prevail on a claim of infringement, the copyright holder must have a valid copyright, even though there is a similar presumption of validity. *See Feist Publ'ns, Inc. v. Rural Tel. Serv. Co.*, 499

4. To the extent the presumption of validity is relevant, if at all, it would be that the burden is on the accused inducer to show he had a good-faith belief in invalidity in order to negate the claim of induced infringement. That is, because of the presumption of validity, it is not on the patent owner to show a *lack* of a good-faith belief in invalidity, as suggested by Commil, see Pet. Br. 16, but rather on the defendant to prove a good-faith belief of invalidity once the patent owner has presented its prima facie case.

U.S. 340, 361 (1991) (noting that the elements of copyright infringement are "(1) ownership of a *valid* copyright, and (2) copying of constituent elements of the work that are original") (emphasis added); 17 U.S.C. § 410(c) ("In any judicial proceedings the certificate of registration . . . shall constitute prima facie evidence of the validity of the copyright and of the facts stated in the certificate[.]").

Thus a more appropriate definition of "infringement" is that it is the violation of the rights or privileges held by another. *See* Black's Law Dictionary (10th ed. 2014) (defining infringement as "[a]n act that interferes with one of the exclusive rights of a patent, copyright, or trademark owner");[5] *Akamai*, 134 S. Ct. at 2119. A patent owner may not have the procedural burden of proving her rights exist in order to succeed on a claim of infringement, but she must have these rights nonetheless.

B. The Rights of Patent Owners Are Defined by the Patent's Claims, Whose Construction Impacts Myriad Issues Relating to Infringement and Validity

A patent's claims define the exclusionary rights and privileges held by the patent owner. *See Akamai*, 134 S. Ct. at 2119 ("patentees have a right only to the set of elements claimed in their patents and nothing further."); 35 U.S.C. § 112(b). And how the claims are interpreted leads to interrelated conclusions as to validity and infringement

5. Similarly, Black's Law Dictionary (10th ed. 2014) defines "invalid" as "not legally binding." Thus an invalid patent is one that is not legally binding and cannot form the basis for an infringement claim.

of the claims, and thus interrelated conclusions as to the patent's granted rights and privileges. *See, e.g., Teva Pharms. USA Inc. v. Sandoz, Inc.*, 135 S. Ct. 831, 842 (2015) (vacating a finding of indefiniteness resulting from the Federal Circuit's construction of the claims) ("*Teva*"); *Markman v. Westview Instruments, Inc.*, 517 U.S. 370, 376 (1996) (affirming a finding of noninfringement based on the construction of the term "inventory").

Commil and the Solicitor General both recognize that often the claims must be construed before a finding of infringement. *See* Pet. Br. 46 ("To determine infringement, the asserted patent claims (*as construed by the court*) are compared to the accused products to determine whether the patent claim covers the alleged infringers product or process.") (emphasis added, internal citation and quotation omitted); U.S. Br. 18 ("The existence of direct infringement often turns on complex legal and factual questions, such as how to construe the claims of the patent in suit[.]"). But the way patent claims are construed impacts not only whether the patent owner can show that the alleged infringer practices each element of the claim but also whether the claim is valid.

Consider the following hypothetical scenario. A patent owner may accuse another party of inducing acts that the patent owner believes infringes certain claims. The accused inducer may evaluate the charge of inducement and conclude—in good faith—that the patent owner's rights have not been violated because the accused inducer had implemented the accused functionality before the apparent priority date. *See* 35 U.S.C. § 102(a) (2002). That is, the accused infringer could legitimately believe that *if* the patent is construed to cover the allegedly infringing

acts, the patent will be invalidated as anticipated, but *if* the patent is construed so as to *not* be anticipated, then the accused acts will not read on the elements of the claim. *See Schering Corp. v. Geneva Pharms, Inc.*, 339 F.3d 1373, 1379 (Fed. Cir. 2003) ("that which would literally infringe if later in time anticipates if earlier") (internal quotation and citation omitted). Either way, the accused infringer believes—in good faith—that rights and privileges of another are not being violated. The fact that this accused infringer is not yet certain whether its best defense is non-infringement or invalidity does not change the fact that it lacks the intent to violate the rights of another.

But a good-faith mistake of fact could impact both the validity and infringement analyses. Suppose that, in the previous hypothetical, the accused inducer began implementing the allegedly infringing acts eleven months prior to the patent application's filing date.[6] In such a case, it would be reasonable to believe that the patent is either invalid or not-infringed. But it is *also* possible (albeit unlikely) that, unbeknownst to the accused infringer, the patent owner will be able to show that the inventor conceived of the invention more than eleven months before the filing of the patent, and that she worked diligently to reduce her invention to practice. *See, e.g., Mahurkar v. C.R. Bard, Inc.*, 79 F.3d 1572, 1576-79 (Fed. Cir. 1996) (affirming finding that prior art did not anticipate under 35 U.S.C. § 102(a) based on inventor testimony regarding conception "in his kitchen" more than a year before the patent filing date and corroborating evidence

6. This hypothetical assumes that the patent application was filed before the effective date of the Leahy-Smith America Invents Act (PL 112-29, Sept. 16, 2011).

of inventor "confidentially disclos[ing]" invention to an third-party). These facts, unknown to the accused inducer and undiscoverable from the public record, could render him liable for infringement, contrary to the reasonable assumptions the accused inducer made when presented with the claim. *Id.*

A further example of a situation where an accused inducer may in good-faith believe himself to be inducing activities outside the scope of the patent grant can be found in *3M Innovative Properties Co. v. Tredegar Corp.*, 725 F.3d 1315 (Fed. Cir. 2013)("*3M Innovative*"). There, the accused infringer noted that the patent applicant made an amendment during prosecution in response to prior art and in doing so, changed the claim term "substantially continuous contact" to "continuous contact." *Id.* at 1325-26. The accused infringer argued that this narrowed the scope of the claim term "continuous contact" to particular embodiments disclosed in the specification. *See id.* at 1325-26. The district court agreed. *Id.* at 1324. The Federal Circuit reversed. *Id.* at 1325-26. Specifically, the Federal Circuit held that the patent owner presented a "reasonable, contrary reading of the prosecution history" and "[w]here an applicant's statements are amenable to multiple reasonable interpretations, they cannot be deemed [a] clear and unmistakable" disclaimer required under Federal Circuit law to narrow a claim term meaning. *Id.* at 1326 (citing *Grober v. Mako Prods., Inc.*, 686 F.3d 1335, 1342 (Fed. Cir. 2012) and paraphrasing *Grober*'s holding as "rejecting prosecution disclaimer arguments because the applicant's ambiguous statements distinguishing from prior art did not focus on specific prior art features"). In a concurring opinion, Judge Plager noted that the claim construction determination "[took]

four judges and some seventy pages of densely written opinions to find meaning in th[e] terms" and "there [was] a conflicting or indeterminate written description and prosecution history with regard to the claim terms at issue." *Id.* at 1334-35. Thus *3M Innovative* presents a situation where an accused inducer could believe in good-faith that the accused activities were disclaimed by the patent applicant, yet be found incorrect only after years of litigation because the patent applicant's statements were not found to be "clear and unmistakable" by a court.

The hypothetical above and *3M Innovative* demonstrate that how the claims are construed impacts the scope and content of the prior art as well as the scope of the claims. But more importantly, in any given dispute, claim construction could impact myriad other issues such as indefiniteness, *see Teva*, 135 S. Ct. at 836, whether the patent meets the written description requirement, *see Lochner Techs., LLC v. Vizio, Inc.*, 567 F. App'x 931, 938 (Fed. Cir. 2014), and whether the patent meets the enablement requirement, *see Auto. Techs. Int'l, Inc. v. BMW of N. Am., Inc.*, 501 F.3d 1274, 1282 (Fed. Cir. 2007).[7]

The accused infringer may have certain good-faith beliefs as to the scope and extent of the rights claimed by the patent owner depending solely on how claims are construed, a process both Commil and the Solicitor General recognize is often necessary before a finding of infringement. There is no principled reason to find the

7. These invalidity defenses were all raised by Cisco, and thus could form the basis of a good-faith belief that the claims were invalid, thereby negating the intent required for inducement. *See* Pet. App. 5a-6a.

accused inducer liable solely because he is unsure as to which theory he would prevail under. The knowledge held by the accused inducer is the same whether it is described as a good-faith belief in "noninfringement" or "invalidity": the accused inducer does not knowingly intend to cause the violation of the rights of the patent owner. Indeed, the accused inducer intended to cause acts that it—in good faith—thought free for all to practice and reserved to no one.

C. An Incorrect Belief as to the Scope of the Patent Rights May Negate the Intent Requirement

Inducement liability is premised on a finding that a party had the culpable intent to cause infringement of a valid patent. *See* Part I, *supra*. For purposes of the intent analysis, it does not necessarily matter *why* a party believes he is not encouraging infringing acts, e.g., whether the complained of acts do not meet each element of the claim or the patent rights are not legally valid. In either circumstance, the salient fact is that the accused inducer reasonably believed—in good faith—that the acts in question were not infringing and did not otherwise intend others to violate patent rights. This good-faith belief that acts are not protected by a patent grant may negate the intent requirement.

Discussing the intent required for liability under § 271(b) in a dissent from the denial of rehearing en banc in this case, Judge Reyna noted that "[w]hether the accused infringer held a good faith belief that it was inducing conduct that fell outside the scope of the claims *is directly relevant to this intent inquiry*." Pet App. 59a (Reyna, J., dissenting) (emphasis added). Judge Reyna

then continued: "[b]ut whether the accused infringer held a good faith belief in invalidity . . . is wholly unrelated to the accused infringer's conduct vis-à-vis the limitations of a presumptively valid patent claim." *Id.*

Judge Reyna is partially correct: a good-faith belief that conduct falls outside the scope of the patent grant is directly relevant. But where Judge Reyna errs is in failing to recognize that what falls in- or out-side the patent grant is often determined by examining the claims, the specification, the prior art, or any and all of those things. As illustrated above, an alleged infringer may believe—in good-faith—that a patent cannot be read to cover the allegedly infringing acts as the patent would then be invalid. But he may be mistaken in his belief, through no fault of his own, and thus inadvertently cause infringement of another's rights. It is whether or not this mistake was in good-faith that should be relevant to the intent inquiry, not the source of it from within patent doctrine.

Factual and legal disputes regarding the scope and existence of patent rights often exist. *See, e.g.*, *Teva*, 135 S. Ct. at 837 (factual issues may need to be determined in order to construe claims); *Nautilus*, 134 S. Ct. at 2131 (remanding so as to determine, as a factual matter, whether claims met definiteness standard), *Alice*, 134 S. Ct. 2347 (considering whether, as a legal matter, the asserted claims were directed to patentable subject matter). It follows naturally, then, that an accused inducer may—mistakenly—believe himself to be respecting patent rights and not encouraging others to engage in acts within the patent scope. *See* Pet. App. 59a (Reyna, J., dissenting) ("Whether the accused infringer held a good faith belief that it was inducing conduct that fell outside

the scope of the claims is directly relevant to this intent inquiry.") The law should not make such an actor liable for induced infringement. To do otherwise discourages legitimate innovation and improperly grants rights to exclude against those whom Congress has recognized are otherwise protected from liability. *See* Part I, *supra*.

III. The Defense of a Good-Faith Belief that Patent Rights Are Not Being Violated Encourages Clearer Claims, Specifications, and Prosecution Histories

One of the most important aspects of our patent system is the public notice function. That function is better met through a rule that recognizes as a defense to inducement the good-faith belief that the induced acts are not protected by a valid patent. As the Court has recognized:

> The limits of a patent must be known for the protection of the patentee, the encouragement of the inventive genius of others and the assurance that the subject of the patent will be dedicated ultimately to the public. The statute seeks to guard against unreasonable advantages to the patentee and disadvantages to others arising from uncertainty as to their rights. The inventor must inform the public during the life of the patent of the limits of the monopoly asserted, so that it may be known which features may be safely used or manufactured without a license and which may not.

Gen. Elec. Co. v. Wabash Appliance Corp., 304 U.S. 364, 369 (1938) (internal quotation and citation omitted).

A. A Defense Based on a Good-Faith Belief That the Induced Acts Are Not Protected By a Valid Patent Encourages Patent Owners to More Clearly Describe their Inventions, to the Benefit of the Patent Office and the Public

Recognizing that a good-faith belief that the accused acts are not protected by a valid patent may negate the intent requirement of inducement liability creates incentives for better patenting, and thus is good public policy. Specifically, having a rule that acknowledges what amounts to ambiguity as a potential defense encourages clearer claiming to the benefit of both patent owners and those who legitimately wish to innovate around patents.[8]

A patent with the clearest claims would likely be the least susceptible to claims of a good-faith belief that the scope of the rights of the patent do not extend to the allegedly infringing acts. *Cf.* FTC Report at 85 (2011) (noting that some patent owners often want their patents to be clear so as to allow the patent owner to "rely on the resulting patent"); Lee Petherbridge, *Positive Examination*, 46 IDEA 173, 173 (2006) ("increasing informational content . . . benefits all participants in the

---

8. Although this Court recently pronounced a stricter standard for meeting the definiteness requirement of 35 U.S.C. § 112(b), "even with more vigorous application of definiteness principles, claims often will not be undebatably clear on their face." Federal Trade Commission, *The Evolving IP Marketplace: Aligning Patent Notice and Remedies With Competition* (2011), at 102 ("FTC Report"), *available at* http://www.ftc.gov/sites/default/files/documents/reports/evolving-ip-marketplace-aligning-patent-notice-and-remedies-competition-report-federal-trade/110307patentreport.pdf (last visited Jan. 28, 2015).

patent system because it allows them to form a more certain understanding of the boundaries of the property at issue and more usefully compare it to prior art and commercial goods and services") ("Petherbridge").

Importantly, clear claims, specifications, and prosecution histories would allow the Patent Office to more efficiently and effectively evaluate patent applications. *See id.* at 206 ("the more clearly the examiner understands the boundaries of the property being examined, the more efficiently he can search for prior art, since less time will be spent pursuing irrelevant information"). It is widely known that the Patent Office does not spend significant amounts of time examining patents. A recent study estimated that, on average, patent examiners spend only 19 hours examining a patent application before issuance. Michael Frakes & Melissa Wasserman, *Is the Time Allocated to Review Patent Applications Inducing Examiners to Grant Invalid Patents?: Evidence from Micro-Level Application Data*, NBER Working Paper No. 20337, July 2014, at 8. Patent applicants incentivized to present clearer claims at the outset better ensure that the Patent Office can use the time for more effective evaluation of whether the application has met the statutory requirements for patent rights.

Clearer claims would also allow patent owners and the public to better rely on patents as a legitimate and enforceable claim of exclusionary rights. "Claims that clearly delineate a patent's scope are essential for meaningful third-party notice." FTC Report, *supra*, at 98. When boundaries of invention are made clearer, "patentees and competitors may be able to more reliably determine whether the patent is narrow, weak, or likely to be held

invalid." Petherbridge, *supra*, at 206. Unclear claims, in contrast, greatly inhibit innovation and competition. *See* Ted M. Sichelman, *Commercializing Patents*, 62 Stan. L. Rev. 341, 361 (2010). For example, unclear and questionable patents deter the entry of new competitors by needlessly increasing licensing and design-around costs. *See* Federal Trade Commission, *To Promote Innovation: The Proper Balance of Competition and Patent Law and Policy*, at 5-7 (2003); *cf. 3M Innovative*, 725 F.3d at 1335 (Plager, J., concurring) ("Better drafting of patent applications can only improve the efficiency of the patent system by clearly delineating a patentee's property rights, thereby reducing wasteful and unnecessary litigation.").

B. Given the Relative Positions of Patent Owners, the Patent Office, and Accused Inducers, the Risk of Unclear Claims is Appropriately Placed on the Patent Owner

Patent applicants are the best-placed to ensure claims are as clear as possible. *Halliburton Energy Servs., Inc. v. M-I LLC*, 514 F.3d 1244, 1255 (Fed. Cir. 2008) ("the patent drafter is in the best position to resolve the ambiguity in... patent claims").[9] It is the patent applicant that knows her invention and what she intended to claim, and is the party best able to make that position known in the public record, either through claims, the specification, or the prosecution history. *See 3M Innovative*, 725 F.3d at 1336 (Plager J., concurring) (noting that it is "a patentee (more correctly

9. To the extent the recognition of the defense diminishes the availability of § 271(b) to protect patent holders' rights, see U.S. Br. 30, such a result is not a failing of the patent system. Instead, it is the appropriate allocation of risk in the system in light of the role each participant occupies.

a patent applicant) who had the last clear chance . . . to avoid this kind of unnecessary claim construction game" and "a competitor [] should not have the risk of guessing wrong about what a claim term could possibly mean").

Yet Commil and the Solicitor General would have inducement liability turn on the patent owner's *subjective*—and possibly previously-unstated—beliefs regarding the scope of her claims. *See* Pet. Br. 14; U.S. Br. 17-18. Such a rule would create an incentive for the patent owner to obfuscate the true scope of her claims as much as possible *ex ante*, knowing that she could later rely on her own, previously undisclosed *post facto* interpretation of her claims in order to capture those who would otherwise not have notice of infringement from the patent alone. This rule incentivizes ambiguity and is contrary to the public notice function of patents. *See Nautilus*, 134 S. Ct. at 2129 ("a patent must be precise enough to afford clear notice of what is claimed, thereby apprising the public of what is still open to them") (internal citation and quotation omitted); *cf. id.* ("patent applicants face powerful incentives to inject ambiguity into their claims").

Such a rule is also contrary to the requirement that "a patent holder's actual intentions have effect only to the extent that they are expressed in the public record." *Teva*, 135 S. Ct. at 847 (Thomas, J., dissenting) (citing *Keystone Bridge Co. v. Phoenix Iron Co.*, 95 U.S. 274, 279 (1877); *Goodyear Dental Vulcanite Co. v. Davis*, 102 U.S. 222, 227 (1880) ("examining 'the avowed understanding of the patentee,' but disclaiming any holding that such understanding 'c[ould] be allowed to enlarge, diminish, or vary the language of a patent afterwards issued'")).

"[H]owever much desired by the claim drafters, who want claims that serve as business weapons and litigation threats, the claims cannot go beyond the actual invention that entitles the inventor to a patent." *Retractable Tech. Inc. v. Becton, Dickinson & Co.*, 653 F.3d 1296, 1311 (Fed. Cir. 2011) (Plager, J., concurring) (internal citations omitted). Encouraging claim clarity helps ensure the patent owner does not illegitimately burden the public domain by making infringement allegations that stretch her claims beyond what was actually invented, and appropriately limits the patent owner's availability to recover from those who—in good faith—believed their activities to be in the public domain.

CONCLUSION

This Court should confirm the holding of *Global-Tech* that an intent to cause infringement is required to be liable under 35 U.S.C. § 271(b). This Court should further confirm that a good-faith belief that the accused acts are outside the scope of the patent grant, whether by patent invalidity or otherwise, may negate that intent.

Respectfully submitted,

VERA RANIERI
Counsel of Record
DANIEL K. NAZER
MICHAEL BARCLAY
ELECTRONIC FRONTIER FOUNDATION
815 Eddy Street
San Francisco, CA 94109
(415) 436-9333
vera@eff.org

Attorneys for Amicus Curiae
Electronic Frontier Foundation

February 26, 2015

AMICUS CURIAE BRIEF

Supreme Court, U.S.
FILED
FEB 26 2015
OFFICE OF THE CLERK

No. 13-896

IN THE

Supreme Court of the United States

COMMIL USA, LLC,

Petitioner,

v.

CISCO SYSTEMS, INC.,

Respondent.

On Writ Of Certiorari
To The United States Court Of Appeals
For The Federal Circuit

BRIEF FOR EMC CORPORATION, ACUSHNET COMPANY, CTIA – THE WIRELESS ASSOCIATION, DELL INC., DROPBOX, INC., FACEBOOK, INC., GARMIN INTERNATIONAL, INC., GOOGLE INC., HEWLETT-PACKARD COMPANY, INTEL CORPORATION, ORACLE CORPORATION, QVC, INC., RED HAT, INC., SAS INSTITUTE INC., SYMMETRY LLC, VIZIO, INC., AND XILINX, INC. AS AMICI CURIAE IN SUPPORT OF RESPONDENT

PAUL T. DACIER
KRISHNENDU GUPTA
WILLIAM R. CLARK
THOMAS A. BROWN
EMC CORPORATION
176 South Street
Hopkinton, MA 01748
(508) 293-6654

Counsel for EMC Corporation

THOMAS G. HUNGAR
Counsel of Record
MATTHEW D. MCGILL
GIBSON, DUNN & CRUTCHER LLP
1050 Connecticut Avenue, N.W.
Washington, D.C. 20036
(202) 955-8500
thungar@gibsondunn.com

*Counsel for Amici Curiae**

[Additional Counsel Listed on Inside Cover]

SUZANNE MICHEL
GOOGLE INC.
25 Massachusetts Avenue, N.W.
Suite 900
Washington, D.C. 20001
(202) 677-5398

Counsel for Google Inc.

ALEXANDER N. HARRIS
GIBSON, DUNN & CRUTCHER LLP
555 Mission Street
Suite 3000
San Francisco, CA 94105
(415) 393-8264

*Counsel for Amici Curiae**

MATTHEW SARBORARIA
ORACLE CORPORATION
500 Oracle Parkway
Redwood City, CA 94065
(650) 506-5200

Counsel for Oracle Corporation

**Counsel for Amici Curiae EMC Corporation, Acushnet Company, CTIA – The Wireless Association, Dell Inc., Dropbox, Inc., Facebook, Inc., Garmin International, Inc., Hewlett-Packard Company, Intel Corporation, QVC, Inc., Red Hat, Inc., SAS Institute Inc., Symmetry LLC, VIZIO, Inc., and Xilinx, Inc.*

TABLE OF CONTENTS

Page

INTEREST OF AMICI CURIAE 1

SUMMARY OF THE ARGUMENT 3

ARGUMENT 6

I. INDUCEMENT LIABILITY REQUIRES KNOWLEDGE THAT SOMEONE IS DIRECTLY INFRINGING A VALID PATENT. 7

A. *Global-Tech* Unambiguously Held That An Inducer Must Know That The Induced Acts Constitute Patent Infringement. 9

B. A Defendant Who Encourages Another In The Good-Faith Belief That The Patent Is Invalid Does Not Know That The Acts He Encourages Constitute Patent Infringement. 21

II. EXPANDING SECONDARY LIABILITY TO REACH THOSE WHO ACT WITH A GOOD-FAITH BELIEF OF INVALIDITY WOULD STIFLE COMPETITION AND INNOVATION. 26

CONCLUSION 36

TABLE OF AUTHORITIES

Page(s)

CASES

Alice Corp. Pty. v. *CLS Bank Int'l*,
134 S. Ct. 2347 (2014).....3, 26, 27, 28

Aro Mfg. Co. v. *Convertible Top Replacement Co.*,
377 U.S. 476 (1964).....9, 14, 15, 16

Calypso Wireless, Inc. v. *T-Mobile USA, Inc.*,
586 F. App'x 707 (Fed. Cir. 2014).....31

Cardinal Chem. Co. v. *Morton Int'l, Inc.*,
508 U.S. 83 (1993).....22, 29

Cortelyou v. *Charles Eneu Johnson & Co.*,
207 U.S. 196 (1907).....14, 19

Dawson Chem. Co. v. *Rohm & Haas Co.*,
448 U.S. 176 (1980).....16, 17

eBay Inc. v. *MercExchange, L.L.C.*,
547 U.S. 388 (2006).....33

Enzo Biochem, Inc. v. *Applera Corp.*,
605 F.3d 1347 (Fed. Cir. 2010).....18, 31

Field v. *Mans*,
516 U.S. 59 (1995).....24

FTC v. *Actavis, Inc.*,
133 S. Ct. 2223 (2013).....22

Global-Tech Appliances, Inc. v. *SEB S.A.*,
131 S. Ct. 2060 (2011)..... 1, 5, 6, 7, 8, 9, 10, 11, 12
15, 21, 23, 24, 32, 33, 35

Heaton-Peninsular Button-Fastener Co. v. *Eureka Specialty Co.*,
77 F. 288 (6th Cir. 1896).....20

Henry v. *A.B. Dick Co.*,
224 U.S. 1 (1912).....19, 20

i4i Ltd. P'ship v. *Microsoft Corp.*,
598 F.3d 831 (Fed. Cir. 2010).....13

Ill. Tool Works Inc. v. *Indep. Ink, Inc.*,
547 U.S. 28 (2006).....20

Kansas v. *Nebraska*,
No. 126, Orig. (U.S. Feb. 24, 2015) 24

KSR Int'l Co. v. *Teleflex Inc.*,
550 U.S. 398 (2007).....3, 27, 28, 34

Lazare Kaplan Int'l, Inc. v. *Photoscribe Techs., Inc.*,
714 F.3d 1289 (Fed. Cir. 2013).....8

Limelight Networks, Inc. v. *Akamai Techs., Inc.*,
134 S. Ct. 2111 (2014).....8, 21, 22, 23

Liparota v. *United States*,
471 U.S. 419 (1985).....25

Markman v. *Westview Instruments, Inc.*,
517 U.S. 370 (1996).....30

Mayo Collaborative Servs. v. *Prometheus Labs., Inc.*,
132 S. Ct. 1289 (2012).....3, 33, 34

McLaughlin v. *Richland Shoe Co.*,
486 U.S. 128 (1988).....25

Medtronic, Inc. v. *Mirowski Family Ventures, LLC*,
134 S. Ct. 843 (2014).....29

Metro-Goldwyn-Mayer Studios Inc. v. *Grokster, Ltd.*,
545 U.S. 913 (2005).....4, 7, 9, 16, 17, 18, 33, 35

Motion Picture Patents Co. v. *Universal Film Mfg. Co.*,
243 U.S. 502 (1917).....20

Nautilus, Inc. v. *Biosig Instruments, Inc.*,
134 S. Ct. 2120 (2014).....3, 27, 28

Safeco Ins. Co. of Am. v. *Burr*,
551 U.S. 47 (2007).....25

State Street Bank & Trust Co. v. *Signature Fin. Grp.*,
149 F.3d 1368 (Fed. Cir. 1998).....26

Teva Pharm. USA, Inc. v. *Sandoz, Inc.*,
135 S. Ct. 831 (2015).....18

Trans World Airlines, Inc. v. *Thurston*,
469 U.S. 111 (1985).....25

Veritas Operating Corp. v. *Microsoft Corp.*,
562 F. Supp. 2d 1141 (W.D. Wash. 2008).....13

Wallace v. *Holmes*,
29 F. Cas. 74 (C.C.D. Conn. 1871).....4

CONSTITUTIONAL PROVISION

U.S. Const. art. I, § 8, cl. 8.....5, 26, 34

STATUTES

35 U.S.C. § 101.....22, 26

35 U.S.C. § 103.....27

35 U.S.C. § 271(c).....14, 15, 16

OTHER AUTHORITIES

Am. Jur. 2d *Negligence* 24

James Bessen, *The Evidence Is In: Patent Trolls Do Hurt Innovation*, Harv. Bus. Rev., July 2014.....32

James Bessen, Jennifer Ford & Michael J. Meurer, *The Private and Social Costs of Patent Trolls*, Regulation, Winter 2011-2012.....32

Donald S. Chisum, *Chisum on Patents* 15

Christopher A. Cotropia, *The Folly of Early Filing in Patent Law*, 61 Hastings L.J. 65 (2009) 31

P.J. Federico, *Commentary on the New Patent Act*, 75 J. Pat. & Trademark Off. Soc'y 161 (1993) (reprinted from Title 35, United States Code Annotated (West 1954)) 17

Robin Feldman, *Patent Demands & Startup Companies: The View from the Venture Capital Community* (UC Hastings Research Paper No. 75, 2013) 34

FTC, *The Evolving IP Marketplace: Aligning Patent Notice and Remedies with Competition* (2011).....29

Timothy R. Holbrook, *The Intent Element of Induced Infringement*, 22 Santa Clara Computer & High Tech. L.J. 399 (2006).....29, 34

H.R. Rep. No. 82-1923 (1952).....23

Mark A. Lemley, *Inducing Patent Infringement*, 39 U.C. Davis L. Rev. 225 (2005).....28

Brian J. Love & Shawn Ambwani, Inter Partes *Review: An Early Look at the Numbers*, 81 U. Chicago L. Rev. Dialogue 93 (2014) 30

Lisa Larrimore Ouellette & Jonathan Masur, *How Will* Nautilus *Affect Indefiniteness at the PTO?*, PatentlyO (June 5, 2014) 27

Restatement (First) of Torts § 876(b) (1939).....24

S. Rep. No. 82-1979 (1952).....15, 17, 23

Norman J. Singer & J.D. Shambie Singer, *Statutes and Statutory Construction* (7th ed. 2012) 24

Catherine Tucker, *The Effect of Patent Litigation and Patent Assertion Entities on Entrepreneurial Activity* (MIT Sloan School Working Paper 5095-14, 2014).....32

USPTO, 2014 Interim Guidance on Patent Subject Matter Eligibility, 79 Fed. Reg. 74,618 (Dec. 16, 2014) 27

World Intellectual Prop. Org., Statistical Country Profiles: United States of America 4, 26

INTEREST OF AMICI CURIAE[1]

Just four Terms ago, this Court "h[e]ld that induced infringement under § 271(b) requires knowledge that the induced acts constitute patent infringement." *Global-Tech Appliances, Inc.* v. *SEB S.A.*, 131 S. Ct. 2060, 2068 (2011). This case presents the question whether an accused inducer's evidence of a good-faith belief that the asserted patent is invalid—and thus that no one can be held liable for infringement—is probative of an absence of "knowledge that the induced acts constitute patent infringement." *Ibid.* The court of appeals, in a straightforward application of *Global-Tech*, held that such evidence is relevant.

Perhaps recognizing the force of the court of appeals' logic, Petitioner and its amici now challenge the central holding of *Global-Tech*, arguing that it "does not necessarily follow" from this Court's reasoning. Pet. Br. 17; *see also, e.g.*, U.S. Br. 12 (asserting that *Global-Tech* did not "clearly resolve" whether a defendant "must additionally possess actual knowledge that the induced acts constitute infringement").

Amici curiae represent a diverse collection of leading technology companies, and have a substantial interest in the correct resolution of that challenge. Collectively, amici own over 98,000 United States patents and recognize the importance of pro-

---

[1] All parties have consented to the filing of this brief. No counsel for any party authored this brief in whole or in part, and no person or entity, other than amici or their counsel, made a monetary contribution intended to fund the preparation or submission of this brief.

tecting valid intellectual property rights. But amici frequently are targeted by litigants with opportunistic accusations of inducing infringement of patents, despite amici's lack of knowledge that any valid patent has been infringed. And the constant drumbeat of such lawsuits—hundreds more annually than even just ten years ago—creates a significant drag on (and sometimes, in the cases of smaller companies, an existential threat to) their ability to engage and innovate in their lines of business.

The alleged conduct underlying such accusations of inducement might be distributing a product with a multitude of noninfringing uses that, when combined with another product, allegedly infringes a patent on the larger combination apparatus or system; selling a product that a purchaser uses to infringe a patent on a method, even though the product also has numerous admittedly noninfringing uses; or providing a service with noninfringing uses that users also may use to infringe a method patent. Because plaintiffs may file inducement lawsuits based on marketing even staple articles of commerce, amici frequently find some of their most widely used and essential products and services threatened by patent litigation.

Yet patentees (more often than not, so-called non-practicing entities) frequently assert patents whose application to the accused products is dubious. In these circumstances, amici often believe in good faith that, if the patent is construed narrowly, the product does not infringe but, if the patent is construed broadly enough to reach the product, the patent is invalid. In these circumstances, and many others, amici thus are forced to defend claims that

they induced others' acts of infringement, even when they reasonably believe that those actions do not infringe because the asserted patent, particularly if construed broadly enough to suggest infringement, is invalid.

SUMMARY OF THE ARGUMENT

As a doctrine of *secondary* liability, inducement always has been a narrow exception to the rule that patent liability requires the defendant to practice each element of a valid patent. Because secondary liability thus extends the patent monopoly to sweep in noninfringers, unlike direct infringement it consistently has been understood to require a culpable mental state.

Many of the suits facing amici are brought by non-practicing entities, who routinely assert patents of questionable validity. Indeed, there are millions of patents in force in this country, many of which were issued before this Court's recent decisions correcting unduly relaxed standards for patent validity that were previously applied by the Patent Office and the lower courts. *See, e.g.*, *Alice Corp. Pty.* v. *CLS Bank Int'l*, 134 S. Ct. 2347 (2014); *Nautilus, Inc.* v. *Biosig Instruments, Inc.*, 134 S. Ct. 2120 (2014); *Mayo Collaborative Servs.* v. *Prometheus Labs., Inc.*, 132 S. Ct. 1289 (2012); *KSR Int'l Co.* v. *Teleflex Inc.*, 550 U.S. 398 (2007).

This is especially true of vague patents claiming computer-implementations of fundamental business concepts or foundational technologies. Such patents frequently are wielded by non-practicing entities, who, because they have no interest except to maximize the scope and power of their patents, propound

exceedingly broad interpretations of their claims in an attempt to monopolize commonplace productive activity in a particular field. These patents frequently appear ineligible, obvious, indefinite, or otherwise invalid if construed to cover amici's activities.

Liability for inducing infringement historically has been premised on the accused inducer's knowledge that the acts it encouraged would infringe an enforceable patent. *See, e.g.*, *Wallace* v. *Holmes*, 29 F. Cas. 74, 79-80 (C.C.D. Conn. 1871) (first U.S. case recognizing liability for "inducing" infringement of a patent, and doing so based on the defendant's "express purpose" and "certain knowledge" of infringement). As this Court recognized in *Metro-Goldwyn-Mayer Studios Inc.* v. *Grokster, Ltd.*, 545 U.S. 913 (2005), it is important that the induced infringement doctrine "do[] nothing to compromise legitimate commerce or discourage innovation having a lawful promise." *Id.* at 937. Under the approach advocated by petitioner and the government, inducement liability threatens to stifle innovation by burdening legitimate commerce with costly and abusive patent lawsuits.

There are currently more than 2.3 million U.S. patents in force. *See* World Intellectual Prop. Org., Statistical Country Profiles: United States of America, *available at* http://www.wipo.int/ipstats/en/statistics/country_profile/profile.jsp?code=US. Whenever a technology company introduces a new product or service, or even proposes new ways of using older products or services, there inevitably is a background risk that some facet of the new product, service, or method implicates one or more of these 2.3 million patents. If countless patentees could hold

a productive company liable for inducement simply by sending a notice letter listing various patents and suggesting their "potential relevance" to the activities of the company's *customers* (Pet. Br. 3), or even by offering such patents for sale to any number of companies, innovative firms such as amici would be exposed to potentially massive liability for acts beyond their control, despite the absence of any intent to induce infringement as required by *Global-Tech*.

Wholly apart from the fact that this approach would gut the mental-state element of inducement, the standard propounded by petitioner badly distorts litigants' incentives in patent litigation. It encourages some patent owners who are unwilling or unable to compete in the marketplace to indiscriminately send "notice letters" to all productive companies in the relevant industries, regardless of whether those companies or their customers infringe and regardless of the validity or invalidity of the patents. Such letters are already common, but the rule sought by petitioner would make them engines of strict liability, even for recipients who conduct good faith evaluations of the allegations and reach a different conclusion than a jury or court does. Such a regime self-evidently chills innovation, encourages defendants to cease productive activities (or pay exorbitant rents extorted by the threat of litigation) rather than challenging the validity of dubious patents, and cannot seriously be maintained as promoting the "Progress of . . useful Arts." U.S. Const. art. I, § 8, cl. 8.

As this Court held in *Global-Tech*, inducement liability under 35 U.S.C. § 271(b) requires that "the inducer must persuade another to engage in conduct *that the inducer knows is infringement*." 131 S. Ct.

at 2065 (emphasis added). If the accused inducer reasonably believes that the patent is invalid or not infringed, and therefore that the party it is encouraging could not be liable for direct infringement, then the accused infringer does not act with knowledge that the encouraged party is committing patent infringement. This Court should adhere to its well-reasoned decision in *Global-Tech* and affirm the judgment of the court of appeals.

ARGUMENT

The language of 35 U.S.C. § 271(b) does not specify in explicit terms the mental state required to "actively induce[] infringement," but this Court has squarely held that "intent is required." *Global-Tech Appliances, Inc.* v. *SEB S.A.*, 131 S. Ct. 2060, 2065 (2011) (quotation marks omitted). In order to act with the requisite intent, moreover, the *Global-Tech* Court concluded that the "the inducer must persuade another to engage in conduct that the inducer *knows is infringement*." *Ibid.* (emphasis added). When an alleged inducer in good faith believes that the patent is invalid or not infringed, and thus does not believe that its customers or users can be liable for directly infringing the patent, the alleged inducer does not "know that the induced acts constitute patent infringement." *Id.* at 2063.

This conclusion not only follows inexorably from this Court's explanations of the mental state required for inducement and the relationship between inducement and liability for direct infringement; it also ensures that the patent system fosters, rather than hinders, innovation. Innovators, of necessity, use basic, foundational techniques and technologies

commonly relied on by those working in the field as building blocks for further advances and innovations. Patentees (especially non-practicing entities) frequently accuse innovative companies of infringing patents that the patentees interpret as claiming those essential foundational practices or technologies. If those innovators have a good-faith belief that the claimed fundamental practices are in the prior art, obvious, or otherwise not patent-eligible, they should be able to market the use of their innovations without risking strict liability for patent infringement if a court later concludes that the practice has been validly patented.

I. INDUCEMENT LIABILITY REQUIRES KNOWLEDGE THAT SOMEONE IS DIRECTLY INFRINGING A VALID PATENT.

As this Court repeatedly has explained, "'[t]he inducement rule . . . premises liability on purposeful, culpable expression and conduct.'" *Global-Tech*, 131 S. Ct. at 2067 (quoting *Metro-Goldwyn-Mayer Studios Inc.* v. *Grokster, Ltd.*, 545 U.S. 913, 937 (2005)). The *Grokster* Court correctly observed that "[t]he rule on inducement of infringement as developed in the early cases is no different today": For the sale of a product or service with noninfringing uses to be the basis for inducement liability, the alleged inducer must have the "object of promoting its use *to infringe*." 545 U.S. at 936 (emphasis added). What makes the defendant's intent to encourage infringement "culpable" is the defendant's *knowledge* that the actions induced, once completed, *will constitute an act of infringement*. *Id.* at 937, 940, 941. Thus, in *Global-Tech*, the Court clearly explained *what* an accused inducer must intend: "we now hold that in-

duced infringement under § 271(b) requires knowledge that the induced acts constitute patent infringement." 131 S. Ct. at 2068.

That holding resolves this case, and compels rejection of petitioner's strained attempt to rewrite this Court's precedents. As petitioner and its amici recognize, liability for direct infringement requires that the asserted patent be valid. Pet. Br. 49; *accord*, *e.g.*, U.S. Br. 19; *Lazare Kaplan Int'l, Inc.* v. *Photoscribe Techs., Inc.*, 714 F.3d 1289, 1295 (Fed. Cir. 2013) ("[N]o accused products can be found liable for infringement of an invalid claim."). And inducement liability requires that the predicate conditions for direct infringement be met: "where there has been no direct infringement, there can be no inducement of infringement under § 271(b)." *Limelight Networks, Inc.* v. *Akamai Techs., Inc.*, 134 S. Ct. 2111, 2117 (2014). Inducement liability also requires *knowledge* that the requirements to hold someone liable for direct infringement are met—i.e., that the induced act "constitute[s] patent infringement." *Global-Tech*, 131 S. Ct. at 2068. Thus, without knowledge that the induced acts satisfy each element of a valid patent (*Limelight*, 134 S. Ct. at 2117), the mental-state requirement for inducement liability is not met. Evidence that an accused inducer possesses a good-faith belief that the patent is invalid thus is highly relevant to the question whether the defendant possessed the mental state necessary for inducement liability.

A. *Global-Tech* Unambiguously Held That An Inducer Must Know That The Induced Acts Constitute Patent Infringement.

Four Terms ago, this Court "consider[ed] whether a party who 'actively induces infringement of a patent' under 35 U.S.C. § 271(b) must *know* that the induced acts *constitute patent infringement*." 131 S. Ct. at 2063 (emphasis added). The plain language of Section 271(b) is subject to two possible interpretations, the Court explained—it "may require merely that the inducer lead another to engage in conduct that happens to amount to infringement," or it may "mean that the inducer must persuade another to engage in conduct that the inducer *knows is infringement*." *Id.* at 2065 (emphasis added). The Court noted that "[b]oth readings are possible," but did not suggest that any *other* interpretation of the text also was possible. *Ibid.*

Rather, "[f]inding no definitive answer in the statutory text," the Court set out to determine which of the *two* possible "readings" to adopt. 131 S. Ct. at 2065. The Court thus examined the principles behind inducement, as expressed in its case law on secondary liability. *Id.* at 2065-67. Although the Court did not find a clear answer in the pre-1952 case law, it reiterated its previous holding in *Grokster* that liability for those who do not directly infringe must be grounded on "purposeful, culpable expression and conduct." *Id.* at 2067 (quoting *Grokster*, 545 U.S. at 937).

The Court then explained that *Aro Manufacturing Co.* v. *Convertible Top Replacement Co.*, 377 U.S. 476 (1964) ("*Aro II*"), had provided an answer in the

context of contributory infringement that was compatible only with the second possible interpretation, because "a violator of § 271(c) must know that the combination for which his component was especially designed was both patented and infringing." *Global-Tech*, 131 S. Ct. at 2067 (quotation marks omitted). Because that requirement, which *Aro II* explicitly recognized, demands a greater degree of knowledge for secondary liability than would the first possible interpretation of Section 271(b), only the second possible interpretation could hew to the standard for contributory infringement.

The Court thus concluded that the second possible reading was correct: "[W]e now hold that induced infringement under § 271(b) requires knowledge that the induced acts *constitute patent infringement*." 131 S. Ct. at 2068 (emphasis added).

Petitioner attempts to elide this explicit "hold[ing]" (131 S. Ct. at 2068), arguing principally that *Global-Tech* repeatedly mentioned that knowledge of the existence of a patent was required, and relied on cases so holding. Pet. Br. 17-28. But *Global-Tech* never stated that notice of a patent was *sufficient* in itself to satisfy the mental-state requirement of Section 271(b). Instead, the standard announced in *Global-Tech* requires "knowledge that the induced acts constitute patent infringement." 131 S. Ct. at 2068.

To be sure, notice of a patent is *one* necessary component of that standard: A defendant cannot know that the induced acts are patent infringement if the defendant does not know that the patent exists

at all. But *Global-Tech* requires more than mere knowledge of a patent's existence.

Global-Tech addressed whether, viewing the evidence "in the light most favorable to" the patentee, a jury could conclude that the accused inducer in that case sufficiently knew "the infringing nature of the sales it encouraged [the direct infringer] to make." 131 S. Ct. at 2071. The Court held that the inducer's "willful blindness" to the fact that the product was covered by a valid patent sufficed. *Id.* at 2070-71. The Court found that the inducer there had "willfully blinded itself to the infringing nature of [the direct infringer]'s sales," as demonstrated by the inducer's decision to copy a product without investigating whether the product it copied was patented and, if so, whether that patent was valid—but instead to blind itself to that information by making a "decision not to inform the attorney from whom [it] sought a right-to-use opinion that the product to be evaluated was simply a knockoff of [the patentee]'s deep fryer." *Id.* at 2071-72.

Contrary to petitioner's suggestion, *Global-Tech*'s adoption of the willful-blindness standard does not "mak[e] it . . . *easier* to satisfy the intent requirement for inducement where the defendant lacks actual knowledge of the patent." Pet. Br. 24 n.4. The infringer in *Global-Tech* copied a product it had specifically selected for copying because it did not contain patent markings. 131 S. Ct. at 2071. In so doing, the infringer willfully blinded itself to *every* material fact about the patent: its existence, its applicability to the infringer's product, and its validity. *Ibid.* Rather than investigating *any* of these issues, the infringer took "deliberate actions" to avoid learning

them. *Id.* at 2070. And the infringer's decision to copy a "superior product" whose sales "had been growing for some time" (*id.* at 2071) suggested that the infringer knew there was "a high probability" that the copied product was validly patented (*id.* at 2070).

Indeed, the *Global-Tech* Court made this point explicit, in a manner that conclusively forecloses petitioner's attempted reinterpretation. In explaining why it deemed the dissent's concerns about the willful-blindness standard unpersuasive, the Court observed that promotion of technological progress does not require protecting parties from inducement liability when they "actively encourage others to violate patent rights" and "take deliberate steps to remain ignorant of those rights despite a high probability that the rights exist *and are being infringed*." 131 S. Ct. at 2069 n.8 (emphasis added). The only plausible reading of that passage is that it recognizes the need for inducement plaintiffs to prove that the defendant actually knew, or was willfully blind to, the fact of infringement. The Court then confirmed this understanding of the degree of willful blindness required for liability, concluding that the defendant in that case was liable because it "willfully blinded itself to *the infringing nature* of the sales it encouraged." *Id.* at 2071 (emphasis added). *Global-Tech* thus makes clear that the willful-blindness standard, like the knowledge requirement itself, requires proof that the defendant's culpable mental state encompasses not merely the existence of the patent but "the infringing nature" of the induced acts.

Nothing less suffices to establish inducement liability. Circumstances that might permit one to ar-

gue that a defendant had *knowledge of a patent* are not remotely sufficient to demonstrate that the defendant knew that some act it had encouraged would infringe that patent. Prior to *Global-Tech*, the Federal Circuit held that evidence that a handful of a corporation's 90,000 employees had received a spam marketing email that mentioned the relevant patent number is sufficient to demonstrate the defendant's knowledge of the patent. *See i4i Ltd. P'ship* v. *Microsoft Corp.*, 598 F.3d 831, 851 (Fed. Cir. 2010), *aff'd on other grounds*, 131 S. Ct. 2238 (2011). And other courts even permitted a citation to the asserted patent in the file history of any one of the defendant's thousands of patents and patent applications to establish the defendant's knowledge of that patent (and presumably every other patent similarly cited). *See Veritas Operating Corp.* v. *Microsoft Corp.*, 562 F. Supp. 2d 1141, 1277 (W.D. Wash. 2008).

There simply is no reasonable chain of inferences that could allow a jury to infer from the mere fact that the patent-in-suit had been cited by the PTO in the file history of one of the defendant's patent applications that the defendant read and analyzed the cited patent and developed actual knowledge that one or more of the thousands or millions of actions it was facilitating in the course of its business infringed one or more of the valid claims of the patent. Allowing evidence of mere knowledge of a patent to suffice to establish knowledge of infringement thus would effectively eviscerate *Global-Tech*.[2]

---

[2] This case does not present the question—but it is also important to adhere to the pre-1952 understanding, codified in Section 271(b)—that the "knowledge" of a mere employee can-

Petitioner's attempts to read this Court's other precedents as undermining *Global-Tech*'s clear holding are unavailing. *Aro II* did not decide that the intent requirement could be met by mere knowledge of a patent's existence. Instead, it made clear that knowledge of a patent was *required* for contributory infringement, not that such minimal notice would be *sufficient*. 377 U.S. at 488. And, in fact, the holding of *Aro II* is that "§ 271(c) does require a showing that the alleged contributory infringer *knew* that the combination for which his component was especially designed was *both* patented *and infringing*." *Ibid.* (emphases added). That holding follows directly from the most natural reading of the contributory infringement subsection, which requires that the accused contributor "know[]" its product "to be especially made or especially adapted for use *in an infringement of such patent*." 35 U.S.C. § 271(c) (emphasis added).

Petitioner reads much into *Aro II*'s explanation that the accused contributory infringers had "no defense with respect to" sales made after they received a letter notifying them that "anyone selling ready-made replacement fabrics for these automobiles would be guilty of contributory infringement of said patents." 377 U.S. at 490 (quotation marks omitted); Pet. Br. 21-28. But the defendants in *Aro II* had not asserted that they believed the letter to be wrong.

---

not be imputed to a corporate defendant. In *Cortelyou* v. *Charles Eneu Johnson & Co.*, 207 U.S. 196 (1907), this Court held that notice to the defendant's employee was not attributable to the defendant for purposes of inducement liability because the employee "was not an officer or general agent of the defendant company." *Id.* at 201.

Given the absence of any claim that the letter did not suffice to establish the defendants' knowledge that a valid patent was being infringed, there was no need to require further proof of the defendants' culpable knowledge. *See Aro II*, 377 U.S. at 488 (the issue was "not noticed by the parties," and thus not raised by the petitioners—the accused contributory infringers—as a ground for reversal).

Petitioner's reading of *Aro II* also ignores the difference between the situations addressed by contributory infringement and inducement. "Before 1952, both the conduct now covered by § 271(b) (induced infringement) and the conduct now addressed by § 271(c) (sale of a component of a patented invention) were viewed as falling within the overarching concept of 'contributory infringement.'" *Global-Tech*, 131 S. Ct. at 2066. These "complementary provisions together codif[ied] the basic principles of contributory infringement developed by the courts before 1952." Donald S. Chisum, 5 *Chisum on Patents* § 17.04[3] (punctuation omitted). Section 271(b) codified the aiding-and-abetting liability branch of pre-1952 "contributory infringement," while Section 271(c) reflected the "usual situation in which contributory infringement arises" (S. Rep. No. 82-1979, at 8 (1952) ("Senate Report"))—that is, when one sells a product that is "especially made . . . for use in an infringement." 35 U.S.C. § 271(c).

Unlike Section 271(b), Section 271(c) allows imposition of liability even in the absence of direct evidence that the defendant intended its article to be used in an infringing way. Under Section 271(c), the defendant's "intent to infringe" is conclusively "imput[ed]" from the fact that the defendant knows that

its article "is good for nothing else but infringement." *Grokster*, 545 U.S. at 932 (internal quotation marks omitted). This Court has been clear, however, that such unlawful intent can be ascribed to the defendant only when the "alleged contributory infringer *knew* that the combination for which his component was especially designed *was both patented and infringing*." *Aro II*, 377 U.S. at 488 (emphases added). In that situation, there is "no injustice in presuming or imputing an intent to infringe" under Section 271(c). *Grokster*, 545 U.S. at 932. When one sells a product with knowledge that it is "good for nothing else but infringement," the obvious and inevitable consequence of that sale is that the product will be put to its intended, infringing purpose. *Ibid.* (internal quotation marks omitted).

But there can be no liability under Section 271(c) for the sale of a product that has substantial noninfringing uses—a "staple article or commodity of commerce." 35 U.S.C. § 271(c). This exclusion was incorporated into Section 271(c) "to deny patentees control over staple goods used in their inventions." *Dawson Chem. Co.* v. *Rohm & Haas Co.*, 448 U.S. 176, 200-01 (1980). Secondary liability in connection with the sale of staple articles of commerce—e.g., a general-purpose computer component—accordingly can be imposed only under Section 271(b). *See Grokster*, 545 U.S. at 935 n.10.

Thus, *Aro II*—which addressed contributory infringement—does not set the ceiling on the mental-state requirement for inducement. Because Section 271(b) can apply when an accused infringer sells a staple good, whereas Section 271(c) requires that the item be especially made to infringe, Congress re-

quired *a greater* mental-state showing for secondary liability under Section 271(b) so as to ensure patentees were not granted "control of staple goods." *Dawson Chem.*, 448 U.S. at 201. As one of the drafters of the 1952 Act explained, in the course of distinguishing Section 271(b) and Section 271(c), "to make out a case of active inducement under paragraph (b)" based on the sale of a staple article of commerce, "*something more than mere knowledge of an intended infringing use* would have to be shown." P.J. Federico, *Commentary on the New Patent Act*, 75 J. Pat. & Trademark Off. Soc'y 161, 214 (1993) (reprinted from Title 35, United States Code Annotated (West 1954)) (emphasis added). And this Court echoed that solicitude for preserving competition in the sale of staple goods, stating that liability for active inducement requires "evidence [that] *goes beyond* a product's characteristics or the *knowledge that it may be put to infringing uses*, and shows statements or actions directed to promoting *infringement*." *Grokster*, 545 U.S. at 935 (emphases added).

If Section 271(b) did not require knowledge that the induced acts constitute patent infringement, patentees would have little incentive ever to bring suits under Section 271(c): Defendants would be liable as inducers without any need to show that their products lack noninfringing uses. This result cannot possibly be squared with the prior case law or with Congress's understanding that Section 271(c) addressed the "usual situation" in which secondary liability would arise. Senate Report at 8; *see also Grokster*, 545 U.S. at 932.

The structural relationship between Sections 271(b) and 271(c) requires that liability under *either*

provision be imposed only when the defendant had actual knowledge that the underlying acts constitute patent infringement, and that liability under Section 271(b)—precisely because it can restrain distribution of staple products with a vast multitude of noninfringing uses—may be imposed only when the defendant *also* took affirmative steps to encourage a use it knew to be patent infringement.

None of the cases cited by petitioner undermines the requirement that the accused inducer must know that the induced acts constitute patent infringement. Knowledge of infringement was not disputed in *Grokster*; it was incontrovertible in that case that the online service providers knew they were facilitating massive amounts of copyright infringement. *See* 545 U.S. at 920 ("individual recipients of Grokster's and StreamCast's software . . . have prominently employed those networks in sharing copyrighted music and video files without authorization"). These underlying acts of copyright infringement were clear and undeniable. But in patent cases, direct infringement is often not so clearly defined. Whether an asserted patent is valid and infringed may turn on complex issues of claim construction that (in light of this Court's decision in *Teva Pharmaceuticals USA, Inc.* v. *Sandoz, Inc.*, 135 S. Ct. 831, 837 (2015)) may require resolution of disputed factual questions. And patent claims today are often vague, overbroad, or both—"[b]road, to the point of inherently ambiguous"—such that it can be extraordinarily difficult to determine the scope of the claimed invention from a review of the patent. *Enzo Biochem, Inc.* v. *Applera Corp.*, 605 F.3d 1347, 1348 n.2 (Fed. Cir. 2010) (Plager, J., dissenting from denial of panel rehear-

ing). In part for that reason, liability for inducing infringement of a patent always has required knowledge of infringement.

Cortelyou affords petitioner no support. *Contra* Pet. Br. 26-27. In that case, the defendant had supplied ink to a customer for use in a patented duplicating machine that the customer had purchased from the patentee, subject to a license prohibiting the use with the machine of any ink other than that sold by the patentee. 207 U.S. at 198-99. The question presented was whether the defendant was liable for induced infringement on these facts. *Id.* at 199. There was no dispute that the machine at issue was subject to the patent and to the restriction prohibiting use with the defendant's ink. The Court nonetheless held that there could be no secondary liability because there was "no sufficient evidence of notice" to the accused inducer that the use of its ink by the purchaser was a breach of the purchaser's license agreement and therefore constituted infringement. *Id.* at 200. *Cortelyou* thus involved the question of the mental state necessary to support potential liability for inducing violation of a license restriction applicable to an indisputably patented product; its only relevance here is that it confirms the fundamental point that there can be no inducement liability absent knowledge of patent infringement.

A few years later, this Court faced a factually similar case, except that the ink seller did have notice of the license and sold the ink (1) with "knowledge that under the license [the license holder] could not use the ink . . without *infringement*," and (2) with the expectation that the ink would be used in the patented machine. *Henry* v. *A.B. Dick*

Co., 224 U.S. 1, 49 (1912) (emphasis added), *overruled on other grounds by Motion Picture Patents Co.* v. *Universal Film Mfg. Co.*, 243 U.S. 502 (1917); *see also Ill. Tool Works Inc.* v. *Indep. Ink, Inc.*, 547 U.S. 28, 33-34 (2006). On those facts the Court found the ink seller liable for what was then known as "contributory infringement" (but would, under modern terminology, be viewed as active inducement). *A.B. Dick*, 224 U.S. at 48 (quotation marks omitted). The Court rejected the proposition that secondary liability for infringement could be based solely on the sale of a staple article that could be put to "an infringing use." *Ibid.* The Court held instead that there must be an "intent and purpose that the article sold will be so used." *Ibid.* Thus, contrary to petitioner's interpretation (Pet. Br. 25-26), *A.B. Dick* required knowledge that the induced acts would constitute patent infringement.

Petitioner also ignores the myriad pre-1952 cases holding that "active inducement" requires a purpose to infringe. For example, in the first case to use the phrase, the so-called "Button-Fastener Case," the Sixth Circuit considered a charge that defendants "actively induced" infringement by persuading plaintiff's customers "to infringe . . . with the malicious purpose of causing them to violate their licenses." *Heaton-Peninsular Button-Fastener Co.* v. *Eureka Specialty Co.*, 77 F. 288, 297 (6th Cir. 1896). The court allowed the charge to stand because "[i]t is the *knowledge* that the [goods] made and sold by defendants are to be used *for the purpose of infringing*, coupled with the active intent that they shall be so used, which . . constitutes contributory infringement." *Ibid.* (emphases added).

Proof that the accused inducer had knowledge that the use it encouraged was infringing is thus essential to the imposition of liability under Section 271(b). Imposing liability solely on the basis of a defendant's encouragement of an act that turns out to infringe a valid patent (but was not known to do so *ex ante*) essentially converts Section 271(b) into a strict liability statute, much like Section 271(a). Whatever the merit of holding persons strictly liable for the infringing products they themselves make, use, or sell, and for the infringing methods they themselves perform, there is simply no warrant in law or policy for imposing strict liability on a producer of staple articles of commerce in the absence of culpable intent. Congress made that policy judgment in 1952, and it is even more justified today, as the capabilities and uses of the fundamental building blocks of modern technological advances—microprocessors, operating systems, Internet portals, and the like—continue to expand at exponential rates and in unpredictable ways.

B. A Defendant Who Encourages Another In The Good-Faith Belief That The Patent Is Invalid Does Not Know That The Acts He Encourages Constitute Patent Infringement.

Global-Tech requires that an accused inducer know that "the induced acts constitute patent infringement"—i.e., that the induced acts would support liability for direct infringement under Section 271(a). 131 S. Ct. at 2068. And just last Term, this Court held that to "constitute infringement" under Section 271(a), "all the steps" claimed in the patent must be "carried out." *Limelight*, 134 S. Ct. at 2117.

As petitioner admits, "there can be no liability for infringement of an invalid patent." Pet. Br. 49 (emphasis omitted); *accord* U.S. Br. 19 ("[I]f the patent is actually found to *be* invalid, neither the direct infringer nor the person who induces that infringement can be held liable under the Patent Act."). "[A]n *invalidated* patent carries with it no such right" to exclude. *FTC* v. *Actavis, Inc.*, 133 S. Ct. 2223, 2231 (2013). To serve as the basis for an infringement finding, therefore, a patent must meet "the conditions and requirements" of patentability Congress set forth. 35 U.S.C. § 101.

Because a defendant cannot be liable for inducing an "action that did not violate the plaintiff's legal rights" (*Limelight*, 134 S. Ct. at 2119), and performing all the steps of an *invalid* patent does not violate the plaintiff's legal rights, a defendant cannot be liable for inducement unless the patent is valid. Thus, petitioner recognizes that one cannot induce infringement of an invalid patent because "a finding of invalidity" implies that there can be "no liability" for infringement. Pet. Br. 36.[3]

---

[3] That a court is *capable* of determining separately whether a patent is valid and whether all of its elements have been performed by one actor (Pet. Br. 46-50; U.S. Br. 19-26) is of no moment. In many contexts, courts can determine whether one necessary liability element has been met separately from determining whether another element is also met. It may make sense for courts to address some issues before others, or to leave determinations on certain issues standing even if not strictly necessary to the judgment. Those are prudential decisions, governed by the relative "difficult[y]" of resolving the issues and other "countervailing concerns." *Cardinal Chem. Co.* v. *Morton Int'l, Inc.*, 508 U.S. 83, 99 (1993). They do not imply that a defendant can know that he is infringing a plaintiff's legal right

But inducement also requires "conduct that the inducer *knows is infringement*." *Global-Tech*, 131 S. Ct. at 2065 (emphasis added). Because performing all the elements of a valid patent claim—and *only* performing all the elements of a valid patent claim—is direct patent infringement, inducement requires knowledge that the induced acts meet that definition. Put another way, an inducer must not only "violate the plaintiff's legal rights," but *know* that he violated the plaintiff's legal rights. *Limelight*, 134 S. Ct. at 2119.

This conclusion is bolstered by evidence that, in enacting Section 271(b), Congress equated "actively inducing" with civil "aiding and abetting" liability, which itself requires knowledge that the underlying conduct is a legal breach of duty. The Senate Report, in discussing Section 271, states that "[p]aragraph (b) recites in broad terms that one who aids and abets an infringement is likewise an infringer." Senate Report at 8. The report later says that "[o]ne who actively induces infringement as by aiding and abetting the same is liable as an infringer." *Id.* at 28. The House Report uses identical language. H.R. Rep. No. 82-1923, at 9, 28 (1952). Thus, the basic understanding of Congress was that "actively inducing infringement" was similar to "aiding and abetting infringement"—and this codified meaning controls today.

Civil aiding-and-abetting liability, as invoked by Congress in enacting Section 271(b), requires actual knowledge of the rights violated. Section 876(b) of

---

without knowing that the plaintiff has such a right in the first place.

the First Restatement of Torts (which is the relevant treatise for purposes of establishing the common-law backdrop to the 1952 Patent Act, *see Field* v. *Mans*, 516 U.S. 59, 70 (1995)) states that a third party is liable for another's breach of duty "if he . . . *knows* that the other's conduct *constitutes a breach of duty* and gives substantial assistance or encouragement to the other." Restatement (First) of Torts § 876(b) (1939) (emphasis added). Knowledge of the wrong—here, knowledge of infringement—thus was a prerequisite to civil aiding-and-abetting liability at the time Section 271(b) was enacted.[4]

That patent validity may sometimes ultimately be a question of law does not change this knowledge requirement. In tort, for example, "the existence and scope or range of [a] duty" is "an issue of law for the court." 57A Am. Jur. 2d *Negligence* § 78. To be liable as an inducer in tort, however, the defendant must know the answer to that legal question—he must know that the induced action "constitutes a breach of duty." Restatement (First) of Torts § 876(b).

In other contexts as well, a defendant's belief about legal issues often is relevant to whether the

---

[4] The First Restatement of Torts, rather than the Second, supplies the pertinent standard. The "pre-1952 case law" is the relevant body of precedent (*Global-Tech*, 131 S. Ct. at 2066), and the First Restatement reflects the common-law doctrine that Congress was codifying in 1952. *See* 2B Norman J. Singer & J.D. Shambie Singer, *Statutes and Statutory Construction* § 50:2 (7th ed. 2012). Moreover, "modern Restatements" do not always accurately "describ[e]" even "the current state of the law." *Kansas* v. *Nebraska*, No. 126, Orig., slip op. at 1 (U.S. Feb. 24, 2015) (Scalia, J., concurring in part and dissenting in part).

defendant can satisfy a scienter requirement. For example, this Court has interpreted statutory language requiring that a defendant "knowingly" act in a manner "not authorized by [the statute] or the regulations" as requiring that the defendant "knew that his [conduct] was in a manner unauthorized by statute or regulations." *Liparota* v. *United States*, 471 U.S. 419, 420, 433 (1985) (quotation marks omitted). Indeed, even statutes requiring only "willful" conduct, which is satisfied by mere recklessness rather than actual knowledge in the civil context (*Safeco Ins. Co. of Am.* v. *Burr*, 551 U.S. 47, 57 (2007)), necessitate proof that the defendant's culpable mental state extends to the question whether the conduct at issue violates the law. *See, e.g.*, *id.* at 69; *McLaughlin* v. *Richland Shoe Co.*, 486 U.S. 128, 132-35 (1988); *Trans World Airlines, Inc.* v. *Thurston*, 469 U.S. 111, 125-28 (1985).

Petitioner argues that a defendant who has not practiced the patent need only "kn[o]w of the patent's *potential* applicability"—a requirement satisfied by receipt of "a notice letter"—to be liable for inducement. Pet. Br. 14 (emphasis added). But "potential applicability" does not suffice, even for the lesser standard of willfulness. *Thurston*, 469 U.S. at 127-28; *McLaughlin*, 486 U.S. at 132-33. In *McLaughlin*, for example, the Court expressly rejected the suggestion that a defendant's knowledge that the potential for statutory liability "'was in the picture'" could suffice to establish recklessness. 486 U.S. at 132 (citation omitted). *A fortiori*, such knowledge is insufficient to establish actual knowledge of infringement. Liability for actual inducement requires proof that the defendant *at least* had knowledge that the patent

claims validly cover the particular acts the defendant allegedly encouraged.

II. Expanding Secondary Liability To Reach Those Who Act With A Good-Faith Belief Of Invalidity Would Stifle Competition And Innovation.

An accused inducer who believes in good faith that the asserted patent is invalid lacks the intent to infringe required by *Global-Tech*. This result advances the constitutionally mandated goal of the patent system: promotion of the "Progress of . . . useful Arts." U.S. Const. art. I, § 8, cl. 8. An innovative technology company that does not practice the patent should not be held liable when it, in good faith, encourages others to practice a patent it believes invalid.

The modern realities of patent litigation often make it impossible for productive companies, especially technology companies, to operate without fear of infringement lawsuits. There are over 2.3 million U.S. patents in force. *See* World Intellectual Prop. Org., Statistical Country Profiles: United States of America, *available at* http://www.wipo.int/ipstats/en/statistics/country_profile/profile.jsp?code=US. Many of these patents are invalid under current law. For decades, the USPTO had applied standards that have since been overruled or materially clarified by recent case law. For example, the USPTO granted numerous patents on computer-implemented abstract ideas in reliance on *State Street Bank & Trust Co.* v. *Signature Financial Group*, 149 F.3d 1368 (Fed. Cir. 1998). Last Term, this Court clarified that computer-implemented claims drawn to abstract ideas, such as fundamental economic practices, are patent-ineligible under 35 U.S.C. § 101. *Alice Corp.*

Pty. v. *CLS Bank Int'l*, 134 S. Ct. 2347 (2014). Only since *Alice* has the USPTO begun to reject some abstract patents in the computer field. *See* USPTO, 2014 Interim Guidance on Patent Subject Matter Eligibility, 79 Fed. Reg. 74,618 (Dec. 16, 2014).

In addition, many patents issued before this Court's decision in *KSR International Co.* v. *Teleflex Inc.*, 550 U.S. 398 (2007), were obvious under 35 U.S.C. § 103 but erroneously allowed based on "a formalistic conception of the words teaching, suggestion, and motivation, or by overemphasis on the importance of published articles and the explicit content of issued patents." *Id.* at 418. And commentators have suggested that the USPTO erroneously granted numerous indefinite claims before this Court decided *Nautilus, Inc.* v. *Biosig Instruments, Inc.*, 134 S. Ct. 2120 (2014). *See, e.g.*, Lisa Larrimore Ouellette & Jonathan Masur, *How Will* Nautilus *Affect Indefiniteness at the PTO?*, PatentlyO (June 5, 2014), http://patentlyo.com/patent/2014/06/nautilus-affect-indefiniteness.html.

Patents issued before *Alice*, *KSR*, or *Nautilus* that appear invalid under at least one of those precedents share a common flaw: They purport to monopolize inventions of abstract, broad, or uncertain scope. That vice makes them particularly useful tools for non-practicing entities to wield against large numbers of productive companies that develop and market new and innovative technologies. In implementing their new ideas and bringing products to market, innovators often need to use foundational practices and technologies. Thus, productive technology companies—the companies that provide the products and services that constantly make our lives easier and more enjoyable, and that in the process

foster economic growth and create jobs—commonly find themselves accused of encouraging the infringement of numerous patents of dubious validity.

Just as an innovator's good-faith belief that its technologies do not practice a patent shields it from liability for indirect infringement, if an innovator has a good-faith belief that the claimed technologies and practices are in the prior art—or only predictably different from the prior art—the innovator should be able to market its product without risking secondary liability for patent infringement. *See KSR*, 550 U.S. at 417. The same is true if the innovative company finds itself threatened with a lawsuit accusing it of infringing a patent that appears to claim an abstract idea: The company should be able to encourage others to use its innovation rather than finding itself, and everyone else in the industry, chilled from launching its product in fear of accruing inducement damages. *See Alice*, 134 S. Ct. at 2357.

Similarly, if the threatened patent does not appear sufficiently clear to provide reasonable certainty regarding its metes and bounds, the company should not be coerced into ceasing all promotion and user support for its products so as to avoid potential inducement liability. The risk of uncertainty should fall on the patentee, not on the accused inducer (often skilled in the art) who lacks reasonable certainty regarding the patent's scope and validity. *See Nautilus*, 134 S. Ct. at 2129. "[B]ecause so many patents are invalid, . . . it is not reasonable to assume that merely because a defendant is aware of the existence of a patent, he intended to infringe it." Mark A. Lemley, *Inducing Patent Infringement*, 39 U.C. Davis L. Rev. 225, 243 (2005).

Indeed, patentees are in the best position to ensure that their patents validly claim and clearly define the subject matter of their inventions. Thus, as between defendants and patentees, the consequences of uncertainty and complexity in assessing whether a patent is valid should fall on patentees, particularly in light of the principle that "the public . . . has a paramount interest in seeing that patent monopolies . are kept within their legitimate scope." *Medtronic, Inc.* v. *Mirowski Family Ventures, LLC*, 134 S. Ct. 843, 851 (2014) (quotation marks omitted).

When it is unclear whether a patent is valid, the law should encourage competitors to enter the market and challenge the patent. Because "[i]nvalid or overbroad patents disrupt" the "proper balance between exclusivity and competition" by "discouraging follow-on innovation, preventing competition, and raising prices through unnecessary licensing and litigation," FTC, *The Evolving IP Marketplace: Aligning Patent Notice and Remedies with Competition* 1 (2011), it is patentees—not competitors—that should bear the risk of uncertain validity. *See* Timothy R. Holbrook, *The Intent Element of Induced Infringement*, 22 Santa Clara Computer & High Tech. L.J. 399, 408 (2006) (allowing market entry upon a belief of invalidity is "pro-competitive").

Permitting market participation upon showing a good-faith belief in invalidity also improves the patent system itself, by "creat[ing] incentives to challenge otherwise potentially invalid patents" (Holbrook, *supra*, at 408), challenges that this Court has recognized have great "importance to the public at large." *Cardinal Chem.*, 508 U.S. at 100. When good-faith belief in invalidity is relevant to liability, potential inducers have additional incentive to thor-

oughly investigate any patent allegedly infringed by the induced conduct prior to the commencement of an infringement suit. And if that investigation shows that the patent might be invalid on one or more grounds, it will be in the accused inducer's interest to bring those grounds promptly to the attention of USPTO, a court, or both, not only in the hopes of invalidating the patent but also to create an evidentiary record that it had a good-faith belief that the asserted patent was invalid. These challenges have proven critical to weeding out invalid patents. For example, 77 percent of final Inter Partes Review decisions invalidate *all* claims under review. Brian J. Love & Shawn Ambwani, Inter Partes *Review: An Early Look at the Numbers*, 81 U. Chicago L. Rev. Dialogue 93, 94 (2014).

The result is prompt, thorough investigation of precisely those patents most deserving of it—patents of dubious validity being asserted to exclude businesses from a market. But that incentive to try to cull the "patent thicket" is diminished when an investigation that has ripened into a good-faith belief that a patent is invalid is not even relevant to a claim that a business knowingly induced another's infringement of a valid patent.

Patentees should not be able to subject third parties who do not even practice the relevant patents to potentially ruinous liability, simply by sending hundreds or thousands of notice letters suggesting the potential relevance of countless patents whose applicability, scope, or validity is dubious—as petitioner advocates, *see* Pet. Br. 3, 14, 16. This is not only because patent claims often reflect a convoluted combination of legal and technical jargon, *see Markman* v. *Westview Instruments, Inc.*, 517 U.S. 370, 389

(1996), but also because patents often are drafted in a purposefully vague manner, precisely because vague claims can aid the patentee in litigation. Christopher A. Cotropia, *The Folly of Early Filing in Patent Law*, 61 Hastings L.J. 65, 117 (2009).

One reason that an ability to draft such "inherently ambiguous" claims is "a prized talent" is that vague patents that may appear narrow when prosecuted can, once granted, be wielded broadly in infringement suits. *Enzo Biochem*, 605 F.3d at 1348 n.2 (Plager, J., dissenting from denial of panel rehearing). As a result of this strategic motte-and-bailey claim drafting, oftentimes a productive technology company faced with an accusation of patent infringement will believe in good faith that its product does not infringe the patent, if the patent is construed narrowly to avoid the prior art; but that, if the patent is construed broadly enough to reach the accused product, then it is invalidated by prior art. *See, e.g.*, Appellees Br. 38, *Calypso Wireless, Inc.* v. *T-Mobile USA, Inc.*, 586 F. App'x 707 (Fed. Cir. 2014) (per curiam). In these circumstances, belief in noninfringement and invalidity run together—and a standard that elevates a belief in noninfringement over a belief in invalidity will be incoherent.

Petitioner's and the government's solution is to eliminate the need to prove *any* knowledge of infringement—including validity—in favor of allowing patentees to "confer the requisite knowledge on the inducer" (U.S. Br. 18) by having a "discussion" with the accused inducer or sending it "a notice letter" informing it of the patent (Pet. Br. 16). Under that approach, such commonplace notice letters—and the vague, abstract, or overbroad patents upon which they often rely—would chill innovation. The threat

of patent lawsuits, even if never actually filed, can cause companies to divert their investments from the most efficient technologies to alternatives that carry less benefit but also less risk of facing patent liability. *See, e.g.*, James Bessen, Jennifer Ford & Michael J. Meurer, *The Private and Social Costs of Patent Trolls*, Regulation, Winter 2011-2012, at 26, 31; James Bessen, *The Evidence Is In: Patent Trolls Do Hurt Innovation*, Harv. Bus. Rev., July 2014, *available at* https://hbr.org/2014/07/the-evidence-is-in-patent-trolls-do-hurt-innovation (collecting recent research).

This risk is especially acute for start-ups: The threat of a patent lawsuit can chill investment, and patentees can time their lawsuits to capitalize on this vulnerability. *See, e.g.*, Catherine Tucker, *The Effect of Patent Litigation and Patent Assertion Entities on Entrepreneurial Activity*, at 4-5 (MIT Sloan School Working Paper 5095-14, 2014), *available at* http://ssrn.com/abstract=2457611. When companies can instead respond to notice letters by researching and relying on a good-faith belief in the invalidity of the asserted patents, patentees are forced to be more scrupulous about making infringement accusations and companies can proceed to market their accused products without undue fear.

Moreover, adhering to *Global-Tech*'s requirement of knowledge that the induced acts give rise to patent liability will not unfairly constrain the legitimate enforcement rights of patentees or undermine the value of clearly valid patents. As an initial matter, in every case of induced infringement, a patentee has available to it the option of seeking relief against the direct infringer under a standard of strict liability. *Global-Tech*, 131 S. Ct. at 2065 n.2. Because "a di-

rect infringer's knowledge or intent is irrelevant," the patentee can prove its case by showing nothing more than "the unauthorized use of a patented invention." *Ibid.* But if a patentee elects to sue third parties under a theory of secondary liability, it must do so under a "fault-based" regime. *Grokster*, 545 U.S. at 934.

Imposing liability upon those who do *not* use a patented invention can be justified only in "instances of more acute fault than the mere understanding that some of one's products will be misused"—i.e., used in a manner that happens to infringe. *Grokster*, 545 U.S. at 932-33. As *Global-Tech* establishes, the "fault-based" regime of inducement liability requires that the defendant know that the induced conduct infringes a valid patent. Under this rubric, where a defendant has good basis to question a patent's validity, it is entirely appropriate to demand that the patentee, in proving that the accused inducer knew that the induced conduct infringes, establish also that the accused inducer had no reasonable belief that the asserted patent is invalid. And where there is no objectively reasonable basis for challenging its validity, the patentee will prevail—perhaps as a matter of law.

But patents of "suspect validity" frequently are pressed in litigation and it is precisely those patents that are most harmful to innovation. *eBay Inc.* v. *MercExchange, L.L.C.*, 547 U.S. 388, 397 (2006) (Kennedy, J., concurring). For example, a patent that appears to claim an abstract idea with no "inventive concept" will "foreclose[]" much "future innovation," in exchange for a relatively miniscule "contribution of the inventor." *Mayo Collaborative Servs.*

v. *Prometheus Labs., Inc.*, 132 S. Ct. 1289, 1294, 1303 (2012) (quotation marks omitted). So too with patents on obvious inventions, which "stifle, rather than promote, the progress of useful arts." *KSR*, 550 U.S. at 427. Precluding inducement liability with respect to patents that defendants believe in good faith to fall in these categories is fully consistent with the promotion of innovation in the "useful Arts." U.S. Const. art. I, § 8, cl. 8.

Finally, the mental-state requirement for inducement operates only as long as liability for patent infringement with respect to the induced acts is in doubt. Should a patentee establish with finality that the induced conduct does infringe a valid patent, then forward-looking relief may be available immediately, because from that point forward the defendant would know that it is inducing infringement of a valid patent. In that circumstance, "there is no reason to shield [the accused inducer] from prospective relief." Holbrook, *supra*, at 406.

This system of liability thus provides patentees who truly believe that their patents are valid and infringed with incentives to sue, and bring the case expeditiously to conclusion. Unscrupulous nonpracticing entities who use dubious patents to sue productive companies in the hopes of coercing them into settling rather than incurring the enormous expense of patent litigation, however, will derive less benefit from their lawsuits. *See, e.g.*, Robin Feldman, *Patent Demands & Startup Companies: The View from the Venture Capital Community*, at 4-5 (UC Hastings Research Paper No. 75, 2013), *available at* http://ssrn.com/abstract=2346338. That is how "rules of fault-based liability" *should* operate (*Grok-*

ster, 545 U.S. at 934)—as a sometimes necessary but always circumscribed tool to stop clear infringements, without imposing secondary liability on those who neither themselves infringe nor encourage activity that they know "constitute[s] patent infringement" (*Global-Tech*, 131 S. Ct. at 2068).

CONCLUSION

The judgment of the Federal Circuit should be affirmed.

Respectfully submitted.

THOMAS G. HUNGAR
Counsel of Record
MATTHEW D. MCGILL
GIBSON, DUNN & CRUTCHER LLP
1050 Connecticut Avenue, N.W.
Washington, D.C. 20036
(202) 955-8500
thungar@gibsondunn.com

ALEXANDER N. HARRIS
GIBSON, DUNN & CRUTCHER LLP
555 Mission Street, Suite 3000
San Francisco, CA 94105
(415) 393-8264

Counsel for Amici Curiae EMC Corporation, Acushnet Company, CTIA – The Wireless Association, Dell Inc., Dropbox, Inc., Facebook, Inc., Garmin International, Inc., Hewlett-Packard Company, Intel Corporation, QVC, Inc., Red Hat, Inc., SAS Institute Inc., Symmetry LLC, VIZIO, Inc., and Xilinx, Inc.

PAUL T. DACIER
KRISHNENDU GUPTA
WILLIAM R. CLARK
THOMAS A. BROWN
EMC CORPORATION
176 South Street
Hopkinton, MA 01748
(508) 293-6654

Counsel for EMC Corporation

SUZANNE MICHEL
GOOGLE INC.
25 Massachusetts Avenue, N.W.
Suite 900
Washington, D.C. 20001
(202) 677-5398

Counsel for Google Inc.

MATTHEW SARBORARIA
ORACLE CORPORATION
500 Oracle Parkway
Redwood City, CA 94065
(650) 506-5200

Counsel for Oracle Corporation

February 26, 2015

AMICUS CURIAE BRIEF

No. 13-896

Supreme Court, U.S.
FILED
FEB 26 2015
OFFICE OF THE CLERK

IN THE

Supreme Court of the United States

COMMIL USA, LLC,

Petitioner,

v.

CISCO SYSTEMS, INC.,

Respondent.

ON WRIT OF CERTIORARI TO THE UNITED STATES COURT OF APPEALS FOR THE FEDERAL CIRCUIT

BRIEF OF *AMICUS CURIAE* GENERIC PHARMACEUTICAL ASSOCIATION IN SUPPORT OF RESPONDENT

WILLIAM A. RAKOCZY
Counsel of Record
DEANNE M. MAZZOCHI
PETER J. CURTIN
JEFFREY A. MARX
RAKOCZY MOLINO MAZZOCHI
& SIWIK LLP
Six West Hubbard Street, Suite 500
Chicago, IL 60654
(312) 527-2157
wrakoczy@rmmslegal.com

Counsel for Amicus Curiae
Generic Pharmaceutical Association

COUNSEL PRESS
(800) 274-3321 • (800) 359-6859

TABLE OF CONTENTS

Page

TABLE OF CONTENTS. i

TABLE OF CITED AUTHORITIES iii

INTEREST OF THE *AMICUS CURIAE* 1

SUMMARY OF ARGUMENT 2

ARGUMENT 9

I. Specific Culpable Intent To Induce Infringement is Required For Liability Under 35 U.S.C. § 271(b) 9

A. *Global-Tech* Held That § 271(b) Liability Requires Knowledge That The Induced Acts Are Infringing Acts. 9

B. Nothing in *Aro II* Calls *Global-Tech* Into Doubt: Indirect Infringement Requires Specific Culpable Intent. 12

C. Induced Infringement Originated in the Common Law of "Aiding and Abetting"— A Specific Intent Offense. . . 14

D. The Federal Circuit Has Required Proof of Specific Intent to Induce Infringement for Twenty-Five Years With No Harm to the Patent System. 16

Table of Contents

Page

E. A Good-Faith Belief Of Invalidity Is Relevant Evidence Of Lack Of Specific Intent.....18

II. Adopting A Knowledge-Of-The-Patent Standard For § 271(b) Liability Would Fundamentally Alter Hatch-Waxman Litigation and Promote Brand Abuse.....20

A. Federal Law and Regulations Require ANDA Filers to Know of the Patents and Their "Relevance" Before Suit.....20

B. Commil's Proposed Standard Opens the Door to Additional Brand Abuse of the Regulatory System to Delay Generic Entry.....23

C. The Alternative Approaches Proposed by the Government and the Brand Amici Do Not Create A Better or More Workable Standard.....27

CONCLUSION 33

TABLE OF CITED AUTHORITIES

Page

FEDERAL CASES

Aro Mfg. Co. v. Convertible Top Replacement Co., 377 U.S. 476 (1964) ..... *passim*

AstraZeneca Pharms. LP v. Apotex Corp., 669 F.3d 1370 (Fed. Cir. 2012) 6, 23, 28, 29

Blessing v. Freestone, 520 U.S. 329 (1997) 9, 18

Broadcom Corp. v. Qualcomm Inc., 543 F.3d 683 (Fed. Cir. 2009) 18

Burnet v. Coronado Oil & Gas Co., 285 U.S. 393 (1932) 27

Caraco Pharm. Labs., Ltd. v. Novo Nordisk A/S, 132 S.Ct. 1670 (2012) ..... *passim*

Commil USA LLC, v. Cisco Sys., Inc., 720 F.3d 1361 (Fed. Cir. 2013) 8, 19

Commil USA, LLC, v. Cisco Sys., Inc., 135 S.Ct. 752 (2014) 8-9

DSU Med. Corp., v. JMS Co., Ltd., 471 F.3d 1293 (Fed. Cir. 2006) 6-7, 16, 18, 32

Fresenius USA, Inc. v. Baxter Int'l, Inc., 721 F.3d 1330 (Fed. Cir. 2013) 19

Cited Authorities

Page

Global-Tech Appliances, Inc. et al v. SEB S.A.,
131 S.Ct. 2060 (2011) ..... *passim*

Hubbard v. United States,
514 U.S. 695 (1995) 26

In re Bill of Lading Transmission & Processing Sys. Patent Litig.,
681 F.3d 1323 (Fed Cir. 2012) 10

Manville Sales Corp. v. Paramount Sys., Inc.,
917 F.2d 544 (Fed. Cir. 1990) 7, 16

Merial Ltd. v. Cipla Ltd.,
681 F.3d 1283 (Fed. Cir. 2012) 10

Metro-Goldwyn-Mayer Studios Inc., v. Grokster, Ltd.,
545 U.S. 913 (2005) 13

Microsoft Corp. v. DataTern, Inc.,
755 F.3d 899 (Fed. Cir. 2014) 10

Mylan Pharms., Inc. v. Thompson,
268 F.3d 1323 (Fed. Cir. 2001) 24

Prima Tek II, LLC v. Polpap, S.A.R.L,
412 F.3d 1284 (Fed. Cir. 2005) 20

Richdel, Inc., v. Sunspool Corp.,
714 F.2d 1573 (Fed. Cir. 1983) 20

Cited Authorities

Page

Rosemond v. United States,
134 S.Ct. 1240 (2014) 15

Sandoz, Inc. v. Amgen Inc., et al.,
773 F.3d 1274 (Fed. Cir. 2014) 25

Smith & Nephew, Inc. v. Arthrex, Inc.,
502 Fed. App'x 945 (Fed. Cir. 2013) 10

SynQor, Inc. v. Artesyn Tech., Inc.,
709 F.3d 1365 (Fed. Cir. 2013) 10

United States v. United Foods, Inc.,
533 U.S. 405 (2001) 9, 18

Warner-Lambert Co. v. Apotex Corp.,
316 F.3d 1348 (Fed. Cir. 2003) ..... *passim*

Water Techs. Corp. v. Calco, Ltd.,
850 F.2d 660 (Fed. Cir. 1988) 16

FEDERAL STATUTES

21 U.S.C. § 355 20

21 U.S.C. § 355(b)(2)(j)(2)(B) 21

21 U.S.C. § 355(c)(3)(C) 5, 21

21 U.S.C. § 355(j)(2)(A)(i) 21

21 U.S.C. § 355(j)(2)(A)(ii) 21

Page

21 U.S.C. § 355(j)(2)(A)(iv) 21

21 U.S.C. § 355(j)(2)(A)(v) 21

21 U.S.C. § 355(j)(2)(A)(vii) 21

21 U.S.C. § 355(j)(2)(A)(viii) 5, 27

21 U.S.C. § 355(j)(5)(B)(iii) 32

21 U.S.C. § 355(j)(5)(C)(i) 25

35 U.S.C. § 271 ..... *passim*

OTHER AUTHORITIES

Generic Pharmaceutical Association, *Generic Drug Savings in the U.S.: 6th Annual Edition* (2014), *available at* http://www.gphaonline.org/media/cms/GPhA_Savings_Report.9.10.14_FINAL.pdf. 1

Aitken, *et al.*, *Medicine Use and Shifting Costs of Healthcare: A Review of the Use of Medicines in the United States in 2013* (IMS Inst. Healthcare Informatics, 2014), *available at* http://www.imshealth.com/deployedfiles/imshealth/Global/Content/Corporate/IMS%20Health%20Institute/Reports/Secure/IIHI_US_Use_of_Meds_for_2013.pdf. 1

Cited Authorities

Page

Barry, *et al.*, *2014 Patent Litigation Study* (PricewaterhouseCoopers, 2014), *available at* http://www.pwc.com/en_US/us/forensic-services/publications/assets/2014-patent-litigation-study.pdf 5

Lemley, *Inducing Patent Infringement*, 39 U.C.D.L.Rev. 225 (2005).....14

U.S. Dep't of Health & Human Serv., APPROVED DRUG PRODUCTS WITH THERAPEUTIC EQUIVALENCE EVALUATIONS, (35th ed. 2015).....3

LEGISLATIVE HISTORY

Act July 19, 1952, ch. 950, 66 Stat. 792, *codified as* Title 35 of the United States Code, entitled "Patents." 14

Drug Price Competition and Patent Term Restoration Act of 1984, Pub. L. No. 98-417, 98 Stat. 1585 (1984) (codified at 21 U.S.C. §§ 355, 360(cc) (2006), 35 U.S.C. §§ 156, 271, 282 (2006), as amended by Title IX of the Medicare Prescription Drug, Improvement, and Modernization Act of 2003, Pub. L. No. 108-173, 117 Stat. 2066 (2003), as amended by the FDA Safety and Innovation Act, Pub. L. No. 112-144 (2012)) 21

H.R. Rep. No. 82-1923 (1952).....14

S. Rep. No. 82-1979 (1952) 14

INTEREST OF THE *AMICUS CURIAE*[1]

The Generic Pharmaceutical Association (GPhA), is a voluntary, non-profit association representing nearly 100 manufacturers and distributors of finished generic drug products and bulk active pharmaceutical ingredients, as well as suppliers of other goods and services to the generic pharmaceutical industry. GPhA's members provide American consumers generic drugs that are as safe and effective as their brand-name counterparts at a fraction of the cost.

Generic drugs play an essential role in reducing consumer healthcare costs. Generic medicines saved the United States health system nearly $1.5 trillion over the past 10 years, including $239 billion in 2013 alone.[2] GPhA members' products constituted 86% of all prescriptions dispensed in the United States in 2013, but only 29% of the money spent on prescriptions.[3]

---

1. No counsel for a party authored this brief in whole or in part, and no such counsel or party made a monetary contribution intended to fund the preparation or submission of this brief. No person other than the amicus, or its counsel, made a monetary contribution intended to fund its preparation or submission. The parties have consented to the submission of this brief and such consents are being submitted herewith.

2. *See* Generic Pharm. Ass'n, *Generic Drug Savings in the U.S.: 6th Annual Edition* 1 (2014), *available at* http://www.gphaonline.org/media/cms/GPhA_Savings_Report.9.10.14_FINAL.pdf.

3. Murray Aitken et al., *Medicine Use and Shifting Costs of Healthcare: A Review of the Use of Medicines in the United States in 2013* 40, 51 (IMS Inst. Healthcare Informatics, 2014), *available at* http://www.imshealth.com/deployedfiles/imshealth/

There is a strong relationship between healthcare costs and patients' use of healthcare services and medicines, and though the broader economy is recovering, economic forces continue to make healthcare less affordable.[4] GPhA's members are committed to providing patients and providers timely access to affordable pharmaceuticals.

GPhA has a strong interest in preserving and strengthening incentives for manufacturers to provide generic drugs based on abbreviated new drug applications (ANDAs) to the American public as quickly as possible, consistent with the legitimate patent rights of brand drug companies. GPhA's interest lies in ensuring proper application of the patent laws *and* the regulatory system created by the Hatch-Waxman Amendments to the Federal Food, Drug, and Cosmetic Act (FFDCA). GPhA regularly participates in litigation as *amicus curiae*, most recently including *POM Wonderful LLC v. The Coca-Cola Co.*, No. 12-761; *FTC v. Actavis, Inc.*, No. 12-416; *Mut. Pharm. Co. v. Bartlett*, No. 12-142; and *Caraco Pharm. Labs, Ltd. v. Novo Nordisk A/S*, No. 10-844.

SUMMARY OF ARGUMENT

The Court should reject Commil's proposed knowledge-of-the-infringement-allegation scienter standard for 35 U.S.C. § 271(b). The unwarranted expansion of indirect infringement liability Commil proposes would particularly disrupt current practice in pharmaceutical patent litigation and harm the public by encouraging

---

Global/Content/Corporate/IMS%20Health%20Institute/Reports/Secure/IIHI_US_Use_of_Meds_for_2013.pdf.

4. *Id.* at 7.

brand company patent abuse.[5] As discussed below, generic pharmaceutical companies following federal law and regulations inevitably receive notice of the listed Orange Book[6] patents before filing their ANDA, and knowledge of the patentee's infringement claims shortly thereafter. Their knowledge is required by law. Eliminating their ability to rely on a good-faith belief that the infringement allegation is wrong[7] as a defense to § 271(b) liability could render induced infringement a strict liability tort for generic manufacturers, without any culpable behavior. Watering down scienter to require mere knowledge of the infringement allegation threatens innocent parties by divorcing liability from culpable wrongdoing, and conflicts with the Hatch-Waxman Act itself.

This Court's *Global-Tech* holding was clear and correct:[8] "[I]nduced infringement under § 271(b) requires

---

5. The pharmaceutical amici lined up to support Commil have no doubt considered these implications.

6. U.S. Dep't of Health & Human Servs., APPROVED DRUG PRODUCTS WITH THERAPEUTIC EQUIVALENCE EVALUATIONS (35th ed. 2015) ("Orange Book").

7. "Wrong" here means legally or factually incorrect because the proposed product does not fall within the scope of the patent claims; because the patent claims off-label uses; because the patent is invalid; because the patent will have expired by the time of marketing; etc.

8. *Global-Tech*'s merits are not properly before the Court, but Petitioner and certain amici expressly or implicitly challenge the *Global-Tech* analysis and more generally challenge whether specific intent is an element of induced infringement—another issue not properly before the Court. *See* Pet. Br. 24; U.S. Br. 13; Gilead Br. 4. GPhA therefore addresses these issues even though the Court can decide this case without so doing.

knowledge that the induced acts constitute patent infringement." *Global-Tech Appliances, Inc. v. SEB S.A.*, 131 S. Ct. 2060, 2068 (2011). *Global-Tech* adheres to the statute and prior precedent holding that indirect infringement liability requires culpable intent. *See* 35 U.S.C. § 271; *see also, e.g., Aro Mfg. Co. v. Convertible Top Replacement Co.*, 377 U.S. 476, 488 (1964) ("Aro II").

This appeal seeks to upend more than the ruling below, which held evidence of a good-faith belief of invalidity was relevant to show a lack of the scienter required to induce infringement. Commil and its amici challenge decades of precedent by urging the Court to replace the specific-intent-to-infringe standard with a mere knowledge-of-infringement-allegation standard. *See* Pet. Br. at 27 ("[T]he knowledge required for indirect infringement is satisfied where the defendant has knowledge of the patent's existence and its potential applicability to the conduct at issue."). Commil's new standard contradicts the language of the statute; overrules *sub silentio* years of precedent and practice[9]; and would tremendously expand indirect infringement liability.

The new standard would radically alter the dynamics of Hatch-Waxman litigation. The Hatch-Waxman Act requires ANDA filers to review the patents listed for the reference drug in the Food and Drug Administration's (FDA) Orange Book, certify to FDA regarding those patents, and then provide notice to the relevant parties regarding any challenged patents. *Caraco Pharm. Labs., Ltd. v. Novo Nordisk A/S*, 132 S. Ct. 1670, 1676-77 (2012). FDA regulations also require that proposed generic labeling be the same as the brand label, although generic

9. *See infra* Argument Sections I.A. – I.D.

companies may, under certain circumstances, carve out of their proposed label patented methods-of-use for which they are not seeking FDA approval. *See id.* at 1676-77; 21 U.S.C. § 355(j)(2)(A)(viii).

Brand pharmaceutical companies almost inevitably sue generic ANDA filers, even though their patent claims are deemed invalid or not infringed roughly 50% of the time,[10] because filing the suit automatically stays FDA approval of the generic product for thirty months. *See* 21 U.S.C. § 355(c)(3)(C). Consequently, generic manufacturers in Hatch-Waxman litigation inevitably receive notice of (a) an Orange Book patent's existence and (b) that a patentee has alleged infringement.

The proposals by Commil and its amici also render a nullity one statutory provision that Congress intended generic companies to use to *avoid* method-of-use patents. Specifically, when a brand company secures multiple FDA-approved indications or uses for a product, a generic ANDA-filer can submit a "Section (viii)" statement to exclude from its label one or more patented indications or uses, and to seek FDA approval only for a *non*-patented indication or use. *See Caraco*, 132 S. Ct. at 1676-77; 21 U.S.C. § 355(j)(2)(A)(viii). Under a mere knowledge-of-the-infringement-allegation standard, a generic could certify to FDA that it *does not want* its product approved for the patented use and carve that use out of the proposed label, but still face an injunction or alleged inducement liability if the patentee can identify a single

---

10. *See* Chris Barry et al., *2014 Patent Litigation Study* 21 (PricewaterhouseCoopers, 2014), *available at* http://www.pwc.com/en_US/us/forensic-services/publications/assets/2014-patent-litigation-study.pdf.

directly infringing patient or doctor notwithstanding the Section (viii) statement. This result squarely contradicts Congressional intent and a decade of precedent on which the pharmaceutical industry has relied.

It is also undisputed (as brand pharmaceutical amici recognize) that the typical remedy sought in Hatch-Waxman litigation is an injunction prohibiting FDA approval of the generic *product*, not merely certain end uses or labelling. *See* Gilead Br. 18; Abbvie Br. 13-18. If knowledge of the infringement allegation establishes scienter under § 271(b), brand companies could "maintain *de facto* indefinite exclusivity over a pharmaceutical compound by obtaining serial patents for approved methods of using the compound," thus preventing FDA approval of even unpatented uses of off-patent drugs. *AstraZeneca Pharm. LP v. Apotex Corp.*, 669 F.3d 1370, 1380 (Fed. Cir. 2012) (reaffirming *Warner-Lambert Co. v. Apotex Corp.*, 316 F.3d 1348 (Fed. Cir. 2003)). This result, too, runs counter to the Hatch-Waxman statutory scheme.

Hatch-Waxman (§ 271(e)(2)) is not "a sword against any competitor's ANDA seeking approval to market an off-patent drug for an approved use not covered by the patent." *AstraZeneca*, 669 F.3d at 1380. Commil's proposed change in the law could uniquely affect the generic pharmaceutical industry and fundamentally alter the complex, carefully-crafted balance of interests and risks in the Hatch-Waxman Act.

As the *en banc* Federal Circuit held unanimously: "[I]nducement requires that the alleged infringer knowingly induced infringement and possessed specific intent to encourage another's infringement." *DSU Med.*

Corp., v. *JMS Co., Ltd.*, 471 F.3d 1293, 1306 (Fed. Cir. 2006*) (en banc)* (citations omitted). This has been the rule in patent cases for at least twenty five years. *See Manville Sales Corp. v. Paramount Sys., Inc.*, 917 F.2d 544, 554 (Fed. Cir. 1990) ("The plaintiff has the burden of showing that the alleged infringer's actions induced acts and that he knew or should have known his actions would induce actual infringements."). The statutory language also supports a specific intent requirement. *See* 35 U.S.C. §§ 271(b)-(c). "Actively" inducing or "knowing[ly]" contributing to infringement require purposeful, culpable intent and actions. *See Global-Tech*, 131 S. Ct. at 2068.

In a pharmaceutical patent case, the Federal Circuit expressly held a generic company cannot be held liable for induced infringement merely because doctors or patients use its product off-label.[11] The generic industry has relied on this rule for over a decade, but the new standard Commil and its amici propose would effectively overturn that ruling. By their logic, if the generic company knows of infringing off-label use of its product, it has specific intent to induce infringement even if it did nothing to encourage those infringing uses.

The Court should decline to disturb this long line of settled precedent. Courts have long recognized that an accused inducer's reasonable, good-faith belief of non-infringement is relevant, admissible evidence of intent. *See, e.g., DSU*, 471 F.3d at 1307 (finding defendant's demonstrated belief in non-infringement supported a jury verdict of no induced infringement). This good-faith defense requires discovery on specific intent, and has been explored in patent cases for many years without

11. *See Warner-Lambert*, 316 F.3d at 1364-65.

overwhelming the courts, harming patent enforcement, or any other speculative harms posited by some amici. *See, e.g.*, U.S. Br. 28-33; Gilead Br. 16-26.

A defendant's good-faith belief of invalidity is also relevant to inducement because "[i]t is axiomatic that one cannot infringe an invalid patent." *Commil USA LLC, v. Cisco Sys., Inc.*, 720 F.3d 1361, 1368 (Fed. Cir. 2013). The panel therefore held that "a good-faith belief of invalidity is evidence that may negate the specific intent to encourage another's infringement, which is required for induced infringement." *Id.* The decision below logically applies decades of Federal Circuit precedent, consistent with *Global-Tech* and *Aro II*, that specific intent is required to induce infringement.

As shown below, an unbroken line of Federal Circuit precedent stretching back decades holds that liability under § 271(b) requires specific, culpable intent to induce infringement. The courts require proof of wrongdoing before imposing inducement liability, and have considered and rejected the mere "knowledge of the patent and acts" standard proposed by Commil and the government. Industry, academia and the government have conducted business and secured, enforced, and challenged patent rights under this specific intent standard for many years. GPhA urges the Court not to eliminate the specific intent requirement and upset these well-settled expectations, particularly in this case where the issue is not properly before the Court.[12]

---

12. The merit of the specific intent requirement for § 271(b) liability is not the question on which this Court granted certiorari—Question 1 in Commil's petition. *See Commil USA,*

The Court should affirm the judgment below.

ARGUMENT

I. Specific Culpable Intent To Induce Infringement is Required For Liability Under 35 U.S.C. § 271(b).

A. *Global-Tech* Held That § 271(b) Liability Requires Knowledge That The Induced Acts Are Infringing Acts.

The recent *Global-Tech* holding is clear and correct. In *Global-Tech*, this Court evaluated "whether a party who 'actively induces infringement of a patent' under 35 U.S.C. § 271(b) must know that the induced acts constitute patent infringement." *Global-Tech*, 131 S. Ct. at 2063. Answering that precise question, the Court held "that induced infringement under § 271(b) requires ***knowledge that the induced acts constitute patent infringement***." *Id.* at 2068

LLC v. Cisco Sys., Inc., 135 S. Ct. 752 (2014) (granting the writ "limited to Question 1 of the Petition."). The Government and other Commil amici acknowledge that the broader question is not before the Court. *See* U.S. Br. 9-10 n.1 & 13; PHrMA Br. 5 n.2; BIO Br. 6 n.2. So the Court should decline to rule on the issue. *See United States v. United Foods, Inc.*, 533 U.S. 405, 416-17 (2001) ("Although in some instances we have allowed a respondent to defend a judgment of grounds other than those pressed or passed upon below...it is quite a different matter to allow a petitioner to assert new substantive arguments attacking, rather than defending, the judgment when those arguments were not pressed in the court whose opinion we are reviewing, or at least passed upon by it."); *Blessing v. Freestone*, 520 US 329, 340 n. 3 (1997) (The Court "decline[d] to address [] questions which were neither raised nor decided below, and were not presented in the petition for certiorari. This Court's Rule 14.1(a).")

(emphasis added). The Federal Circuit has consistently cited *Global-Tech* in support of its longstanding rule that § 271(b) liability requires specific, culpable intent—knowledge that the induced conduct infringes the patent, rather than mere knowledge of the patent and the accused acts themselves.[13]

Finding ambiguity in the statutory language and the common law, the *Global-Tech* court turned to the *Aro II* case, which analyzed the scienter required for contributory infringement some fifty years ago. *Global-Tech*, 131 S. Ct. at 2067. The *Aro II* court held "§ 271(c) does require a showing that the alleged contributory infringer knew that the combination for which his component was especially designed ***was both patented and infringing***." *Aro II*, 377 U.S. at 488 (emphasis added). This holding has since become a bedrock principle of contributory infringement. *See Global-Tech*, 131 S. Ct. at 2068. After analyzing the *Aro II* decision and the origins of §§ 271(b) and (c) in common law contributory infringement, *Global-Tech* concludes "this same knowledge" is required "for liability under § 271(b)." *Id.* at 2067.

---

13. *See, e.g., Microsoft Corp. v. DataTern, Inc.*, 755 F.3d 899, 904 (Fed. Cir. 2014) (induced infringement requires "knowledge that the induced acts constitute patent infringement."); *Smith & Nephew, Inc. v. Arthrex, Inc.*, 502 F. App'x 945, 949-950 (Fed. Cir. 2013) (same); *SynQor, Inc. v. Artesyn Techs., Inc.*, 709 F.3d 1365, 1379 (Fed. Cir. 2013) (same); *In re Bill of Lading Transmission & Processing Sys. Patent Litig.*, 681 F.3d 1323, 1339 (Fed. Cir. 2012) (accused inducer must know "that the customer's acts constituted infringement."); *Merial Ltd. v. Cipla Ltd.*, 681 F.3d 1283, 1304 (Fed. Cir. 2012) (accused inducer "must have knowingly and intentionally induced another party's direct infringement.")

While *Global-Tech's* holding is clear, Commil and the government argue essentially that the Court did not mean what it held. The government asserts that *Global-Tech* did not "clearly resolve" whether § 271(b) requires actual knowledge of infringement versus knowledge of acts alleged to infringe. U.S. Br. 12. *See also* Pet. Br. 16-18. GPhA agrees with Cisco's analysis of the weakness and ultimate failure of this reading of *Global-Tech*. *See* Resp. Br. 13-20.

For example, the *Global-Tech* decision disapproved of "kn[own] or should have known" jury instruction language for induced infringement—holding that actual knowledge or willful blindness was the proper standard. *See Global-Tech*, 131 S. Ct. at 2068-71. The Court nonetheless affirmed the judgment because the evidence was sufficient to support a finding that "Pentalpha ***willfully blinded itself to the infringing nature of the sales*** it encouraged Sunbeam to make." *Id.* at 2071 (emphasis added). This statement—the basis for affirmance—focused on Pentalpha's subjective state of mind after the Court had strengthened the intent language to be used in jury instructions.

Moving beyond that specific language, it seems difficult to believe (as Commil and the government would have it) the Court strengthened the intent language in jury instructions while silently: (a) applying that language only to knowledge of the patent and (b) overturning decades of precedent by eliminating the specific intent requirement.

B. Nothing in *Aro II* Calls *Global-Tech* Into Doubt: Indirect Infringement Requires Specific Culpable Intent.

Aro II involved allegations of contributory infringement under 35 U.S.C. § 271(c) (1952). The Court recognized the statute presented a question not addressed by the parties or the lower courts: "the element of knowledge that must be brought home to Aro before liability can be imposed." *Aro II*, 377 U.S. at 488. In short, does the law require that Aro merely know its replacement fabrics were especially designed for use in the Ford convertible tops, or must Aro *also* know that those Ford convertible tops were patented and unlicensed such that replacing them was infringement? *Id.* The Court answered this question by holding that § 271(c) requires that the alleged contributory infringer "knew that the combination for which his component was especially designed ***was both patented and infringing***." *Id.* (emphasis added).

Despite the words "both patented and infringing," Commil and the government assert that *Aro II* supports their position that mere knowledge of the patent and the infringement allegations suffices for liability, with knowledge of infringement irrelevant. Pet. Br. 19-20; U.S. Br. 10-11. Closely examining the facts shows otherwise. In *Aro II*, notice that the patent existed and Ford lacked a license was the functional equivalent of knowledge of infringement.

First, *Aro II* presented "the almost unique case in which the component [is] hardly suitable for any noninfringing use."[14] *Aro II*, 377 U.S. at 487-88. The

14. The patent in *Aro II*—U.S. Patent No. 2,569,724—is a mechanical combination patent (a patent on a combination of

undisputed evidence showed the accused products (fabric convertible tops) were especially designed for the Ford convertibles and wouldn't fit any other cars. *Id.* at 488, n.7. Second, there was apparently no dispute that Aro's products satisfied one element of the combination patent claims (the "flexible top material" or "collapsing top" limitation) or that the combination was infringing. Thus, there was never any question in *Aro II* of belief the accused products fell outside the scope of the patent.

Aro had argued instead that the use of its products was permissible "repair" rather than infringing "reconstruction."[15] *See id.* at 479. The Court ruled that the repair/reconstruction distinction applies only to licensed products, and repairing an infringing combination is also infringement. *See id.* at 483-85. The court then turned to damages, and after considering the scienter standard ruled that damages liability began to accrue when Aro received the notice letter. *Id.* at 488-91. In this case, given the particular facts and the patent-in-suit, Aro's receipt of the notice letter also demonstrated Aro's knowledge of the infringement.

Nothing in *Aro II* detracts from *Global-Tech*'s holding that § 271(b) liability requires proof of specific intent in

---

unpatented elements) covering a "convertible automobile top." *See Aro II*, 377 U.S. at 515 (Black, J., dissenting).

15. Aro apparently did not rely on the premise that it had a good-faith basis to believe that repair of an infringing article was not itself actionable as contributory infringement. *See also Metro-Goldwyn-Mayer Studios Inc., v. Grokster, Ltd.*, 545 U.S. 913, 934-40 (2005) (finding that defendants knowingly and intentionally facilitated the copying of works subject to valid and enforceable copyrights).

the form of knowledge that the induced acts constitute patent infringement.

C. Induced Infringement Originated in the Common Law of "Aiding and Abetting"—A Specific Intent Offense.

Before Congress codified 35 U.S.C. § 271(b) in the U.S. Patent Act of 1952,[16] induced infringement was not a separate theory of liability, but was treated as evidence of contributory infringement. *See Global-Tech*, 131 S. Ct. at 2067 (citing Lemley, *Inducing Patent Infringement*, 39 U.C.D.L.Rev. 225, 227 (2005)); *see also* Gilead Br. 5. The courts imposed liability for indirect infringement because it constituted "the aiding and abetting of direct infringement by another party." *Id.* Congress acknowledged the origin of these torts when enacting §§ 271(b) and 271(c).[17] The origin of induced infringement as an "aiding and abetting" offense supports requiring specific and culpable intent—intent to cause actual infringement—as a prerequisite for liability.

This Court recently explained that aiding and abetting offenses require a showing of specific intent: "an aiding and abetting conviction requires ***not just an act facilitating one or another element, but also a state***

---

16. Act July 19, 1952, ch. 950, 66 Stat. 792, *codified as* Title 35 of the United States Code, entitled "Patents."

17. *See* H.R. Rep. No. 82-1923, at 9 (1952) (stating § 271(b) "recites in broad terms that one who aids and abets an infringement is likewise an infringer," while § 271(c) was specifically addressed to "the usual situation in which contributory infringement arises."); S. Rep. No. 82-1979, at 8 (1952) (same).

of mind extending to the entire crime." *Rosemond v. United States*, 134 S.Ct. 1240, 1248 (2014) (emphasis added) (holding that a conviction for aiding and abetting a § 924(c) violation requires intent that the predicate crime be conducted using a firearm). The Court clarified that the aiding and abetting analysis requires inquiry into the specific intent of the accused on each element of the charged offense. *See id.* at 1248-1250. "[T]he intent must go to the specific and entire crime charged—so here to the full scope (predicate crime plus gun use) of § 924(c)." *Id.* at 1248.

Applying these principles to patent infringement, to be liable for inducing infringement, *i.e.*, "aiding and abetting" direct infringement by a third-party, the defendant must have a "state of mind extending to the entire [tort]." The defendant must not merely know of the patent and the induced acts, but must also know that those acts will directly infringe the patent. Commil and the government's standard eliminates this final element—the culpable intent requirement. By so doing, such a standard removes the policy justification for aiding and abetting liability—culpable intent. Without direct infringement, there is no tort; without specific intent to aid direct infringement, there is no culpability justifying indirect liability.

For this additional reason, the Court should reject the "knowledge-of-the-infringement-allegation" standard proposed by Commil and amici and uphold a specific intent requirement for induced infringement liability.

D. The Federal Circuit Has Required Proof of Specific Intent to Induce Infringement for Twenty-Five Years With No Harm to the Patent System.

The Federal Circuit has required specific intent to induce infringement—including knowledge of actual direct infringement—as a prerequisite for § 271(b) liability for at least twenty-five years. For example, that court long ago held that § 271(b) requires proof that once defendants knew of the patent, they "actively and ***knowingly*** aid[ed] and abett[ed] another's direct infringement." *Water Techs. Corp. v. Calco, Ltd.*, 850 F.2d 660, 668 (Fed. Cir. 1988) (emphasis in original).

Sitting *en banc*, the Federal Circuit unanimously held in 2006 that § 271(b) requires proof "that the alleged infringer knowingly induced infringement and possessed specific intent to encourage another's infringement."[18] *DSU*, 471 F.3d at 1306 (citations omitted). The court articulated its holding, in part, by quoting a panel decision from 1990: "The plaintiff has the burden of showing that the alleged infringer's actions induced infringing acts and that he knew or should have known his actions would induce actual infringement." *See id.* at 1304 (quoting *Manville*, 917 F.2d at 554).

The Federal Circuit decision in *Warner-Lambert* addressed the intent required to induce infringement

---

18. This standard was so noncontroversial that two judges disagreed with the decision to grant *en banc* review because "there is no actual conflict" among panel decisions. *See DSU*, 471 F.3d at 1311 (Michel, C.J., concurring).

of method-of-use patents such as those the Abbvie and Gilead amici discuss. *See Warner-Lambert*, 316 F.3d 1348. The generic pharmaceutical industry has relied on this key decision for more than a decade. In *Warner-Lambert*, the patentee argued Apotex should be liable for induced infringement because Apotex (a) knew of the patent; and (b) knew that a certain percentage of patients would use the Apotex product in a manner that would infringe the patented method-of-use. *See id.* at 1363-65. The court disagreed because "knowledge of the acts alleged to constitute infringement" is not enough for inducement liability. *Id.* at 1363 (citation omitted). "[M]ere knowledge of possible infringement by others does not amount to inducement; ***specific intent and action to induce infringement*** must be proven." *Id.* at 1364 (citation omitted) (emphasis added). The Federal Circuit concluded that notwithstanding Apotex's knowledge infringing patients existed, Apotex lacked the specific intent to infringe since the accused uses were off-label and Apotex took no affirmative steps to encourage patients to use its product for an infringing purpose. *See id.* at 1364-65.

In sum, courts have long required proof of wrongdoing, including culpable specific intent, before imposing inducement liability. All parties to our patent system have operated according to these rules, and the courts have considered and rejected the mere knowledge-of-the-infringement-allegation standard that Commil and the government propose. Commil's appeal provides no good reason or sufficient legal basis to upend this long, unbroken and consistent line of Federal Circuit precedent requiring specific intent for § 271(b) liability. In fact, the Court should not rule on this issue at all, because it is not

properly before the Court. *See* Resp. Br. 2-3. *See also supra* note 12 (discussing *United Foods*, 533 U.S. at 416-417; *Blessing*, 520 U.S. at 240 n.3).

Therefore, the Court should reject the mere knowledge-of-the-infringement-allegation standard Commil proposes and affirm the judgment below.

E. A Good-Faith Belief Of Invalidity Is Relevant Evidence Of Lack Of Specific Intent.

Courts have long considered evidence of a defendant's reasonable, good-faith belief of non-infringement relevant to the existence of specific intent to induce infringement. *See, e.g., DSU,* 471 F.3d at 1307 (finding defendant's demonstrated belief in non-infringement supported a jury verdict of no induced infringement). This state of mind may (often must) be proved by circumstantial evidence, and is evaluated under the totality of the circumstances. *See, e.g., Broadcom Corp. v. Qualcomm Inc.*, 543 F.3d 683, 699 (Fed. Cir. 2008) (citations omitted). The presence and quality of an opinion of counsel, and evidence of good-faith reliance thereon, is relevant evidence of intent. *See id.*

This good-faith belief of non-infringement defense naturally requires discovery into the defendant's state of mind, but it has been available in patent cases for many years without overwhelming the courts, harming patent enforcement, or causing any of the other speculative harms certain amici posit. *See, e.g.*, U.S. Br. 28-33; Gilead Br. 16-26. As a practical matter, instead of creating an unmanageable "trial-within-a-trial," the evidence relevant to a good-faith belief of non-infringement overlaps significantly with the evidence regarding infringement and willfulness before the court already. The evidence

relevant to a good-faith belief of invalidity similarly overlaps with the evidence regarding invalidity and willfulness.

Given that induced infringement requires scienter reaching a threshold culpability level of wrongdoing, the decision below correctly recognized that a defendant's good-faith belief of invalidity is also relevant to the intent to induce infringement. "It is axiomatic that one cannot infringe an invalid patent." *Commil*, 720 F.3d at 1368. Because infringement necessarily presupposes a valid patent claim, "a good-faith belief of invalidity is evidence that may negate the specific intent to encourage another's infringement, which is required for induced infringement." *Id.* at 1369. This holding is a logical application of decades of Federal Circuit precedent—consistent with *Global-Tech* and *Aro II*—requiring proof of specific intent to induce the infringement, because culpable wrongdoing requires a desire to induce *infringement*.

Commil argues that subjective belief regarding invalidity is irrelevant to induced infringement because infringement and validity are separate legal issues and separate defenses. Pet. Br. 44-53. Those arguments miss the point. Commil urges the Court to eliminate any inquiry into the accused inducer's intent, and fails to acknowledge the potential effect of a good-faith belief of invalidity on the accused inducer's state of mind regarding infringement. In layman's terms, if the patent is invalid, there is nothing to infringe, and thus no intent to infringe.

An invalid patent claim is void; it is considered to have been a nullity from its beginning. *See Fresenius USA, Inc. v. Baxter Int'l, Inc.*, 721 F.3d 1330, 1346 (Fed. Cir. 2013) (patent claims cancelled for obviousness were void

ab initio). If the claim is invalid there is no property right to infringe and never was. *See, e.g. Prima Tek II, LLC v. Polypap, S.A.R.L.*, 412 F.3d 1284, 1291 (Fed. Cir. 2005) ("[T]here can be no . . . induced infringement of invalid patent claims."); *Richdel, Inc., v. Sunspool Corp.*, 714 F.2d 1573, 1580 (Fed. Cir. 1983) ("The claim being invalid there is nothing to be infringed."). *See also* Resp. Br. 43. Moreover, Justice Black's *Aro II* opinion (for four justices) also suggests that one can't infringe an invalid patent claim. When discussing the culpability of various parties, Justice Black notes that "[t]he original infringement, ***if there was an infringement here***, was Ford's." *See Aro II*, 377 U.S. at 523 (emphasis added). The accompanying footnote refers the reader to the Justice's prior discussion of the '724 patent's "doubtful validity." *Id.* at 523 n.6.

In sum, a good-faith belief of invalidity is relevant evidence of an accused inducer's state of mind because it shows a lack of intent to induce wrongful infringement of valid property rights. The Court should affirm the judgment below.

II. Adopting A Knowledge-Of-The-Patent Standard For § 271(b) Liability Would Fundamentally Alter Hatch-Waxman Litigation and Promote Brand Abuse.

A. Federal Law and Regulations Require ANDA Filers to Know of the Patents and Their "Relevance" Before Suit.

The Federal Food, Drug & Cosmetic Act ("FFDCA") governs the drug approval process. *See* 21 U.S.C. § 355. Amendments to the FFDCA commonly known as the

"Hatch-Waxman Act"[19] implemented a procedure for the filing and review of ANDAs seeking FDA approval to sell generic drugs. An ANDA applicant typically shows a generic product has the same active ingredient as—and is bioequivalent to—the brand-name product. 21 U.S.C. § 355(j)(2)(A)(ii), (iv). As this Court has stated, this process is designed to speed the introduction of lower-priced generic drugs to market. *See Caraco*, 132 S.Ct. at 1676. The Hatch-Waxman remedy bars FDA from approving the ANDA if the generic drug product is found to infringe a valid Orange Book-listed patent.

The statute requires generic ANDA filers to review and certify to the Orange Book-listed patents related to the reference brand drug. 21 U.S.C. § 355(j)(2)(A)(vii). The generic company must then provide notice to the patent-holders and relevant brand companies about any patents challenged as part of the ANDA. 21 U.S.C. § 355(b)(2)(j)(2)(B). After receiving this notice, the brand company has forty-five days to begin litigation and thus automatically stay ANDA approval for thirty months. 21 U.S.C. § 355(c)(3)(C). Moreover, FDA regulations require that proposed generic labeling (including the instructions for use) be the same as the brand label, with certain exceptions. *See* 21 U.S.C. §§ 355(j)(2)(A)(i) & (v). Consequently, generic manufacturers always have prior knowledge of Orange Book-listed patent(s) and that infringement allegations

19. Drug Price Competition and Patent Term Restoration Act of 1984, Pub. L. No. 98-417, 98 Stat. 1585 (1984) (codified at 21 U.S.C. §§ 355, 360(cc) (2006), 35 U.S.C. §§ 156, 271, 282 (2006), as amended by Title IX of the Medicare Prescription Drug, Improvement, and Modernization Act of 2003, Pub. L. No. 108-173, 117 Stat. 2066 (2003), as amended by the FDA Safety and Innovation Act, Pub. L. No. 112-144 (2012)).

exist Hatch-Waxman cases. Congress mandates that knowledge.

Because Congress and FDA require ANDA filers to review patents and provide the patentee with notice of a challenge before litigation, replacing the specific intent requirement with a mere knowledge-of-the-patent standard puts them at risk of being considered automatically or strictly liable for indirect infringement every time a court finds direct infringement.[20] This result would be unjust and turn Hatch-Waxman on its head, and there is no evidence or indication—none—that Congress intended such a drastic change in the law. Simply put, it is not the law, and should not become the law.

The standard Commil and its amici propose also renders another key provision of the Hatch-Waxman Act a practical nullity. As noted above, when there are multiple FDA-approved indications or uses for a product, a generic ANDA filer can submit a "Section (viii)" statement to exclude from its label instructions about one or more patented indications or uses so that the ANDA does not seek FDA approval for that patented indication or use. *See Caraco*, 132 S. Ct. at 1676-77; 21 U.S.C. § 355(j)(2)(A)(viii). Congress plainly intended that generics would not be held liable for induced infringement of such "carved-out" patented methods-of-use. However, under the knowledge-of-infringement standard, even after the generic certifies to FDA that it *does not want* its product approved for the patented use and carves that use out of the proposed label, it may still face an injunction or alleged inducement liability if the patentee demonstrates the generic knows

20. At least one Commil amici expressly urges this result. *See* Gilead Br. 16-17.

infringing off-label uses of the generic product exist. This is precisely the scenario described and rejected by the Federal Circuit in the *Astrazeneca* and *Warner-Lambert* cases, wherein brand companies tried to use patents to unapproved or off-generic-label uses to block generic competition. *See AstraZeneca*, 669 F.3d at 1380; *Warner-Lambert Co.*, 316 F.3d at 1359. Hatch-Waxman is intended to promote and expedite legitimate competition from generic products, not provide a "sword" to restrict competition on unpatented products or methods. But that is exactly what Commil and its amici seek to do, contrary to Congressional intent and a decade of precedent.

For all of these reasons, the mere knowledge standard (of the patents and/or that direct infringers exist) would uniquely impact the generic pharmaceutical industry, and fundamentally alter the complex, carefully-crafted balance of interests and risks reflected in the Hatch-Waxman Act. There is no reason to believe Congress intended (without ever saying it) to so disadvantage generic drug companies in litigation within a statutory scheme designed with the purpose and effect of accelerating the marketing of generic drugs. The potential consequences in Hatch-Waxman litigation of such a radical change to inducement law decidedly counsels against overturning established precedent.

B. Commil's Proposed Standard Opens the Door to Additional Brand Abuse of the Regulatory System to Delay Generic Entry.

The potentially enhanced liability risk to generic manufacturers from a mere knowledge-of-the-infringement-allegation standard for § 271(b) liability would also increase the opportunity for abuse of the

regulatory approval process by brand drug companies to delay generic entry. *See, e.g., Caraco*, 132 S.Ct. at 1675 (permitting generic drug manufacturers' counterclaims to force correction of inaccurate Orange Book patent listings).

Regarding knowledge of the patent itself, as the Court has previously noted, the brand company owning the New Drug Application ("NDA") for a branded product controls the relevant contents of the Orange Book—patent listings and use codes. *See id.* at 1676. The NDA-holder can list new patents in the Orange Book, even if irrelevant to the approved drug product; FDA will not police the accuracy of the listings. *See Mylan Pharms., Inc. v. Thompson*, 268 F.3d 1323, 1327 (Fed. Cir. 2001). As for knowledge of infringement allegations, an NDA-holder initially defines use codes for listed method-of-use patents, and may even force a label change to try to ensnare generic products under those use codes. *Caraco,* 132 S.Ct. at 1679-80. This can even occur during litigation, as in *Caraco. Id.* FDA will require the generic manufacturer to review and certify to the newly-listed patent and/or changed use code; and change its proposed label to conform to the new brand label.

Faced with brand maneuvering under current law, a generic defendant can raise a defense on the basis of its intent and good-faith belief in non-infringement or invalidity and even sue to correct the Orange Book listings. However, if mere knowledge (or knowledge of the patentee's infringement theory) suffices to create §271(b) liability, a *brand company's acts alone* could create the generic's inducement liability, regardless of the generic's original intent, desire or lack of culpability when filing the

ANDA or during litigation. The absurdity of this proposed inducement standard is manifest, and any standard under which brand patentees can impose liability on their generic competitor through the *patentee's* own acts or accusations is ripe for considerable abuse—which is reason enough to reject it.

Further, a legal regime where mere knowledge of the patent and the patentee's infringement allegation suffices for § 271(b) liability creates a perverse incentive for brand companies to make weak or bad-faith infringement allegations against the generic industry at large. (*See* Resp. Br. 31-36 (discussing the problems posed for the technology industry by indiscriminate notice letters from patent licensing entities)). Having received such an allegation, the generic company is compelled to expose itself to a potentially enhanced risk of liability in Hatch-Waxman litigation.

Commil's amici suggest generics with a good-faith belief in patent invalidity can protect against inducement liability by preemptively filing a declaratory judgment action seeking to have a patent declared invalid. *See* U.S. Br. 17. To the contrary, Hatch-Waxman prohibits courts from exercising jurisdiction over such challenges brought by generic companies until 45 days ***after*** the generic files its ANDA with a Paragraph IV certification and provides notice to the patentee—the very act creating generic liability in the first instance. *See* 21 U.S.C. § 355(j)(5)(C)(i); *compare Sandoz Inc., v. Amgen, Inc.*, 773 F.3d 1274, 1275 (Fed. Cir. 2014) (declining to accept jurisdiction notwithstanding Sandoz's concerns about incurring liability for proposed biosimilar product).

These potential abuses are just some examples of the pernicious effects that could result in the Hatch-Waxman context from the change in the law urged by Commil and its amici. The Court should not undertake such a change lightly, and particularly should not do so here where, as noted above, the question of the specific intent standard for indirect infringement is not properly before the Court. *See supra*, note 12.

This Court has often emphasized the importance of stability in the law—as exemplified by the doctrine of *stare decisis*—particularly in cases (like this) involving statutory interpretation. As the Court stated in *Hubbard v. United States*, recalling the words of Justice Cardozo:

> It is, of course, wise judicial policy to adhere to rules announced in earlier cases. As Justice Cardozo reminded us: 'The labor of judges would be increased almost to the breaking point if every past decision could be reopened in every case, and one could not lay one's own course of bricks on the secure foundation of the courses laid by others who had gone before him.' Adherence to precedent also serves an indispensable institutional role within the Federal Judiciary. . . . Respect for precedent is strongest 'in the area of statutory construction, where Congress is free to change this Court's interpretation of its legislation.'"

Hubbard v. United States, 514 US 695, 711-12 (1995) (internal citations omitted). *See also id.* at 712 n.11 (collecting cases). Justice Brandeis succinctly enunciated these principles in a well-known dissent:

> *Stare decisis* is usually the wise policy, because in most matters it is more important that the applicable rule of law be settled than that it be settled right. This is commonly true, even where the error is a matter of serious concern, provided correction can be had by legislation.

Burnet v. Coronado Oil & Gas Co., 285 U.S. 393, 406 (1932) (Brandeis, J., dissenting).

GPhA respectfully urges this Court to follow this wise counsel and reject Commil's invitation to upend the public understanding of *Global-Tech* and *Aro II*, overturn twenty-five years of Federal Circuit precedent (including precedent on which the generic pharmaceutical industry has long relied), and render a nullity statutory provisions created by Congress some thirty years ago that have proven critical to lowering healthcare costs, just as Congress intended. *See* U.S.C. § 355(j)(2)(A)(viii).

The Court should reject Commil's proposed knowledge-of-the-infringement-allegations standard for indirect infringement.

C. The Alternative Approaches Proposed by the Government and the Brand Amici Do Not Create A Better or More Workable Standard.

Commil and its amici identify certain specific concerns about the good-faith belief of invalidity defense, and about the specific intent requirement generally. As discussed below, to the extent these putative concerns are not mere smoke-screens, their proposed solutions would not improve the patent system, and indeed run counter to

Hatch-Waxman and decades of settled precedent on which the pharmaceutical industry has relied.

Commil and the government propose that the Court allow a patentee to establish the scienter required by § 271(b) by proving the accused inducer was aware of the patent (or willfully blind) and aware of the patentee's view that the induced conduct was infringing. *See* Pet. Br. 27; U.S. Br. 17-18.

In addition to the legal and policy problems with this standard identified above, the mere knowledge rule has other negative practical consequences discussed above. If a brand company secures a method-of-use patent for a drug, under Commil and its amici's theory, the generic manufacturer incurs inducement liability the moment it receives a copy of the patent and the brand's infringement theory, even if the generic deliberately excludes that patented use from the generic company's drug label. This result would abrogate the Federal Circuit's long-standing *Warner-Lambert* rule, upon which the generic drug industry heavily relies. *See Warner-Lambert*, 316 F.3d at 1364 ("[M]ere knowledge of possible infringement by others [for a patent claiming an off-label method of using the drug] does not amount to inducement; ***specific intent and action to induce*** infringement must be proven.") (emphasis added).

Indeed, the Federal Circuit's more recent *AstraZeneca* decision reconfirmed that a generic manufacturer cannot incur inducement liability for FDA-approved uses of a drug so long as the generic's label excludes the patented use, and that to hold otherwise would undermine the Hatch-Waxman statutory scheme. *AstraZeneca*, 669 F.3d at 1379-80.

These cases have provided clear guidance to the generic pharmaceutical industry for the past decade, consistent with decades of precedent, that specific, culpable intent and acts are required for induced infringement liability. Merely making and selling a product is not enough, even if the brand company informs a generic that some patients may at some point directly infringe.

The mere knowledge standard proposed by Commil and the government thus would transform the landscape and create a regime where—as the Federal Circuit has previously noted—the brands could use § 271(b) to "maintain *de facto* indefinite exclusivity over a pharmaceutical compound by obtaining serial patents for approved methods of using the compound" and thus prevent FDA approval of even unpatented uses of off-patent drugs. *See AstraZeneca*, 669 F.3d at 1380; *Warner-Lambert*, 316 F.3d at 1359. The Hatch-Waxman Act is not intended to serve as a sword and shield to stave off generic competition, much less competition on unpatented products or unpatented uses. *See Warner-Lambert*, 316 F.3d at 1359.

Gilead presents a similar argument slightly differently. According to Gilead, a defendant's beliefs in non-infringement or invalidity reflect a mere "mistake of law," which can never be a defense to inducement. *See* Gilead Br. 23-25. Per Gilead, § 271(b) requires only "that the defendant take an affirmative step to persuade another to do something, and to intend to bring about that result." *Id.* at 4. Gilead also expressly urges the Court to adopt the scienter for indirect infringement rejected by this Court in *Aro II* and *Global-Tech*, and by twenty-five years of Federal Circuit precedent:

> The rule for inducing infringement under § 271(b) should thus be the same as for every other tort. The defendant should be required simply to (1) take an affirmative step to induce another to commit acts that constitute infringement, (2) intend that the other has committed those acts, and (3) know of the patent's existence (or be willfully blind to it).

Id. at 10. *See also id.* at 16 (Congress did not intend an inducer to avoid liability "with its mere say-so the patent was invalid").

Even aside from the common law origins of indirect infringement as an "aiding and abetting" tort (*see supra* Argument Section I.C.) and the weight of authority against Gilead, there are other practical problems with Gilead's proposal. Invoking very general language as it does, Gilead's proposed standard either:

- rewrites the patent statute to make an accused inducer (the generic manufacturer) arguably automatically or strictly liable whenever any direct infringement of method-of-use claims exists (by construing generic product manufacture to be an "affirmative step" to induce infringement); or

- justifies the good-faith defense, because the generic company's scienter requires proof not only of the generic's affirmative belief and desire that the company wants to, but that it has actually intentionally encouraged

> real-world patients to put the generic product to actually infringing uses (as opposed to patients using the product based on what their doctors said, or what even the brand company encouraged patients to do with the product).

Gilead also exaggerates the likely consequences of the Federal Circuit's good-faith belief of invalidity rule. To be held in "good faith," a belief of non-infringement or invalidity must be reasonable in light of the existing legal presumptions and standards. A good-faith defense is **not** just any excuse a party can dream up, no matter how implausible, as Gilead suggests. This can be seen in the courts' careful analysis and application of the good-faith belief in non-infringement defense for many years. The defense sometimes succeeds but sometimes fails; the extreme scenarios posited by Gilead do not reflect reality.

Abbvie urges a similar rule on the Court in simpler terms: "when a party instructs others to infringe a patent and where that patent is found to be valid, liability should attach." Abbvie Br. 3. In other passages, Abbvie expressly urges the same standard and policy as Gilead for the same self-interested reasons: "[T]the generic manufacturer would clearly induce infringement by marketing the product and labeling it with instructions for practicing the claimed steps." Abbvie Br. 15. In other words, Abbvie urges the Court to hold generic drug manufacturers strictly liable for indirect infringement regardless of intent because the generics are complying with federal law and labeling regulations. Abbvie also complains that the current law "could permit some generic manufacturers [those who launch at-risk] to escape inducement liability

for a period of time until their validity arguments are rejected by a court . . . ." *Id.* at 17.

Abbvie clearly wishes to overturn the current law on indirect infringement. The problem with Abbvie's argument, though, is that this "parade of horribles"—the specter of specific intent/good-faith defenses rendering brand companies unable to obtain injunctive relief and damages—does not reflect the realities of Hatch-Waxman practice. Abbvie cites no examples supporting its argument although specific intent has been the rule, and the good-faith belief of non-infringement defense has been available, for years. *See, e.g., DSU*, 471 F.3d at 1306-07.

Moreover, Abbvie's scenario arises only if **both** the case is not resolved during the automatic 30-month stay period **and** the brand is unable to secure a preliminary injunction to prevent an "at risk" launch. Brand plaintiffs routinely seek preliminary relief and to extend the 30-month stay. If the patentee cannot secure an injunction, it presumably has not shown it is likely to succeed on the merits—and hence the belief of an invalid patent is likely held in good-faith. Moreover, parties are obligated to expedite Hatch-Waxman litigation so it concludes within that thirty month period. 21 U.S.C. § 355(j)(5)(B)(iii). The potential at-risk launch result Abbvie complains of is contemplated under the statute and perfectly aligned with the Congressional balance of interests. A patentee like Abbvie is fully in control of its own destiny to expedite the validity challenge to its patents, and Hatch-Waxman rightly encourages this to facilitate getting generic drugs to market fast.

CONCLUSION

First, the Court should reject Commil's invitation to overturn the specific intent scienter standard for § 271(b) liability: (a) that issue is not properly before the Court; (b) the specific intent requirement is consistent with the language and common law origins of the statute; (c) the specific intent requirement is set forth in this Court's precedent and should not be overruled; (d) the specific intent requirement is reflected in decades of Federal Circuit precedent not challenged below; and (e) all parties to our patent system, particularly including the generic pharmaceutical industry, have long relied upon this standard in the course of their businesses and intellectual property strategies. The effects of the sudden and radical change urged by Commil and its amici would be severe and damaging, and upset settled expectations in the pharmaceutical and other industries, where there is no evidence that Congress intended to do so.

Second, the Court should affirm the judgment below because the availability of a good-faith-belief-of-invalidity defense to § 271(b) is a logical and appropriate application of the specific intent requirement. The alternative tests Commil and its amici propose are disruptive to settled pharmaceutical industry expectations, ripe for brand abuse, and depart from the premise that inducement liability requires culpable wrongdoing by the alleged inducer.

February 26, 2015

Respectfully submitted,

WILLIAM A. RAKOCZY
Counsel of Record
DEANNE M. MAZZOCHI
PETER J. CURTIN
JEFFREY A. MARX
RAKOCZY MOLINO MAZZOCHI
& SIWIK LLP
Six West Hubbard Street, Suite 500
Chicago, IL 60654
(312) 527-2157
wrakoczy@rmmslegal.com

Counsel for Amicus Curiae
Generic Pharmaceutical Association

AMICUS CURIAE BRIEF

Supreme Court, U.S.
FILED
JAN 26 2015
OFFICE OF THE CLERK

No. 13-896

In the
Supreme Court of the United States

COMMIL USA, LLC,

Petitioner,

v.

CISCO SYSTEMS, INC.,

Respondent.

On Writ of Certiorari to the United States Court of Appeals for the Federal Circuit

BRIEF OF AMICUS CURIAE GILEAD SCIENCES, INC. IN SUPPORT OF PETITIONER

CRAIG E. COUNTRYMAN
Fish & Richardson P.C.
12390 El Camino Real
San Diego, CA 92130
(858) 678-5070

JONATHAN E. SINGER
Counsel of Record
Fish & Richardson P.C.
3200 RBC Plaza
60 South Sixth Street
Minneapolis, MN 55402
(612) 335-5070

Counsel for Amicus Curiae

TABLE OF CONTENTS

Page

INTEREST OF *AMICUS CURIAE* 1
INTRODUCTION 2
ARGUMENT 4
I. A Belief in Noninfringement or Invalidity Should Not Preclude Inducement Liability 4
A. Section 271(b) Was Derived from A Common Law Doctrine That Did Not Require Knowledge of Wrongdoing. 4
B. This Court's Precedent Does Not Require a Departure From the Common Law Rule. 10
C. The Federal Circuit's Rule Conflicts With the Tort Principles Upon Which § 271(b) Was Based. 15
II. The Federal Circuit's Departure from the Common Law Rule Creates Serious Problems for Innovators. 16
A. The Federal Circuit's Rule Conflicts With Congress's Directive That Patents Needed to Protect Investments in Drug Development Should be Enforceable. 16
B. The Federal Circuit's Rule Invites Difficult Mini-trials about State of Mind. 23
CONCLUSION 26

TABLE OF AUTHORITIES

Page(s)

Cases

Aro Mfg. Co. v. Convertible Top Replacement Co., 377 U.S. 476 (1964) (*Aro II*) 12, 14

Barlow v. United States, 32 U.S. 404 (1833) 24

Commil USA, LLC v. Cisco Systems, Inc., 720 F.3d 1361 (Fed. Cir. 2013) 10

Glaxo, Inc. v. Novopharm., Ltd., 110 F.3d 1562 (Fed. Cir. 1997) 17

Global-Tech Appliances, Inc. v. SEB SA, 131 S. Ct. 2060 (2011) ..... *passim*

Jerman v. Carlisle, McNellie, Rini, Kramer & Ulrich LPA, 130 S.Ct. 1605 (2010) 6, 25

Knorr-Bremse v. Dana Corp., 383 F.3d 1337 (*en banc*) 25

Metro-Goldwyn Mayer Studios, Inc. v. Grokster, Ltd., 545 U.S. 913 (2005) 10, 11, 12

Microsoft Corp. v. i4i Ltd. P'ship, 131 S. Ct. 2238 (2011) 15

Russello v. United States,
464 U.S. 16 (1983) 14

Sanofi-Aventis v. Apotex, Inc.,
659 F.3d 1171 (Fed. Cir. 2011) 23

In re Seagate,
497 F.3d 1360 (Fed. Cir. 2007) (*en banc*) 25

Webster v. Fall,
266 U.S. 507 (1925) 13

Statutes

21 U.S.C. § 355(j)(2)(A)(vii)(IV) 17

35 U.S.C. § 154 21

35 U.S.C. § 271 ..... *passim*

35 U.S.C. § 282 ..... 15, 18

35 U.S.C. § 284 25

35 U.S.C. § 298 25

35 U.S.C. §§ 302, 303 20

Legislative History

80th Cong., 2nd Sess., ser. 21, at 3
(1948) (statement of Giles S. Rich) 16

Contributory Infringement: Hearings on H.R. 3866 before Subcomm. No. 4 of the H. Comm. on the Judiciary, 81st Cong. 83 *(1949)* 9

H. Rep. No. 1923, 82nd Cong., 2d Sess, at 9 (1952) (1952) 5

S. Rep. No. 1979, 82nd Cong., 2d Sess. at 8 (1952) 5

Other Authorities

AIPLA, Report of the Economic Survey, *available at* http://bit.ly/1yF9L9h 26

Benjamin N. Roin, Unpatentable Drugs and the Standards of Patentability, 87 TEX. L. REV. 503, 512-13 (2009) 18

Congressional Budget Office, RESEARCH AND DEVELOPMENT IN THE PHARMACEUTICAL INDUSTRY (Oct. 2006) 18

Ex Parte Reexamination Filing Data (Sept. 30, 2013), *available at* http://1.usa.gov/1xprGfM 20, 21

FTC Report, *To Promote Innovation: The Proper Balance of Competition and Patent Law and Policy* (2003) 18

Henry J. Friendly, FEDERAL JURISDICTION: A GENERAL VIEW 24

Mark Lemley, *Inducing Patent Infringement*, 39 U.C. DAVIS L. REV. 225 (2005) 5, 9

PWC, *2014 Patent Litigation Study*, at p. 16, *available at* http://bit.ly/1xpusBU 20

Richard A. Posner, *Why There Are Too Many Patents in America America*, THE ATLANTIC (Jul. 12, 2012) 19, 21

RESTATEMENT OF TORTS § 158 (1939) 7, 15

RESTATEMENT OF TORTS § 164 (1939) 7, 15

RESTATEMENT OF TORTS § 876(a) (1939) 5,6, 7, 15

RESTATEMENT OF TORTS § 876(b) (1939) 8

RESTATEMENT OF TORTS § 877(b) (1939) 8

RESTATEMENT (SECOND) OF TORTS § 877(a) (1977) 10

Timothy R. Holbrook, *The Intent Element of Induced Infringement*, SANTA CLARA HIGH TECH. L.J. 399, 409 (2005) 19

U.S. Court of Appeals for the Federal Circuit, Median Time to Disposition in Cases Terminated After Hearing or Submission, *available at* http://1.usa.gov/17Z0jmU (median disposition time of 11.3 months in 2013) 21

William L. Prosser, HANDBOOK OF THE LAW OF TORTS 428 (1941) 6

Y. Pechersky, *To Achieve Closure of the Hatch-Waxman Act's Loopholes, Legislative Action is Unnecessary: Generic Manfuactures Are Able to Hold Their Own*, 25 Cardozo Arts & Ent. L.J. 775, 799 (2007) 22, 23

INTEREST OF *AMICUS CURIAE*

Gilead Sciences, Inc. is a biopharmaceutical company that discovers, develops, and commercializes medicines to fulfill unmet medical needs, including ground-breaking treatments for HIV/AIDS, liver diseases, caner, and serious respiratory and cardiovascular conditions. For example, Gilead created the first complete treatment regime for HIV infection available in a once-daily single pill, and the first and only hepatitis C treatment to provide a complete regiment in one tablet that can potentially cure the most common form of the disease.

Gilead relies on patents to protect its investment in developing these new treatments. Gilead has invested billions in research and development, and obtained approximately 500 U.S. patents. A significant number of those patents cover treatment methods, *e.g.*, new ways of administering a drug or combination of drugs to treat disease. Often, the only practical way of enforcing them against a competitor is by relying on induced infringement under 35 U.S.C. § 271(b). But the Federal Circuit's decision—which permits competitors to avoid inducement liability by saying they thought the patent was invalid—makes these patents more difficult to enforce, as every defendant raises at least one invalidity defense. Gilead has a strong interest in preventing this destruction of the patent incentive, as it relies on patents to fund its research, and, without patents, many of its potential products could never make it to market.

---

* No counsel for a party authored any part of this brief or made a monetary contribution to fund its preparation or submission. No one but *amicus* paid for its preparation or submission. All parties consent to the filing of this brief.

INTRODUCTION

The decision below added a new requirement for proving inducement that is inconsistent with the patent statute, centuries of common law practice, and the policies patents are designed to promote. When Congress enacted 35 U.S.C. § 271(b), it choose a statutory term—"induces"—with a clear common law connotation. Under then-prevailing tort principles, a defendant was liable for inducing another to commit a tort when it (1) persuaded another to engage in acts that were tortious, and (2) intended that those acts ensue. An inducer could not avoid liability by saying it mistakenly thought the acts were not tortious. By invoking this well-understood common law term, Congress intended that § 271(b) carry the same meaning. The Federal Circuit erred in holding otherwise.

There are two potential ways to fix the error. The Solicitor General's brief at the *certiorari* stage skillfully shows that a good faith belief in invalidity cannot be a defense to inducement. The Court could adopt that analysis and stop there. But we suggest the Court go further. The Federal Circuit's more fundamental error was in thinking that any mistake of law—whether a mistaken belief of noninfringement or invalidity—could be a defense to inducement. Neither type of mistake was a defense to inducement at common law. And allowing either to be a defense now would undermine Congress's aim of permitting innovators to enforce their patents against a single defendant that causes many multitudes to infringe. Either way, the Federal Circuit's new rule should not stand.

The Federal Circuit's rule is particularly pernicious because it conflicts with the carefully crafted

scheme Congress devised for enforcing pharmaceutical patents. Congress provided that innovators could enforce their patents against a generic company seeking approval for a drug "the use of which is claimed in a patent." *See* 35 U.S.C. § 271(e)(2). Under Federal Circuit law, innovators seeking to rely on this provision to prove infringement of a medical treatment patent must establish the requirements of § 271(b) are met. Yet every generic presents at least one noninfringement or invalidity defense. So, by creating a new, sweepingly broad defense under § 271(b), the Federal Circuit has seemingly rendered patents to new drug treatments unenforceable, making an important part of § 271(e)(2) a dead letter.

That result, if left undisturbed, would be disastrous for drug development. Innovators rely on patents to recoup the enormous investments required to bring new drugs to market. Treatment method patents are an especially important part of that calculus. They are usually written closely in time to a drug's clinical trials, when the innovator has a better sense of how the drug can be used to treat patients. They can thus be the best protection for the innovator's investment: their scope is carefully tailored to the true invention, and less of their term is lost to waiting for FDA approval. But the Federal Circuit's rule puts precisely these patents at risk, even when the patent is valid and covers the relevant conduct. Indeed, the only way to now prove infringement would be through the type of mini-trial on state of mind that the law has long disfavored. And even that is doubtful given that attorney-client privilege will block any discovery into a defendant's real beliefs about noninfringement or invalidity. None of these problems would arise from simply following the common law rule that Congress adopted.

ARGUMENT

I. A Belief in Noninfringement or Invalidity Should Not Preclude Inducement Liability.

A. Section 271(b) Was Derived from A Common Law Doctrine That Did Not Require Knowledge of Wrongdoing.

The best way to analyze the issue here is by starting from first principles. Section 271 imposes liability both for direct infringement and two forms of indirect infringement—inducement and contributory infringement. "A direct infringer's knowledge or intent is irrelevant." *Global-Tech Appliances, Inc. v. SEB SA*, 131 S. Ct. 2060, 2065 n.2 (2011). Conversely, the two forms of indirect infringement require some scienter because they cover conduct at least a step removed from direct infringement.

The statute articulates a different type of required conduct and scienter for each. Section 271(b) states that "[w]hoever actively induces infringement of a patent shall be liable as an infringer." This language requires that the defendant take an affirmative step to persuade another to do something, and to intend to bring about that result. *Global-Tech*, 131 S. Ct. at 2065. But the statutory text includes no requirement that the defendant know the conduct it is inducing is wrongful. By contrast, section 271(c) has a laxer standard for the required conduct (no encouragement is required), but it compensates by imposing a stricter *mens rea* requirement. The defendant is liable if it sells a component or material part of the invention "knowing the same to be especially made or especially adopted for use in an infringement of such patent." Congress enacted these provisions as part of the 1952 Patent Act to clarify the law of indi-

rect infringement and eliminate any conflict between it and the law of patent misuse. *See, e.g.*, H. Rep. No. 1923, 82nd Cong., 2d Sess, at 9 (1952) (explaining those sections "have as their main purpose clarification and stabilization"); S. Rep. No. 1979, 82nd Cong., 2d Sess. at 8 (1952) (same).

One notable aspect of Congress's clarification was that it established sections 271(b) and (c) as independent bases for liability. Courts had previously recognized only the general doctrine of "contributory infringement," and they mentioned inducement, if at all, only as evidence of contributory infringement. *See* Mark Lemley, *Inducing Patent Infringement*, 39 U.C. DAVIS L. REV. 225, 227 (2005). Nevertheless, one of the Act's drafters recognized that this doctrine was really just "an expression of the old common law doctrine of *joint tortfeasors*." *See* Giles S. Rich, *Infringement Under Section 271 of the Patent Act of 1952*, 35 J. PAT. OFF. SOC'Y 476, 480 (1953) (*citing* 52 AM. JUR., TORTS § 114 (1944)). So it stands to reason that, when Congress codified the doctrine, it did so in a manner consistent with common law principles. Indeed, the House and Senate Committee reports invoked common law language, explaining that § 271(b) "recites in broad terms that one who aids and abets an infringement is likewise an infringer," while § 271(c) was specifically addressed to "the usual situation in which contributory infringement arises." H. Rep. No. 1923, 82nd Cong., 2d Sess, at 9 (1952); *see also* S. Rep. No. 1979, 82nd Cong., 2d Sess. at 8 (1952) (same).

Under those existing common law principles, there were several alternative ways that one could be jointly liable for another's tortious conduct. *See* RESTATEMENT OF TORTS §§ 876-77 (1939). Tort law im-

posed a sliding scale for the required mental state based on the culpability of the defendant's conduct. The more culpable the conduct, the less serious the required mental state, and vice-versa. *Id.* In situations where the conduct was sufficiently culpable, mistake of law was no defense to liability. *See, e.g., Jerman v. Carlisle, McNellie, Rini, Kramer & Ulrich LPA*, 130 S.Ct. 1605, 1612 (2010) ("If one intentionally interferes with the interests of others, he is often subject to liability notwithstanding the invasion was made under an erroneous belief as to some legal matter that would have justified the conduct."); William L. Prosser, HANDBOOK OF THE LAW OF TORTS 428 (1941) ("Tort liability never has been inconsistent with the ignorance which is bliss, or the good intentions with which hell is said to be paved.... There are many situations in which a careful person is held liable for an entirely reasonable mistake. In all this there is nothing new."). The reason was simple: if the defendant's conduct was close enough to the tortfeasor's, there was less need to impose a heightened mental state beyond that otherwise required for the tort because there was less risk of trapping a potentially innocent party.

The language that Congress chose when enacting sections 271(b) and (c) mirrored the different requirements tort law imposed for inducement liability and contribution-type liability. For example, one who induced another to commit a tort was liable as long as he knew of or intended the resulting acts, regardless of whether he knew they were tortious:

> For harm resulting to a third person from the tortious conduct of another, a person is liable if he ... induces such conduct, *knowing of the*

> *conditions under which the act is done or intending the consequences which ensue.*

RESTATEMENT OF TORTS § 876(a) (1939). The rule made sense because the person who persuaded another to carry out the acts was equally responsible for their consequences:

> [O]ne who accomplishes a particular consequence is as responsible for it when accomplished through directions to another as when accomplished by himself. If he intends the result, *it is immaterial that the tortious means used are not those originally contemplated*, provided the defendant's order or inducement is one of the contributing factors.

RESTATEMENT OF TORTS § 876, cmt. a (1939).

A classic application of these principles was found in the law of trespass. Trespass, like direct patent infringement, is a strict liability offense. *Id.* at § 164 & cmt. a ("In order to be liable for a trespass on land ... it is only necessary that the actor shall intentionally be upon any part of the land in question. It is not necessary that ... he know his entry thereon to be an intrusion."). One who caused another to trespass was also liable as long as he intended to cause the other's behavior. *Id.* at § 158, cmt. i ("If, by any act of his, the actor intentionally causes a third person to enter land, he is as fully liable as though he himself enters.... This is an application of the general principle that one who intentionally causes another to do an act is under the same liability as though he himself does the act in question."). That made sense—if trespass was a strict liability offense, then the person who instructs another to go onto land should not be allowed to plead ignorance about

that land's ownership when the person he instructed to go on the land could not either.

By contrast, a different rule applied when an actor merely assisted—instead of induced or caused—another to commit a tort. For example, if someone provided another an item that could be used to commit a tort, he was liable only if he knew the other person was going to use it to act tortuously:

> For harm resulting to a third person from the tortious conduct of another, a person is liable if he ... (b) permits the other to act upon his premises *or with his instrumentalities, knowing or having reason to know that the other is acting or will act tortiously*....

RESTATEMENT OF TORTS § 877(b) (1939). Likewise, if someone merely "assisted" another's tortious conduct, rather than "induced" the conduct, then liability required knowledge that the defendant was assisting conduct that constituted a breach of duty:

> For harm resulting to a third person from the tortious conduct of another, a person is liable if he ... knows that the other's conduct constitutes a breach of duty and gives substantial assistance or encouragement to the other so to conduct himself....

RESTATEMENT OF TORTS § 876(b) (1939).

With this background, Congress's intent regarding the required mental states under section 271 comes into focus. Section 271(b)'s text invokes the term "induces" and thus corresponds to the common law doctrine requiring the same action, while section 271(c) corresponds to common law liability for providing tools that can be used tortiously. As a re-

sult, the two subsections of section 271 require different mental states, just like the two sets of Restatement provisions. Congress intended § 271(b) to cover anyone who affirmatively induced another to commit acts that constitute patent infringement so long as he intended the other to commit those acts and either knew or was willfully blind to the patent. There was no requirement that the inducer know or intend that the acts it was causing were infringing (*i.e.*, tortious). Indeed, Congress refused to adopt a proposal to change the language "actively induces" in § 271(b) to "willfully induces." See *Contributory Infringement: Hearings on H.R. 3866 before Subcomm. No. 4 of the H. Comm. on the Judiciary*, 81st Cong. 83 (1949). By contrast, section 271(c) explicitly required the defendant to have knowledge its component is used "in an infringement of such patent."

This difference made sense given the nature of the conduct required between sections 271(b) and (c). *Accord* Lemley, 39 U.C. DAVIS L. REV. at 242 ("The more significant the defendant's conduct, the less intent should be required for liability."). If you instruct someone else to do something for which they would be strictly liable, then it stands to reason that you should also be liable so long as you intended for them to do what they did. *Id.* at 244 (recommending that liability under § 271(b) for "causing infringement" should require only "knowledge of the acts caused"). Indeed, that has remained the common law rule, as reflected in a subsequent version of the Restatement:

> For harm resulting to a third person from the tortious conduct of another, one is subject to liability if he (a) orders or induces the conduct, *if he knows or should know of circumstances that*

> *would make the conduct tortious if it were his own....*

RESTATEMENT (SECOND) OF TORTS § 877(a) (1977). Again, the defendant is not required to know the conduct he induces is actually tortious. He simply has to know the acts it has induced and have whatever mental state would be required if he committed the tort himself, which, for a strict liability tort like patent infringement, adds no further requirement.

The rule for inducing patent infringement under § 271(b) should thus be the same as for every other tort. The defendant should be required simply to (1) take an affirmative step to induce another to commit acts that constitute infringement, (2) intend that the other has committed those acts, and (3) know of the patent's existence (or be willfully blind to it).

B. This Court's Precedent Does Not Require a Departure From the Common Law Rule.

The Federal Circuit, in finding a good faith belief in invalidity is a defense to inducement, departed from the common law rule. Nothing in the statute supports such a departure. Instead, the Federal Circuit relied upon (1) its view that a good faith belief in noninfringement is a defense to inducement—for which it cited *Global-Tech Appliances, Inc. v. SEB SA*, 131 S. Ct. 2060 (2011) and a prior Federal Circuit decision (*DSU Medical*) that misread *Metro-Goldwyn Mayer Studios, Inc. v. Grokster, Ltd.*, 545 U.S. 913 (2005)—and (2) the supposedly "axiomatic" proposition that one cannot infringe an invalid patent. *See Commil USA, LLC v. Cisco Systems, Inc.*, 720 F.3d 1361, 1367 (Fed. Cir. 2013). Both parts of this rationale were erroneous. We focus here on the

first part, however, as it is the more fundamental error. In particular, neither *Grokster* nor *Global-Tech* held that Congress intended to depart from the common law rule and permit even a good faith belief in noninfringement to be a defense to inducement liability under § 271(b).

1. *Grokster* involved allegations of copyright infringement against companies that distributed software products that customers used to share copyrighted music and other works. *See* 545 U.S. at 920-23. The Court borrowed from the inducement doctrine in patent law to create a similar rule for copyright, "holding that one who distributes a device with the object of promoting its use to infringe copyright, as shown by clear expression or other affirmative steps taken to foster infringement, is liable for the resulting acts of infringement by third parties." *Id.* at 936-37. The Court added that the inducement rule was limited to "purposeful, culpable expression and conduct":

> [M[ere knowledge of infringing potential or of actual infringing uses would not be enough here to subject a distributor to liability. Nor would ordinary acts incident to product distribution, such as offering customers technical support or product updates, support liability in themselves. The inducement rule, instead, premises liability on purposeful, culpable expression and conduct, and thus does nothing to compromise legitimate commerce or discourage innovation having a lawful promise.

Id. at 936-37. But the Court was not faced with the issue here—*i.e.*, whether the defendant had to intend to induce the acts that constitute infringement, or instead had to also know that the law would treat

those acts as infringing. There was no suggestion that the defendants, though knowing of the acts, were oblivious to whether they infringed as a legal matter. Nor could there have been. Users were sharing popular music, like the latest Top 40 or Modest Mouse hit, which were all "inevitably copyrighted." *Id.* at 926. *Grokster*'s reference to "purposeful, culpable expression and conduct" is thus perfectly consistent with the common law's requirement that an inducer intend to cause another to commit the act giving rise to liability and act culpably to bring that intent to fruition.

2. *Global-Tech* addressed only whether a defendant must know of a patent's existence to be liable under § 271(b), not whether the defendant also had to know the patent covered its product. The defendant there had copied an overseas version of the plaintiff's deep-fryer but maintained a studious ignorance about whether it was patented. *See* 131 S. Ct. at 2064. For example, the defendant hired a lawyer to conduct a freedom to operate search but never told him it copied the plaintiff's design—information that might have alerted him to look for the plaintiff's patent. *Id.* This Court, relying on the common origin of §§ 271(b) and 271(c) held that § 271(b) requires either knowledge of (or willful blindness to) the patent's existence because, under *Aro Mfg. Co. v. Convertible Top Replacement Co.*, 377 U.S. 476 (1964) (*Aro II*), § 271(c) has a similar requirement:

> This question closely divided the *Aro II* Court. In a badly fractured decision, a majority concluded that knowledge of the patent was needed....

> Based on this premise, it follows that the same knowledge is needed for induced infringement under § 271(b). As noted, the two provisions have a common origin in the pre-1952 understanding of contributory infringement, and the language of the two provisions creates the same difficult interpretive choice. It would thus be strange to hold that knowledge of the relevant patent is needed under § 271(c) but not under § 271(b).

See 131 S. Ct. at 2067-68. The Court did not have any other question before it. There was no argument that, even assuming the defendant knew of the patent, it could have a good faith belief the patent didn't cover its product. And for good reason—the defendant copied the plaintiff's product, so the patent had to cover the defendant's product, absent the unlikely scenario that the plaintiff had written a patent that didn't cover its own product.

Nothing else in *Global-Tech* requires a different reading. It is true that the opinion contained language that could be read to suggest it resolved this broader issue. *See, e.g.*, *Global-*Tech, 131 S. Ct. at 2063 (identifying the issue as whether the defendant "must know that the induced acts constitute patent infringement"); *id.* at 2068 ("[W]e now hold that induced infringement under § 271(b) requires knowledge that the induced acts constitute patent infringement."). But these statements cannot be considered conclusive on an issue that was neither briefed nor argued. *See, e.g., Webster v. Fall*, 266 U.S. 507, 511 (1925) ("Questions which merely lurk in the record, neither brought to the attention of the court nor ruled upon, are not to be considered as having been so decided as to constitute precedents.").

Moreover, *Global-Tech*'s rationale does not require extending it to require proof that the defendant knew the acts it was inducing were covered by (i.e., "infringing") the plaintiff's patent. *Global-Tech* relied on *Aro II*, and *Aro II* did not address this issue either. Rather, *Aro II* held the defendant had the required knowledge under § 271(c) after the patentee sent it a letter informing it of the patent. *See* 377 U.S. at 490-91. The *Aro II* court never suggested that the plaintiff also had to prove that the defendant did not believe the patent covered the accused acts. Receipt of the letter alone was sufficient. And, as in *Global-Tech*, the *Aro II* court's references to knowledge the accused acts "constituted infringement," *see* 377 U.S. at 488, related simply to whether the defendant knew of the patent and thus had reason to believe it covered those acts.

That aside, there is a critical difference between the statutory language in §§ 271(b) and (c)—the latter refers to knowledge of "infringement" while the former does not. That Congress purposely omitted this language from § 271(b) strongly suggests it does not contain such a requirement, regardless of what § 271(c) requires. *See, e.g., Russello v. United States*, 464 U.S. 16, 23 (1983) ("[W]here Congress includes particular language in one section of a statute but omits it in another section of the same Act, it is generally presumed that Congress acts intentionally and purposely in the disparate inclusion or exclusion."). Indeed, that is especially true here where, as discussed above, Congress used differing language in §§ 271(b) and (c) to clarify the distinction between the mental states required for inducing and assisting at common law.

C. The Federal Circuit's Rule Conflicts With the Tort Principles Upon Which § 271(b) Was Based.

The Federal Circuit's rule cannot stand given the common law background that Congress invoked in the text of § 271(b). Knowledge or intent the induced acts are tortious is not an element of the tort. RESTATEMENT OF TORTS § 876(a) (1939). Therefore, a defendant's good faith belief that the induced acts do not infringe the patent should not be a defense to inducement, just as, at common law, an inducer's good faith but mistaken belief it owned a piece of land would not excuse it from trespass for liability if it instructed another to enter the land. *Id.* at §§ 158, 164 & cmt. a. And, if a defendant's good faith belief in noninfringement is not a defense, then the Federal Circuit's rationale for extending immunity to those with a good faith belief in invalidity collapses.

The Federal Circuit's rule is also wrong even if one assumes, as the Federal Circuit did, that a good faith belief in noninfringement could preclude inducement liability. Noninfringement and invalidity are distinct concepts under the statute, as evidenced by the fact they are enumerated as separate defenses. *See* 35 U.S.C. § 282(b)(1)-(3). The Solicitor General's excellent analysis at the *certiorari* stage demonstrates that a defendant's belief in invalidity is irrelevant to its knowledge of infringement because "infringement" relates only to whether the patent covers the accused acts. Moreover, the Federal Circuit's rule conflicts with the statutory presumption of validity. *See* 35 U.S.C. § 282(a). Having specifically required a defendant to present clear and convincing evidence to invalidate a patent, *Microsoft Corp. v. i4i Ltd. P'ship*, 131 S. Ct. 2238 (2011), it

would be strange if Congress had also intended for an inducer to avoid liability with its mere say-so the patent was invalid.

Therefore, under either approach, the Federal Circuit's judgment should be reversed.

II. The Federal Circuit's Departure from the Common Law Rule Creates Serious Problems for Innovators.

The Federal Circuit's new rule creates several serious problems that further counsel against departing from the common law approach to inducement. We discuss each in turn.

A. The Federal Circuit's Rule Conflicts With Congress's Directive That Patents Needed to Protect Investments in Drug Development Should be Enforceable.

1. Departing from the common law rule will severely diminish the patent incentive. Congress enacted § 271(b) to ensure patentees could effectively enforce a patent that was directed to conduct of thousands (or millions) of customers. *See, e.g.*, 80th Cong., 2nd Sess., ser. 21, at 3 (1948) (statement of Giles S. Rich) ("Where a patent is being infringed by a large number of scattered individuals all of whom have been caused to infringe by the same person, the practical way to stop the infringement is to sue the man who caused the infringement, rather than the multitude of persons who are infringing.").

Patents on new medical treatment methods present precisely that problem. The doctor or patient is the direct infringer and would be liable if her conduct is covered by the patent, regardless of her state of mind. But it is a generic drug company that induces

them to perform the patented method by providing the drug and including a label and prescription information that instruct them on how and when to use it—*e.g.*, that lists the diseases the drug is approved to treat and the approved dosing regime. The generic intends for customers to follow those instructions. Otherwise, the medicine wouldn't treat the disease, and there would be no reason to prescribe or use it. Yet, under the Federal Circuit's rule, the generic would not be liable under § 271(b) if it had any noninfringement or invalidity defense.

Every generic will have such a defense. A generic that wants to enter the market before patent expiration must certify to the FDA that any patents covering the drug or its use identified by the innovator are either not infringed or invalid. *See* 21 U.S.C. § 355(j)(2)(A)(vii)(IV). This certification starts the deadline for filing an infringement suit. *Id.* at § 355(j)(c)(2)(C). So under the Federal Circuit's rule, it would appear that no generic manufacturer could be held liable for inducing infringement.

That result directly contradicts Congress's directive that innovators should be able to enforce treatment method patents. Congress created a specific cause of action to allow such enforcement. *See* 35 U.S.C. § 271(e)(2)(A) ("It shall be an act of infringement to submit—(A) an application ... for a drug claimed in a patent *or the use of which is claimed in a patent*"). The Federal Circuit has held that an innovator can prove infringement under this provision only by showing generic would infringe "in the conventional sense" if the drug were approved and sold, which means the innovator must prove it would infringe under another provision of section 271. *See, e.g.*, *Glaxo, Inc. v. Novopharm., Ltd.*, 110

F.3d 1562, 1569 (Fed. Cir. 1997). But that would now seemingly be impossible. Every generic will have a noninfringement or invalidity defense, and thus no generic will have the mental state the Federal Circuit has required for liability. Generics could copy the patented drug verbatim and rely on the flimsiest of invalidity defenses to avoid all liability, despite the statutory presumption that the patent is valid. *See* 35 U.S.C. § 282. And they could do so even though Congress specifically provided that innovators would be able to obtain injunctive relief, past damages for any generic launch while the litigation was pending, and an order preventing FDA final approval of the generic until patent expiration. *See* 35 U.S.C. § 271(e)(4). That cannot be right.

Disrupting Congress's carefully crafted procedure for innovators to enforce their treat method patents in this manner would severely threaten the development of new drugs. Innovator companies rely on enforcing treatment method patents to fund their development efforts. It costs between $800 million to $1.2 billion to bring the average new drug to market. *See, e.g.*, Congressional Budget Office, RESEARCH AND DEVELOPMENT IN THE PHARMACEUTICAL INDUSTRY 2 (Oct. 2006). The patent system enables innovators to recoup these costs. "By preventing rival firms from free riding on the innovating firms' discoveries, patents can enable pharmaceutical firms to cover their fixed costs and regain the capital they invest in R&D efforts." FTC Report, *To Promote Innovation: The Proper Balance of Competition and Patent Law and Policy*, Ch. 3, p. 4 (2003). Without the patent incentive, innovators would be unable to recoup these costs, and thus unable to develop new drugs. *See, e.g.*, Benjamin N. Roin, Unpatentable Drugs and the Standards of Patentability, 87 TEX. L. REV. 503, 512-

13 (2009) ("[P]atents appear to be a prerequisite for the vast majority of pharmaceutical innovation.... Indeed, drug researchers who work in government and academia report that when they are looking for partners in private industry to fund the development of the drugs they discover, it is almost impossible to attract interest unless the drugs are patented."). Pharmaceuticals are thus the "poster child for the patent system." *See* Richard A. Posner, *Why There Are Too Many Patents in America*, THE ATLANTIC (Jul. 12, 2012), *available at* http://theatln.tc/1ADkQo3.

The Federal Circuit's rule is especially harmful because treatment method patents are particularly important types of patents for innovators. Unlike patents to new compounds, which are written early in development and often before innovators have a clear sense of the compound's true importance, treatment method patents are written much closer to when clinical trials are run and patients are actually treated. So treatment method patents are often necessary to protect the innovator's true investment, as the clinical trials are the most expensive part of drug development. Yet the Federal Circuit's rule seems to deny innovators the ability to enforce these very patents.

2. Some commentators have suggested that the Federal Circuit's approach would at least leave a patentee with the possibility of obtaining prospective relief against an infringer. *See, e.g.*, Timothy R. Holbrook, *The Intent Element of Induced Infringement*, 22 SANTA CLARA HIGH TECH. L.J. 399, 409 (2005). This seems correct. Once a defendant loses the lawsuit, it can no longer say that it has a good faith belief in noninfringement or invalidity. But,

although this might appear to mitigate some of the consequences of the Federal Circuit's rule, it still presents at least two problems that render the rule unworkable.

First, it is hard to place when the defendant has really "lost." A defendant who loses the trial can still take an appeal to the Federal Circuit, and, if it loses there, it can seek *certiorari* in this Court. Defendants with a non-frivolous appeal will likely argue that they still maintain their good faith belief in non-infringement or invalidity during this time. So it would seem that no injunction could issue during this period and no damages could accrue. Worse yet, a defendant might still have options even after this Court denies *certiorari*. A defendant could always request the Patent Office to conduct a new *ex parte* reexamination of the patent's validity if it can raise any "substantial new question of patentability" the Office has not previously considered. *See* 35 U.S.C. §§ 302, 303. The Patent Office grants such requests almost automatically—its statistics from 2013 show that 92% were granted. *See* U.S. Patent & Trademark Office, *Ex Parte Reexamination Filing Data* (Sept. 30, 2013), *available at* http://1.usa.gov/1xprGfM. So a defendant could file such a request while its appeals were pending, and point to the Patent Office's near-certain grant of the request as evidence that its good faith belief in invalidity is still alive and well.

Second, and relatedly, it takes a long time for a defendant to lose in patent litigation. The average patent case that goes to trial spends over 2.5 years in the district court. *See, e.g.*, PWC, *2014 Patent Litigation Study*, at p. 16, *available at* http://bit.ly/1xpusBU. It then waits almost another

year on appeal to the Federal Circuit. *See* U.S. Court of Appeals for the Federal Circuit, Median Time to Disposition in Cases Terminated After Hearing or Submission, *available at* http://1.usa.gov/17Z0jmU (median disposition time of 11.3 months in 2013). And an appropriately timed reexamination would drag the proceedings on for over 2 more years. *See* U.S. Patent & Trademark Office, *Ex Parte Reexamination Filing Data* (Sept. 30, 2013), *available at* http://1.usa.gov/1xprGfM (median pendency of 27.8 months). So the defendant's alleged good faith belief during litigation would run over 5.5 years, precluding any remedy during this period. The innovator would also lose any past damages that accrued before the suit was brought. The result would be to eliminate any remedy whatsoever for a substantial part of the patent term. *See* 35 U.S.C. § 154 (setting patent term at 20 years from filing, with adjustments for PTO delays in processing the application). Pharmaceutical firms suffer particularly from the loss of effective patent term, as they already lose years of term while their products are undergoing the clinical tests necessary for FDA approval. *See* Posner, *Why There Are Too Many Patents in America*, THE ATLANTIC (Jul. 12, 2012).

These problems can combine to cause a particularly profound problem for pharmaceutical companies who seek to enforce patents against generic applicants. An innovator pharmaceutical company with a valid patent that covers use of the generic needs an injunction immediately, before the generic launches its product. The reason is that once the generic starts selling its product, it immediately acquires most of the innovator's market share. *See, e.g.*, Kyle Grabowski, et al., *Evolving Brand-Name and Generic Drug Competition May Warrant a Revi-*

sion of the Hatch-Waxman Act, 30 HEALTH AFFAIRS 2157, 2162-63 (2011) (explaining a branded drug loses 63% of its share after a month and 85% after a year to the generic). The effects of generic entry are difficult, and perhaps impossible, to undo, even if the entry turns out to unlawful because the patent is later found infringed and valid. The innovator's price may remains deflated even after the generic is subsequently excluded because of agreements the innovator had to make to retain formulary access for its product. *See, e.g.*, Y. Pechersky, *To Achieve Closure of the Hatch-Waxman Act's Loopholes, Legislative Action is Unnecessary: Generic Manfuactures Are Able to Hold Their Own*, 25 Cardozo Arts & Ent. L.J. 775, 799 (2007). As a result, the innovator can no longer charge the price needed for it to recoup its investment in developing the drug.

The Federal Circuit's rule, however, creates a situation in which such market-destroying generic launches could become common. As discussed above, an innovator that "wins" the trial may still not be able to obtain any injunctive relief (or an order delaying the generic's approval date) if the generic intends to take an appeal and maintains its belief in invalidity or noninfringement during the appeal. In the interim, the generic could obtain final approval and launch its product "at risk," thus destroying the innovator's market. Even if the innovator wins the appeal, it will be too late for it to recapture the market. And, worse still, it would be unable to recover all the past damages from the generic's launch at risk, because the generic would have acted at a time when it still supposedly had a good faith belief in invalidity. The effects of such a rule would be disastrous for drug development.

An example will illustrate the problem. In August 2006, a generic company (Apotex) launched a copycat version of Plavix®, a blood thinner used to prevent stroke and heart attack, even though litigation with the patentholder, Sanofi, was ongoing. *See* Pechersky, 25 Cardozo Arts & Ent. L.J. at 797-801. Sanofi obtained a preliminary injunction three weeks later, but it was too late. Apotex had already captured 75% of the U.S. market, and it held a majority share for months after the district court's injunction, as it had already flooded retailers and wholesalers before the injunction. *Id.* The resulting damages award was $442 million, which was upheld on appeal. *See Sanofi-Aventis v. Apotex, Inc.*, 659 F.3d 1171, 1176-77 (Fed. Cir. 2011). Yet Apotex had maintained noninfringement and invalidity defenses until 2008, well after its pre-judgment product launch. *Id.* at 1174. So, if a similar dispute arose today concerning a treatment method patent, then, under the Federal Circuit's rule, the innovator would not be permitted to collect a penny of that damages award, even though Congress specifically intended that the patentee should be permitted to collect such damages. *See* 35 U.S.C. § 271(e)(4)(C).

B. The Federal Circuit's Rule Invites Difficult Mini-trials about State of Mind.

There are other practical reasons why ignorance of the law is rarely a defense to tort liability, and they all apply equally here. For one thing, as Justice Story explained long ago, a defendant's true state of mind is difficult to assess:

> It is a common maxim, familiar to all minds, that ignorance of the law will not excuse any person, either civilly or criminally; and *it results from the extreme difficulty of ascertaining*

> *what is, bona fide, the interpretation of the party*; and the extreme danger of allowing such excuses to be set up for illegal acts to the detriment of the public. There is *scarcely any law which does not admit of some ingenious doubt*; and there would be perpetual temptations to violations of the laws, if men were not put upon extreme vigilance to avoid them.

Barlow v. United States, 32 U.S. 404 (1833).

Both parts of Justice Story's critique are as applicable to patent cases as to any other. There will often be little direct evidence regarding the defendant's pre-suit state of mind, and much of that may be protected by attorney-client privilege. And, post-suit, the defendant will say it relies in good faith on its trial defenses, and almost everything relevant to those will be privileged. The patentee will have difficulty proving a defendant does not actually believe those defenses given its inability to collect evidence on that issue.

Moreover, it will be easy for defendants to fabricate an "ingenuous doubt" about whether the patent was either infringed or invalid. Patent litigation involves issues of notorious complexity. *See, e.g.*, Henry J. Friendly, FEDERAL JURISDICTION: A GENERAL VIEW 156-57 ("[T]he courts must also deal today with a great number of patents in the higher reaches of electronics, chemistry, biochemistry, pharmacology, optics, harmonics, and nuclear physics, which are quite beyond the ability of the usual judge to understand without the expenditure of an inordinate amount of educational effort by counsel and of attempted self-education by the judge, and in many instances, even with it."). There is thus a high risk that defendants will abuse the Federal Circuit's new

defense to feign doubt about noninfringement or invalidity when there is really none. And the technology is often so complex that it will be difficult for the court (or a jury) to question the defendant's sincerity.

For another thing, incorporating a mistake of law defense into § 271(b) would create difficult issues regarding the attorney-client privilege. Would a defendant that wants its CEO to testify that he believed the patent was not infringed or invalidity have to disclose whatever underlying legal advice led the CEO to that conclusion? If so, how far would this waiver of privilege extend—just to pre-suit communications with in-house counsel, or also to post-suit communication with trial counsel? The Federal Circuit already had to grapple with many of those difficult questions in the context of cases involving enhanced damages under 35 U.S.C. § 284 for willful infringement. *See, e.g., In re Seagate*, 497 F.3d 1360 (Fed. Cir. 2007) (*en banc*); *Knorr-Bremse v. Dana Corp.*, 383 F.3d 1337 (*en banc*). And Congress attempted to deal with the part of the problem in 2011, enacting a provision that failure to obtain advice of counsel cannot be used to prove inducement. *See* 35 U.S.C. § 298. But the complicated privilege issues will still remain when the defendant puts its state of mind at issue with testimony about conclusions that were based on a privileged analysis.

What is more, the Federal Circuit's rule could have a chilling effect on small patentees who want to enforce their patents against competitors who have copied their technology. *Cf. Jerman*, 130 S. Ct. at 1623 (rejecting a proposed interpretation of the Federal Debt Collection Practices Act that would make liability turn on a debt collector's subjective intent to violate the act because of its chilling effect on small

plaintiffs). Many small patentees already strain to afford the average fees and costs involved in litigating a patent case. *See, e.g.*, AIPLA 2013 Report of the Economic Survey, *available at* http://bit.ly/1yF9L9h (reporting patent litigation costs an average of $970K-$5.9 million, depending on the amount in controversy). But, now, if past damages through a "final" judgment are off the table, many of these patentees may decide that even meritorious litigation is no longer worth it. Smaller pharmaceutical firms will face a related but different threat. They have no choice but to try and enforce their patents because patent protection is needed to cover their development costs. But many smaller firms develop by relying on investors to fund their initial research and then licensing their patents to larger companies, which run clinical trials and bring the drug to market. That investment could dry up if those patents are effectively unenforceable.

* * *

There is no reason to create any of these potential problems. Both the statutory text and centuries of common law show that mistake of law is not a defense to inducement. This Court should thus correct that error in the Federal Circuit's analysis.

CONCLUSION

For the reasons above, *amicus* encourages the Court to reverse and hold that a defendant is liable under § 271(b) when it induces another to commit acts that constitute direct infringement, and intends that the other perform those acts, regardless of the defendant's beliefs about whether the patent covers those act or about validity.

Respectfully submitted,

CRAIG E. COUNTRYMAN
Fish & Richardson P.C.
12390 El Camino Real
San Diego, CA 92130
(858) 678-5070

JONATHAN E. SINGER
Counsel of Record
Fish & Richardson P.C.
3200 RBC Plaza
60 South Sixth Street
Minneapolis, MN 55402
(612) 335-5070

Counsel for *Amicus Curiae* Gilead Sciences, Inc.

AMICUS CURIAE BRIEF

Supreme Court, U.S.
FILED
JAN 26 2015
OFFICE OF THE CLERK

No. 13-896

IN THE

Supreme Court of the United States

COMMIL USA, LLC,

Petitioner,

v.

CISCO SYSTEMS, INC.,

Respondent.

ON WRIT OF CERTIORARI TO THE UNITED STATES COURT OF APPEALS FOR THE FEDERAL CIRCUIT

BRIEF FOR INTELLECTUAL PROPERTY OWNERS ASSOCIATION AS *AMICUS CURIAE* IN SUPPORT OF PETITIONER

Of Counsel:

PHILIP S. JOHNSON,
President
KEVIN H. RHODES,
Chair, Amicus Brief Committee
INTELLECTUAL PROPERTY OWNERS ASSOCIATION
1501 M Street, NW, Suite 1150
Washington, DC 20005
(202) 507-4500

PAUL H. BERGHOFF
Counsel of Record
NATHANIEL P. CHONGSIRIWATANA
MCDONNELL BOEHNEN HULBERT & BERGHOFF LLP
300 South Wacker Drive
Chicago, Illinois 60606
(312) 913-0001
berghoff@mbhb.com

Counsel for Amicus Curiae

257603

COUNSEL PRESS
(800) 274-3321 • (800) 359-6859

Library of Congress
Law Library

TABLE OF CONTENTS

Page

TABLE OF CONTENTS i

TABLE OF CITED AUTHORITIES ii

INTEREST OF *AMICUS CURIAE* 1

SUMMARY OF THE ARGUMENT 2

ARGUMENT 3

I. The Federal Circuit's holding that a good-faith belief in patent invalidity is a defense to inducement is incompatible with the text and intent of the patent statute 3

II. The good-faith belief defense substantially devalues valid patent rights and effectively nullifies the ability of a patent owner to prove inducement under Section 271(b) 6

III. The Federal Circuit's effective gutting of induced infringement will significantly impact the ability of patent owners to enforce their valid patent rights against infringing competitors 7

IV. Permitting defendants a good-faith belief defense to inducement will increase the cost of enforcing valid patent rights against infringers 8

CONCLUSION 9

APPENDIX 10

TABLE OF CITED AUTHORITIES

Page

Cases

Cardinal Chemical v. Morton International,
508 U.S. 83 (1993) 4-5

Commil USA, LLC v. Cisco Systems, Inc.,
720 F.3d 1361 (Fed. Cir. 2013)..... *passim*

Global-Tech Appliances, Inc. v. SEB S.A.,
131 S. Ct. 2060 (2011)..... 4

Medtronic, Inc. v. Cardiac Pacemakers, Inc.,
721 F.2d 1563 (Fed. Cir. 1983) 5

Pandrol USA, LP v. Airboss Ry. Products, Inc.,
320 F.3d 1354 (Fed. Cir. 2003) 5

Spectra-Physics, Inc. v. Coherent, Inc.,
827 F.2d 1524 (Fed. Cir. 1987) 5

Statutes

35 U.S.C. § 101 6

35 U.S.C. § 102 6

35 U.S.C. § 103 6

35 U.S.C. § 112 6

Cited Authorities

Page

35 U.S.C. § 271(a) 3

35 U.S.C. § 271(b) ..... *passim*

35 U.S.C. § 282(b) 2

Other Authorities

Brief of the United States as *Amicus Curiae*, Commil USA, LLC v. Cisco Systems, Inc., No. 13-896 (U.S. 2014) 4

Brian Coggio, *Avoid Inducement Liability With Early Opinion Of Counsel*, LAW360 (2014) 6

Dmitry Karshtedt, *Damages for Indirect Patent Infringement*, 91 WASH. U.L. REV. 911 (2014) 7

INTEREST OF *AMICUS CURIAE*

Amicus curiae Intellectual Property Owners Association (IPO) is a trade association representing companies and individuals in all industries and fields of technology who own or are interested in intellectual property rights.[1] IPO's membership includes more than 200 companies and over 12,000 individuals who are involved in the association either through their companies or as inventor, author, executive, law firm, or attorney members. Founded in 1972, IPO represents the interests of all owners of intellectual property. IPO regularly represents the interests of its members before Congress and the U.S. Patent and Trademark Office and has filed *amicus curiae* briefs in this Court and other courts on significant issues of intellectual property law. The filing of this brief was approved by the IPO Board of Directors. A list of the IPO board members can be found in the Appendix.[2]

IPO submits this brief in support of reversing the Federal Circuit's holding that an accused infringer's good-faith belief in a patent's invalidity may be a defense to inducement under 35 U.S.C. § 271(b).

---

1. No counsel for a party authored this brief in whole or in part, and no such counsel or party made a monetary contribution intended to fund the preparation or submission of this brief. No person other than the *amicus curiae* or its counsel made a monetary contribution to its preparation or submission. The parties have consented to the filing of this brief.

2. IPO procedures require approval of positions in briefs by a two-thirds majority of directors present and voting.

SUMMARY OF THE ARGUMENT

In the decision below, the Federal Circuit held that an accused infringer's good-faith belief in a patent's invalidity may negate the requisite intent for induced infringement under 35 U.S.C. § 271(b), thereby creating a brand new defense to inducement. *Commil USA, LLC v. Cisco Systems, Inc.*, 720 F.3d 1361, 1368 (Fed. Cir. 2013).

This new defense is unsupported by the text of Section 271(b), which nowhere mentions validity. Indeed, the patent statute lists noninfringement and invalidity as separate and distinct defenses in Section 282(b). Infringement and validity are independent questions and, although invalidity may preclude a defendant's *liability* in a patent suit, it does not preclude a finding of infringement.

In practice, the Federal Circuit's decision in *Commil* renders inducement wholly ineffectual as a patent enforcement tool. As a direct result of *Commil*, potential infringers now routinely obtain opinions of counsel that the patent at issue is invalid because such opinions present an ironclad defense to inducement, regardless of the opinion's accuracy. The end result is that virtually all potential infringers can easily absolve themselves of liability for inducing infringement of a valid patent for the price of an opinion letter from counsel.

Without the ability to impose liability for inducement, many patent owners will be left with no effective way to enforce their patent rights. For example, in many cases where products and services are protected by method claims, only customers actually practice the patented methods. By contrast, the competitors that profit by

producing the goods and services used by the infringing customers are only liable as inducers. Absent a practical way to prove inducement, patent owners' only recourse would be to sue end users, an avenue that is often impractical, not to mention potentially destructive of customer relations.

Accordingly, IPO believes that a good-faith belief in a patent's invalidity should not be a defense to inducement under 35 U.S.C. § 271(b) and the Federal Circuit's decision in *Commil* should be reversed.

ARGUMENT

I. The Federal Circuit's holding that a good-faith belief in patent invalidity is a defense to inducement is incompatible with the text and intent of the patent statute.

IPO believes that the Federal Circuit's novel holding that a defendant's good-faith belief in the invalidity of a patent may be a defense to inducement under 35 U.S.C. § 271(b) is inconsistent with the text of the Patent Act.

According to the statute, direct infringement under Section 271(a) occurs when "whoever without authority makes, uses, offers to sell, or sells any patented invention, within the United States or imports into the United States any patented invention during the term of the patent therefor ... ." Section 271(b) then defines inducement liability in terms of direct infringement: "Whoever actively induces infringement of a patent shall be liable as an infringer."

Neither of these sections mentions patent validity or invalidity, let alone a defendant's belief—whether in good or bad faith—that a patent is invalid. Rather, a patent is infringed, regardless of its validity, if the defendant has practiced all of its elements without authorization. *See Global-Tech Appliances, Inc. v. SEB S.A.*, 131 S. Ct. 2060, 2065 n.2 (2011) ("Direct infringement has long been understood to require no more than the unauthorized use of a patented invention. Thus, a direct infringer's knowledge or intent is irrelevant.") (citations omitted).[3]

The Patent Act lists noninfringement (Section 282(b)(1)) and invalidity (Section 282(b)(2)-(3)) as separate defenses to a claim of patent infringement. The statute's segregation of infringement and validity further weighs against the Federal Circuit's blurring of the two.

In forming its opinion in *Commil*, the Federal Circuit reasoned, "it is axiomatic that one cannot infringe an invalid patent." 720 F.3d at 1368. IPO believes this reasoning is faulty. First, this Court previously considered infringement and validity to be independent questions in *Cardinal Chemical v. Morton International*, 508 U.S.

---

3. As indicated by the Solicitor General's brief supporting the granting of certiorari, Global-Tech did not state a clear standard for what level of knowledge is required to establish the intent element under Section 271(b). Brief of the United States as *Amicus Curiae* at 9, *Commil USA, LLC v. Cisco Systems, Inc., Cisco Systems, Inc. v. Commil USA, LLC*, Nos. 13-896 and 13-1044 (U.S. Oct. 16, 2014). IPO believes that knowledge (or willful blindness) of a patent coupled with intentional inducement of the acts that constitute infringement should satisfy the intent requirement of Section 271(b). Knowledge that there is legal liability for patent infringement should not be required.

83 (1993). In *Cardinal*, this Court rejected the Federal Circuit's practice of routinely vacating declaratory judgments regarding patent validity following a determination of noninfringement, reasoning that the noninfringement determination does not moot the question of validity. Second, the Federal Circuit has adopted this Court's reasoning in its decision in *Pandrol USA, LP v. Airboss Ry. Products, Inc.*, 320 F.3d 1354, 1364 (Fed. Cir. 2003) (citing *Cardinal* and *Medtronic* in asserting that "Supreme Court precedent and our cases make clear that patent infringement and patent validity are treated as separate issues.") Indeed, Judge Giles Rich, one of two principal draftsmen of the 1952 Patent Act, referred to the assertion that "invalid claims cannot be infringed" as "a nonsense statement." *Spectra-Physics, Inc. v. Coherent, Inc.*, 827 F.2d 1524, 1535 (Fed. Cir. 1987), cert. denied, 484 U.S. 954 (1987). Thus, IPO submits that the foundation on which the Federal Circuit based its holding is far from "axiomatic."

IPO believes that a more accurate—and textually consistent—way of characterizing the relationship between infringement and validity is that invalidity precludes a defendant's *liability*, but does not negate the fact of infringement. *See Medtronic, Inc. v. Cardiac Pacemakers, Inc.*, 721 F.2d 1563, 1583 (Fed. Cir. 1983) ("Though an invalid claim cannot give rise to liability for infringement, whether it is infringed is an entirely separate question capable of determination without regard to its validity."). Therefore, IPO believes that a defendant's good-faith belief of invalidity should not negate induced infringement of an otherwise valid patent.

II. The good-faith belief defense substantially devalues valid patent rights and effectively nullifies the ability of a patent owner to prove inducement under Section 271(b).

Under the Federal Circuit's *Commil* decision, many owners of valid patents will be unable to prove inducement under Section 271(b), thereby effectively devaluing legitimate intellectual property rights.

If a good-faith belief in invalidity is all that is required to defend against an assertion of inducement, an accused infringer need only secure an opinion of counsel that the patent in question is invalid on some basis or another, a very modest requirement given the menu of potential grounds of invalidity.[4] Unsurprisingly, obtaining such an opinion has become the uniform recommendation and practice of the patent bar in response to the Federal Circuit's decision. *See, e.g.*, Brian Coggio, *Avoid Inducement Liability With Early Opinion Of Counsel*, Law360 (Mar. 21, 2014, 11:55 AM), http://www.law360.com/articles/516267/avoid-inducement-liability-with-early-opinion-of-counsel.

That inducement can be negated by a mere belief makes obtaining and relying on an invalidity opinion a particularly trivial obstacle, since the veracity or accuracy of such an opinion is wholly irrelevant—it only need give rise to a good-faith belief. And because of the simplicity of

4. Possible grounds for patent invalidity include, *inter alia*, lack of utility under 35 U.S.C. Section 101, lack of patent-eligible subject matter under Section 101, lack of novelty under Section 102, non-obviousness under Section 103, lack of written description under Section 112, and lack of enablement under Section 112.

obtaining such an opinion of counsel, virtually all accused infringers will completely avoid liability for inducing infringement even though the patent being infringed is valid. The practical effect of the Federal Circuit's novel interpretation of the patent statute is to nullify the ability of patent owners to prove inducement.

III. The Federal Circuit's effective gutting of induced infringement will significantly impact the ability of patent owners to enforce their valid patent rights against infringing competitors.

In IPO's experience, Section 271(b) provides the only practical means by which patent owners can enforce a substantial proportion of patents. IPO believes that, by rendering Section 271(b) largely inoperative, the Federal Circuit's newly created defense will have a substantial and detrimental impact on many industries.

As one example, many products and services are best (and validly) protected by method claims. Ideally, patent owners would enforce such claims against the parties that manufacture or produce the products and services used to practice the patented method claims. After all, these unauthorized competitors are the ones that profit from the infringing activity and directly inflict commercial damage on the patent owner by actively inducing end users (*i.e.*, customers) to practice the patented method through marketing or instructional materials. However, in many cases, only end users actually practice the patented method and directly infringe the claim. *See, e.g.*, Dmitry Karshtedt, *Damages for Indirect Patent Infringement*, 91 WASH. U.L. REV. 911, 917-18 (2014) ("[A] typical scenario in an inducement of patent infringement case occurs when

a manufacturer sells a product that includes patented technology and comes with instructions or other tools that direct end users to employ it in such a way as to infringe the patent directly . . . .").

Under the Federal's Circuit's decision in *Commil*, a competitor who actively induces infringement of a patented method is freed of any liability merely by obtaining an opinion of counsel that the patent claims are invalid, even if that opinion is later determined by the court or jury to be in error. The patent owner, on the other hand, is left with no practical means of addressing this infringement at its source.

IV. Permitting defendants a good-faith belief defense to inducement will increase the cost of enforcing valid patent rights against infringers.

IPO believes that the appellate court's new good-faith belief of invalidity defense will make patent enforcement substantially more costly.

First, in the absence of an effective remedy for inducement infringement under Section 271(b), IPO believes many patent owners' only recourse for enforcement will be to sue multiple end users. Not only is this alternative more expensive and highly inefficient for patent owners, it will impose an additional burden on the federal judiciary. And because suits against actual or potential customers are unpalatable for patent owners and end users alike, many owners of perfectly valid patents will be left with no viable avenues for enforcement against infringing competitors.

Second, because "an accused inducer's good-faith belief of invalidity . . . . is evidence that should be considered by the fact finder," IPO believes that the Federal Circuit's holding will increase the duration and complexity of patent trials by adding yet another issue to be considered by the already overburdened trier of fact. *Commil*, 720 F.3d at 1368-69. The scope (and cost) of discovery will necessarily be expanded as well.

CONCLUSION

IPO believes that the Federal Circuit's holding in *Commil* that a good-faith belief in a patent's invalidity may serve as a defense to induced infringement should be reversed. IPO believes that such a defense is an unwarranted Get-Out-Of-Jail-Free card that greatly reduces or eliminates the value of validly issued patents, especially for those patent owners whose only practical recourse is to prove liability through inducement.

Respectfully submitted,

Of Counsel:

PHILIP S. JOHNSON,
President
KEVIN H. RHODES,
Chair, Amicus Brief Committee
INTELLECTUAL PROPERTY OWNERS ASSOCIATION
1501 M Street, NW, Suite 1150
Washington, DC 20005
(202) 507-4500

PAUL H. BERGHOFF
Counsel of Record
NATHANIEL P. CHONGSIRIWATANA
MCDONNELL BOEHNEN HULBERT & BERGHOFF LLP
300 South Wacker Drive
Chicago, Illinois 60606
(312) 913-0001
berghoff@mbhb.com

Counsel for Amicus Curiae

APPENDIX

Members of the Board of Directors Intellectual Property Owners Association

Steven Arnold
Micron Technology, Inc.

Edward Blocker
Koninklijke Philips N.V.

Tina M. Chappell
Intel Corp.

William J. Coughlin
Ford Global
Technologies LLC

Robert DeBerardine
Sanofi-Aventis

Anthony DiBartolomeo
SAP AG

Daniel Enebo
Cargill, Inc.

Barbara A. Fisher
Lockheed Martin

Louis Foreman
Enventys

Scott M. Frank
AT&T

David A. Frey
Rolls-Royce Corp.

Darryl P. Frickey
Dow Chemical Co.

Krish Gupta
EMC Corporation

Henry Hadad
Bristol-Myers Squibb Co.

Jennifer M. Hall
Mars Inc.

Carl B. Horton
General Electric Co.

Michael Jaro
Medtronic, Inc.

Philip S. Johnson
Johnson & Johnson

Charles M. Kinzig
GlaxoSmithKline

David J. Koris
Shell International B.V.

William Krovatin
Merck & Co., Inc.

Allen Lo
Google Inc.

Thomas P. McBride
Monsanto Co.

Steven W. Miller
Procter & Gamble Co.

Micky Minhas
Microsoft Corp.

Douglas K. Norman
Eli Lilly and Co.

Elizabeth A. O'Brien
Covidien

Salvatore Pace
Praxair, Inc.

Richard F. Phillips
Exxon Mobil Corp.

Dana Rao
Adobe Systems Inc.

Kevin H. Rhodes
3M Innovative
Properties Co.

Curtis Rose
Hewlett-Packard Co.

Matthew Sarboraria
Oracle USA Inc.

Manny Schecter
IBM Corp.

Steven J. Shapiro
Pitney Bowes Inc.

Dennis C. Skarvan
Caterpillar Inc.

Daniel J. Staudt
Siemens Corp.

Brian K. Stierwalt
ConocoPhillips

Thierry Sueur
Air Liquide

Brian Suffredini
United Technologies
Corp.

James J. Trussell
BP America, Inc.

Roy Waldron
Pfizer, Inc.

Michael Walker
DuPont

BJ Watrous
Apple Inc.

Stuart L. Watt
Amgen, Inc.

Charlotte Whitaker
Motorola Solutions, Inc.

Jon D. Wood
Bridgestone Americas
Holding, Inc.

Michael Young
Roche, Inc.

AMICUS CURIAE BRIEF

Supreme Court, U.S.
FILED
JAN 27 2015
OFFICE OF THE CLERK

No. 13-896

IN THE
SUPREME COURT OF THE UNITED STATES

COMMIL USA, LLC, *Petitioner*,

v.

CISCO SYSTEMS, INC., *Respondent*.

ON WRIT OF CERTIORARI TO THE UNITED STATES COURT OF APPEALS FOR THE FEDERAL CIRCUIT

BRIEF FOR *AMICUS CURIAE* MUSC FOUNDATION FOR RESEARCH DEVELOPMENT IN SUPPORT OF COMMIL USA, LLC

PETER J. CORCORAN, III
Counsel of Record
CORCORAN IP LAW, PLLC
2509 Richmond Road
Suite 380
Texarkana, Texas 75503
peter@corcoranip.com
(903) 701-2481

SAMUEL F. BAXTER
JOHN F. GARVISH, II, PH.D.
MCKOOL SMITH, P.C.
300 Crescent Court
Suite 1500
Dallas, Texas 75201
300 W. 6th Street
Suite 1700
Austin, Texas 78701

MARK J. GATSCHET, PH.D.
MARK JOHN GATSCHET, PLLC Austin, Texas

RICHARD W. KNIGHT
R. W. KNIGHT, P.C.
San Antonio, Texas

January 27, 2015

QUESTION PRESENTED

Under 35 U.S.C. § 271(b), "[w]hoever actively induces infringement of a patent shall be liable as an infringer." The question presented is:

1. Whether a good-faith belief that a patent is invalid is a defense to inducement liability under § 271(b).

TABLE OF CONTENTS

QUESTION PRESENTED i

TABLE OF CONTENTS ii

TABLE OF CITED AUTHORITIES iv

STATEMENT OF INTEREST OF *AMICUS CURIAE* 1

SUMMARY OF ARGUMENT 3

ARGUMENT 4

I. The Federal Circuit erred in ruling that a defendant's good-faith belief that a patent is invalid is a defense to induced infringement under 35 U.S.C. § 271(b) because Congress and this Court never created such a defense. 4

II. The Federal Circuit's new rule conflicts with the presumption of validity awarded to patents under 35 U.S.C. § 282 and this Court's holding in *Microsoft v. i4i* (2011) that § 282 requires an invalidity defense be proven with clear and convincing evidence 9

III. The Federal Circuit's new rule requires courts to develop a new body of law for induced infringement, contrary to this Court's guidance for § 271(b) in *Limelight v. Akamai* (2014) 13

CONCLUSION 19

TABLE OF CITED AUTHORITIES

CASES

Akamai Techs, Inc. v. Limelight Networks, Inc., 692 F.3d 1301 (Fed. Cir. 2012) (en banc) 14–15

American Hoist & Derrick Co. v. Sowa & Sons, Inc., 725 F.2d 1350 (Fed. Cir. 1984) 13

Aro Mfg. Co. v. Convertible Top Replacement Co., 377 U.S. 476 (1964) (*Aro II*) 6

Bose Corp. v. SDI Technologies, No. 2013-1347, 558 Fed. Appx. 1012 (Fed. Cir. Mar. 14, 2014) 18

Centricut, LLC v. The ESAB Group, Inc., 390 F.3d 1361 (Fed. Cir. 2004) 10

Commil USA, LLC v. Cisco Systems, Inc., 720 F.3d 1361 (Fed. Cir. 2013) (*Commil I*) ..... *passim*

Commil USA, LLC v. Cisco Systems, Inc., 737 F.3d 699 (Fed. Cir. 2013) (*Commil II*) 16–17

Global-Tech Appliances, Inc. v. SEB S.A.,
131 S. Ct. 2060 (2011) 3, 5, 6, 7

Limelight Networks, Inc. v. Akamai Techs, Inc.,
134 S. Ct. 2111 (2014) 3, 13, 14, 15

Mayo Collaborative Services. v. Prometheus Labs, Inc., 132 S. Ct. 1289 (2012) 15

Microsoft Corp. v. i4i Ltd. Partnership,
131 S. Ct. 2238 (2011) 3, 10, 11, 13

STATUTES

35 U.S.C. § 271(a) 5, 14

35 U.S.C. § 271(b) ..... *passim*

35 U.S.C. § 271(c) 5, 6

35 U.S.C. § 282 ..... *passim*

OTHER AUTHORITIES

§ 2173.02 MANUAL OF PATENT EXAMINING PROCEDURE (9th Ed., Mar. 2014) 9

Roger Allan Ford, *Patent Invalidity Versus Noninfringement*, 99 CORNELL L. REV. 71 (2013) (U. Chi. Pub. L. & Legal Theory Working Paper No. 454, 2013) 10–11

Douglas G. Lichtman & Mark A. Lemley, *Presume Nothing: Rethinking Patent Law's Presumption of Validity, in* COMPETITION POLICY AND PATENT LAW UNDER UNCERTAINTY: REGULATING INNOVATION 300–30 (Geoffrey A. Manne & Joshua D. Wright Eds., Cambridge University Press, 2011) 11

Richard M. Marsh, Jr., *The Aftermath of Akamai: Induced Infringement and Opinions of Counsel, in* LANDSLIDE 1–9 (A.B.A. Sect. Intell. Prop. L., 2014) 18

Anthony Patek, Elizabeth Brann, Gary Frischling, Lisa Mueller & Max Waldbaum, *Proposed Subcommittee Report on Federal Circuit En Banc Review of Good-Faith Belief in Invalidity as a Defense to Indirect Infringement*, PAT. INFRINGEMENT SUBCOMM., ABA SECT. INTELL. PROP. L. (Sept. 23, 2013) 12, 13, 17-19

Peter Strand, *New "Belief" Defense To Induced Infringement: Fixing What Isn't Broken?*, *in* IPQ NEWSL., at 1–4 (Shook, Hardy & Bacon, L.L.P., Nov. 2013) 16–17

STATEMENT OF INTEREST OF *AMICUS CURIAE*

Medical University of South Carolina Foundation for Research Development ("MUSC FRD") is a not-for-profit research foundation that has served as the technology transfer office of MUSC since 1995.[1] The foundation has filed over 200 new patent applications, has had over 50 U.S. patents issued, and has spawned over thirty startup companies. These startup companies have had products approved by the FDA, they have been acquired by publicly-traded corporations, and they have attracted substantial investment dollars. These startup companies have also created jobs and contributed to the nation's economy.

MUSC FRD has no stake in the outcome of this case other than a deep and abiding interest in supporting and promoting consistency in the

---

[1] Under Supreme Court Rule 37.6, *amicus curiae* MUSC FRD states that no counsel for a party authored this brief in whole or in part, and that no such counsel or party made a monetary contribution intended to fund the preparation or submission of this brief. No person or entity other than MUSC FRD or its counsel made a monetary contribution to this brief's preparation or submission. Consent for the filing of this brief in support of Commil USA, LLC, was received from counsel for Commil by email dated Jan. 26, 2015, and from counsel for Cisco Systems, Inc., by email dated Jan. 26, 2015.

development of the law, affecting patents and other forms of intellectual property.

SUMMARY OF ARGUMENT

Neither the patent statutes nor any relevant precedent of this Court (including *Global-Tech v. SEB* (2011) discussed herein) supports the Federal Circuit's new, but ill-considered, rule that a defendant's good-faith belief that a patent is invalid is a defense to induced infringement under 35 U.S.C. § 271(b). On the contrary, the Federal Circuit's new rule directly conflicts with the presumption of validity awarded to patents under 35 U.S.C. § 282 and with this Court's holding in *Microsoft v. i4i* (2011) that § 282 requires an invalidity defense to be proven with clear and convincing evidence. Furthermore, the Federal Circuit's new rule will require courts to develop an expansive new body of case law for induced infringement, contrary to this Court's guidance in *Limelight v. Akamai* (2014).

For at least these reasons, MUSC FRD respectfully asks this Court to vacate the Federal Circuit's decision in this case and remand this case the Federal Circuit with instructions to follow this Court's guidance regarding the proper application of induced infringement law.

ARGUMENT

I. The Federal Circuit erred in ruling that a defendant's good-faith belief that a patent is invalid is a defense to induced infringement under 35 U.S.C. § 271(b) because Congress and this Court never created such a defense.

The Solicitor General expressed the following views in its Brief For The United States As *Amicus Curiae* (hereafter "U.S. Br."):

> The court of appeals erred in holding that a person who knowingly induces another to engage in infringing conduct may avoid liability under [35 U.S.C.] Section 271(b) by demonstrating that it had a good-faith belief that the infringed patent was invalid. This Court's review is warranted *to prevent defendants from avoiding inducement liability on a ground that is inconsistent with the text, structure, and purposes of the relevant Patent Act provisions.*

U.S. Br. at 6 (emphasis added).

MUSD FRD fully agrees. One of the most relevant opinions of this Court concerning the Question Presented in this case—both for what it

holds and what it does not hold—is that of *Global-Tech Appliances, Inc. v. SEB S.A.*, 131 S. Ct. 2060 (2011). In *Global-Tech*, this Court considered whether a party who "actively induces infringement of a patent" under § 271(b) must know that the induced acts constitute patent infringement.[2]

After reviewing the language of the statute enacted by Congress and related case law, this Court

---

[2] Sections (a), (b), and (c) of 35 U.S.C. § 271 are cited in this brief.

35 U.S. § 271 Infringement of patent:

> (a) Except as otherwise provided in this title, whoever without authority makes, uses, offers to sell, or sells any patented invention, within the United States or imports into the United States any patented invention during the term of the patent therefor, infringes the patent.
>
> (b) Whoever actively induces infringement of a patent shall be liable as an infringer.
>
> (c) Whoever offers to sell or sells within the United States or imports into the United States a component of a patented machine, manufacture, combination or composition, or a material or apparatus for use in practicing a patented process, constituting a material part of the invention, knowing the same to be especially made or especially adapted for use in an infringement of such patent, and not a staple article or commodity of commerce suitable for substantial noninfringing use, shall be liable as a contributory infringer.

held that "induced infringement under § 271(b) requires knowledge that the induced acts constitute patent infringement." *Global Tech*, 131 S. Ct. 2060, 2068 (2011). Notably, this Court, citing *Aro Mfg. Co. v. Convertible Top Replacement Co.*, 377 U.S. 476 (1964) (*Aro II*), held that under the related language of contributory infringement, "a violator of § 271(c) must know 'that the combination for which his component was especially designed was both patented and infringing,' 377 U.S., at 488," and that the knowledge required for liability under § 271(c) necessarily "compel[s] this same knowledge for liability under § 271(b)." *Global-Tech*, 131 S. Ct. at 2067.

This Court in *Global-Tech* further held that the knowledge required for liability under § 271(b) could be inferred from evidence of "willful blindness" on the part of the inducer, such as "willful blindness" to the high probability that the relevant article of manufacture (in that case, a fryer) was patented. 131 S. Ct. 2060, 2068–72 (2011). As such, this Court signaled that behavior of a would-be inducer to mitigate liability by avoiding "knowledge" through "willful blindness" to the high probability of an article being patented would be to no avail.

Noticeably absent from the *Global-Tech* opinion—and, indeed, counter to this Court's

treatment of inference knowledge in its decision—is a requirement that to find induced infringement, an inducer must (1) know that its inducement resulted in actual infringement of the patent (*i.e.*, know that its inducement actually brought about each claim limitation of the patent), and (2) know the infringed patent to be valid (*e.g.*, know that the claims of the patent are not anticipated or obvious) so that allegedly induced acts will give rise to liability for infringement of a valid patent.[3]

On the contrary, under a principled, fair reading of *Global-Tech*, additional knowledge of (1) or (2) is not required. Instead, *Global-Tech* and the earlier cases on which it relied (*e.g.*, *Aro II*) simply require knowledge of the patent and the patent's applicability to the conduct at issue. *See* Brief of Petitioner at 15–20 (Jan. 20, 2015) (hereafter "Commil Br.") (discussing *Global Tech* and *Aro II*); *id.* at 24–27 (discussing *Global Tech* and this Court's other earlier cases).

---

[3] MUSC FRD distinguishes between a "patent" and a "claim" of a patent. Determinations of patent eligibility, allowability, infringement, and invalidity are all accomplished on a claim-by-claim basis, *e.g.*, as reflected for validity in the second sentence of section (a) of 35 U.S.C. § 282 - Presumption of validity; defenses. *See* note 4, *infra*.

The Solicitor General's brief concurs:

> *Global Tech* does not resolve whether the defendant must know in addition [to a patent's existence] that the conduct actually infringed the patent. But regardless of how that question is ultimately decided, *Section 271(b) neither requires knowledge of the patent's validity nor suggests a good-faith belief in invalidity is a proper defense.*

U.S. Br. at 11 (emphasis added).

Induced infringement under § 271(b) requires that the alleged inducer must have knowledge of the patent and the patent's applicability to the conduct at issue. This statute, as enacted by Congress, does not require knowledge of the patent's validity status. Accordingly, the Federal Circuit "erred in holding a person who knowingly induces another to engage in infringing conduct may avoid liability under Section 271(b) by demonstrating that it had a good faith belief that the infringed patent was invalid." U.S. Br. at 6.

II. The Federal Circuit's new rule conflicts with the presumption of validity awarded to patents under 35 U.S.C. § 282 and this Court's holding in *Microsoft v. i4i* (2011) that § 282 requires an invalidity defense be proven with clear and convincing evidence.

A presumption of validity does not apply to claims of a patent application being prosecuted before the U.S. Patent & Trademark Office ("PTO"). *See* § 2173.02 MANUAL OF PATENT EXAMINING PROCEDURE (9th Ed., Mar. 2014). But after completion of prosecution at the PTO, and upon issuance of a patent application as a bona fide patent, each claim of the patent is thereafter presumed valid. 35 U.S.C. § 282(a).[4] Nowhere in § 282 did Congress provide any

---

[4] 35 U.S.C. § 282 - Presumption of validity; defenses

(a) In General.– A patent shall be presumed valid. Each claim of a patent (whether in independent, dependent, or multiple dependent form) shall be presumed valid independently of the validity of other claims; dependent or multiple dependent claims shall be presumed valid even though dependent upon an invalid claim. The burden of establishing invalidity of a patent or any claim thereof shall rest on the party asserting such invalidity.

(b) Defenses.– The following shall be defenses in any action involving the validity or infringement of a patent and shall be pleaded:

indication that anything less than the full presumption of validity should be given a patent. § 282(b) provides for invalidity as a defense to patent infringement. But that paragraph says nothing about a reasonable belief of invalidity as a possible defense to induced infringement.

Given the presumption of validity, a defendant must prove with "clear and convincing evidence" that a patent claim is invalid in a court proceeding. *Microsoft Corp. v. i4i Ltd. Partnership*, 131 S. Ct. 2238, 2242 (2011). In contrast, a plaintiff need only show by a "preponderance of the evidence" that a defendant infringes a valid patent. *Centricut, LLC v. The ESAB Group, Inc.*, 390 F.3d 1361, 1367 (Fed. Cir. 2004); *see also* Roger Allan Ford, *Patent Invalidity*

---

(1) Noninfringement, absence of liability for infringement or unenforceability.

(2) Invalidity of the patent or any claim in suit on any ground specified in part II as a condition for patentability.

(3) Invalidity of the patent or any claim in suit for failure to comply with—

(A) any requirement of section 112, except that the failure to disclose the best mode shall not be a basis on which any claim of a patent may be canceled or held invalid or otherwise unenforceable; or

(B) any requirement of section 251.

(4) Any other fact or act made a defense by this title.

Versus Noninfringement, 99 CORNELL L. REV. 71, 103 (U. Chi. Pub. L. & Legal Theory Working Paper No. 454, 2013).

Justifications and policy reasons for the elevated burden of proof associated with the presumption of validity include respect for: (1) the examination process at the PTO through which patent claims are honed before issuance (*i.e.*, deference to the PTO), and (2) the increased incentive for a patent holder to invest in the development and commercialization of his or her patented technology (*i.e.*, patent certainty). *See* Douglas G. Lichtman & Mark A. Lemley, *Presume Nothing: Rethinking Patent Law's Presumption of Validity*, *in* COMPETITION POLICY AND PATENT LAW UNDER UNCERTAINTY: REGULATING INNOVATION 307–15 (Geoffrey A. Manne & Joshua D. Wright Eds., Cambridge University Press, 2011).

In *Microsoft v. i4i*, this Court recognized the presumption of validity that § 282 confers, and it affirmed that § 282 requires an invalidity defense be proven with clear and convincing evidence. 131 S. Ct. at 2251–53 (2011). The Federal Circuit's new rule that permits a good-faith belief of invalidity as a defense to induced patent infringement cannot be reconciled with this Court's precedent. This Court has never stated or suggested that a "good-faith belief" equates

to "clear and convincing evidence." Such a new rule presumes the validity of the defendant's belief and improperly shifts the evidentiary burden from the defendant to the plaintiff. The plaintiff must then prove that the defendant's belief is unreasonable, versus the defendant first proving with clear and convincing evidence that a patent is invalid.

Moreover, under the Federal Circuit's new rule, a defendant accused of inducing patent infringement need only show a "good-faith belief" that an asserted patent is invalid in order to escape liability. The defendant no longer must provide "clear and convincing evidence," and it may negate a patent without ever meeting any standard of proof other than its own subjective "reasonable belief." Such a subjective standard is counter to this Court's requirement of providing objective clear and convincing evidence of invalidity.

Furthermore, the defendant's alleged good-faith belief may be presented as evidence that it never intended to induce infringement. That is, a defendant may undermine a plaintiff's induced infringement case with nothing more than a wrongly-held subjective belief of invalidity. *See* Patek, Brann, Frischling, Mueller & Waldbaum, *Proposed Subcommittee Report on Federal Circuit En Banc Review of Good-Faith Belief in Invalidity as a Defense*

to Indirect Infringement, PAT. INFRINGEMENT SUBCOMM., ABA SECT. INTELL. PROP. L., at 13–14 (Sept. 23, 2013) (hereafter "ABA Report"); *see also* Commil's Br. at 52.

These outcomes conflict with the presumption of validity awarded to patents under § 282 and this Court's holding in *Microsoft v. i4i* (2011). As the late Judge Giles Rich, a principal drafter of the 1952 Patent Act, once said:

> [§] 282 creates a presumption that a patent is valid and imposes the burden of proving invalidity on that attacker. That burden is constant and is to convince the court of invalidity by clear and convincing evidence.

Microsoft, 131 S. Ct. at 2243 (quoting *American Hoist & Derrick Co. v. Sowa & Sons*, 725 F.2d 1350, 1360 (Fed. Cir. 1984)).

III. The Federal Circuit's new rule requires courts to develop a new body of law for induced infringement, contrary to this Court's guidance for § 271(b) *in Limelight v. Akamai* (2014).

In *Limelight Networks, Inc. v. Akamai Techs, Inc.*, this Court held that a defendant is not liable for

inducing patent infringement under 35 U.S.C. § 271(b) when no single party has directly infringed the patent under § 271(a). 134 S. Ct. 2111, 2115 (2014). This holding overturned the Federal Circuit's ruling that liability for patent infringement may be imposed "when a defendant carries out some steps constituting a method patent and encourages others to carry out the remaining steps – even if no one would be liable as a direct infringer in such circumstances " *Id.* at 2116.

Had this Court affirmed the Federal Circuit's ruling, the affirmance would have brought about "dramatic changes in the law of infringement," and it would have imposed liability for induced infringement "on greatly enlarged grounds, such as merely advising or encouraging acts that may constitute direct infringement," even when no direct infringement exists. *Akamai Techs, Inc. v. Limelight Networks, Inc.*, 692 F.3d 1301, 1319 (Fed. Cir. 2012) (en banc) (J. Newman, dissenting). Judge Linn also dissented. He, with Judges Prost, Dyk, and O'Malley joining, acknowledged that "[b]roadening the doctrine of inducement, such that no predicate act of direct infringement is required, is a sweeping change to the nation's patent policy that is not for [the Federal Circuit] to make." *Id.* at 1342 (citing this Court's instructions in *Mayo Collaborative Servs. v. Prometheus*, 132 S. Ct. 1289, 1305 (2012), about the

need to "recognize the role of Congress in crafting more finely tailored rules where necessary." *Id.* at 1305.).

In reversing the Federal Circuit, this Court observed that the Federal Circuit's position "would deprive § 271(b) of ascertainable standards." *Limelight*, 134 S. Ct. at 2117. The Federal Circuit "would require courts to develop two parallel bodies of infringement law: one for liability for direct infringement, and one for liability for inducement." *Id.* at 2118. This Court further observed:

> [W]hen Congress wishes to impose liability for inducing activity that does not itself constitute direct infringement, it knows precisely how to do so. The courts should not create liability for inducement of non-infringing conduct where Congress has elected not to extend that concept.

Id.

In this same vein, the Federal Circuit's new rule in this case would also bring about drastic changes in the law of induced infringement. Further and contrary to this Court's guidance in *Limelight*, the Federal Circuit's new rule would require courts to develop an extensive new body of case law on induced infringement. This case law will expand the Federal

Circuit's ruling, and it will help guide defendants to avoid induced infringement liability in newer, more creative ways.

Indeed, under the Federal Circuit's new rule, courts would need to develop case law to answer a number of difficult questions. For example, Judge Reyna in his dissent from the denial of rehearing en banc in *Commil II*, identifies the following questions:

> (a) Is the new rule a question of fact, a question of law, or a question of law with an underlying factual basis?
>
> and
>
> (b) Should the question of good-faith belief of invalidity be tried along with the invalidity issues, or perhaps before any other issues are heard given its determinative effect on the outcome of the case?

Commil II, 737 F.3d 699, 703 (Fed. Cir. 2013) (Reyna, J., dissenting from denial of rehearing en banc) (joined by Rader, C.J., Newman, Lourie, Wallach, JJ.)

Peter Strand of Shook, Hardy & Bacon, L.L.P., identifies two additional questions:

> (c) What evidence is needed to support a good-faith belief of invalidity?
>
> and
>
> (d) What is the burden of proving "a good-faith belief"–clear and convincing evidence?

Peter Strand, *New "Belief" Defense To Induced Infringement: Fixing What Isn't Broken?*, *in* IPQ NEWSL., at 4 (Shook, Hardy & Bacon, L.L.P., Nov. 2013).

The extent to which courts will be required to develop new case law to answer these four evidentiary and procedural questions is disconcerting. Even more troubling are four issues that the ABA's Patent Infringement Subcommittee of the IP Section identified. These issues reinforce the above identified issues as some of the problems arising from the Federal Circuit's ruling:

> (1) *Commil*'s recognition of a good-faith belief of invalidity as a defense cannot be reconciled with the presumption of validity (§ 282) (*see* Sect. II, *supra*);

(2) There is no established precedent for using good-faith belief of invalidity to prove lack of intent to induce;[5]

(3) The majority opinion impermissibly transfers rules governing willfulness determinations to inducement; and

(4) The majority opinion provides no guidance on how to administer a good-faith belief of invalidity defense.

ABA Report at 13–16.

Requiring the courts to answer these questions and no doubt many others is contrary to this Court's guidance in *Limelight v. Akamai* when such answers will be founded on erroneous readings of the patent statutes and this Court's precedents. Congress makes

---

[5] A panel of the Federal Circuit subsequently cited *Commil I* approvingly in *Bose Corp. v. SDI Technologies*, 558 Fed. Appx. 1012, 1022 (Fed. Cir. Mar. 14, 2014) (non-precedential) ("evidence of an accused inducer's good-faith belief of invalidity may negate the requisite intent for induced infringement"). Judge Clevenger's opinion however reversed the district court's grant of summary judgment; the district court had absolved SDI of indirect infringement liability. He held that a fact issue existed regarding the date when SDI began to rely on its opinion of counsel that the asserted patent was invalid. *Id.* at 1023; *see also* Richard M. Marsh, Jr., *The Aftermath of Akamai: Induced Infringement and Opinions of Counsel*, *in* LANDSLIDE, at 4–5 (A.B.A. Sect. Intell. Prop. L., 2014).

new laws, not the courts. The Federal Circuit has not respected Congress' role in this case.

CONCLUSION

MUSC FRD asks this Court to vacate the Federal Circuit's opinion in this case, and remand it to the court with instructions to follow this Court's guidance regarding the law of induced infringement and that a subjective belief of invalidity is not a defense to a patent that is presumed valid until clearly and convincingly proven invalid.

Respectfully submitted,

PETER J. CORCORAN, III
Counsel of Record
CORCORAN IP LAW, PLLC
2509 Richmond Road
Suite 380
Texarkana, Texas 75503
peter@corcoranip.com
(903) 701-2481

SAMUEL F. BAXTER
JOHN F. GARVISH, II, PH.D.
MCKOOL SMITH, P.C.
300 Crescent Court
Suite 1500
Dallas, TX 75201
(214) 978-4000
300 W. 6th Street
Suite 1700
Austin, TX 78701
(512) 692-8700

MARK J. GATSCHET, PH.D.
MARK JOHN GATSCHET, PLLC
P.O. Box 27590
Austin, Texas 78755

RICHARD W. KNIGHT
R. W. KNIGHT, P.C.
18619 Crossprairie
San Antonio, Texas 78258

AMICUS CURIAE BRIEF

Supreme Court, U.S.
FILED
JAN 27 2015
OFFICE OF THE CLERK

No. 13-896

IN THE

Supreme Court of the United States

COMMIL USA, LLC,

Petitioner,

v.

CISCO SYSTEMS, INC.,

Respondent.

On Writ of Certiorari to the United States Court of Appeals for the Federal Circuit

BRIEF OF PHARMACEUTICAL RESEARCH AND MANUFACTURERS OF AMERICA AS *AMICUS CURIAE* IN SUPPORT OF PETITIONER

JAMES M. SPEARS
DAVID E. KORN
MELISSA B. KIMMEL
PHARMACEUTICAL RESEARCH AND MANUFACTURERS OF AMERICA
950 F. Street, N.W.
Suite 300
Washington, D.C. 20004
(202) 835-3400

CARTER G. PHILLIPS*
JEFFREY P. KUSHAN
RYAN C. MORRIS
SIDLEY AUSTIN LLP
1501 K Street, N.W.
Washington, D.C. 20005
(202) 736-8000
cphillips@sidley.com

Counsel for Amicus

* Counsel of Record

January 27, 2015

WILSON-EPES PRINTING CO., INC. – (202) 789-0096 – WASHINGTON, D. C. 20002

TABLE OF CONTENTS

TABLE OF AUTHORITIES ii

INTEREST OF *AMICUS CURIAE* AND SUMMARY OF ARGUMENT 1

ARGUMENT 3

I. THE FEDERAL CIRCUIT'S GOOD-FAITH-BELIEF-IN-INVALIDITY DEFENSE TO INDUCEMENT CONTRAVENES THE PATENT ACT 3

II. THE COURT SHOULD AVOID CREATING NEW UNCERTAINTIES FOR THE PHARMACEUTICAL INDUSTRY 7

CONCLUSION 12

TABLE OF AUTHORITIES

CASES Page

AstraZenecaLP v. *Apotex, Inc.*, 633 F.3d 1042 (Fed. Cir. 2010) 11
C.R. Bard, Inc. v. *Advanced Cardiovascular Sys., Inc.*, 911 F.2d 670 (Fed. Cir. 1990) 10
Global-Tech Appliances, Inc. v. *SEB S.A.*, 131 S. Ct. 2060 (2011) 5, 6
Microsoft Corp. v. i4i Ltd. P'ship, 131 S. Ct. 2238 (2011) 3, 5
Moleculon Research Corp. v. *CBS, Inc.*, 793 F.2d 1261 (Fed. Cir. 1986), *abrogatged on other grounds by Egyptian Goddess, Inc.* v. *Swisa, Inc.*, 543 F.3d 665 (Fed. Cir. 2008) 10
Water Techs. Corp. v. *Calco, Ltd.*, 850 F.2d 660 (Fed. Cir. 1988) 10

STATUTES

35 U.S.C. § 271 ..... 3, 5, 10
§ 282 ..... 2, 3, 5, 6

OTHER AUTHORITIES

C. Augustyn et al., Bos. Healthcare Assocs., *Recognizing the Value of Innovation in HIV/AIDS Therapy* (2012), *available at* http://www.phrma.org/sites/default/files/flash/phrma_innovation_value.pdf 9
Merrill, Levin, & Myers, Nat'l Research Council of the Nat'l Acads., *A Patent System for the 21st Century* (2004), *available at* http://www.nap.edu/html/patentsystem/0309089107.pdf 8, 11

TABLE OF AUTHORITIES—continued

Page

PhRMA, *Pharmaceutical Industry Profile 2014* (2014), *available at* http://www.phrma.org/sites/default/files/pdf/2014_PhRMA_PROFILE.pdf 8, 9

Tufts Ctr. for the Study of Drug Dev. & Tufts Sch. of Med., *Briefing: Cost of Developing a New Drug* (2014) *available at* http://csdd.tufts.edu/files/uploads/Tufts_CSDD_briefing_on_RD_cost_study_-_Nov_18,_2014..pdf 8

Vernon et al., *Drug development costs when financial risk is measured using the Fama-French three-factor model*, 19 Health Econ. 1002 (2010), *available at* http://dx.doi.org/10.1002/hec.1538 8

INTEREST OF *AMICUS CURIAE*[1] AND SUMMARY OF ARGUMENT

The Pharmaceutical Research and Manufacturers of America ("PhRMA") is an association dedicated to representing the interests of the Nation's leading pharmaceutical and biotechnology companies. Our members' research and development efforts produce the innovative medicines, treatments, and vaccines that save, prolong, and improve the quality of the lives of countless individuals around the world every day. Over the past decade, our members have secured the FDA's approval of more than 300 new medicines. Such results do not come cheaply. In 2013 alone, PhRMA companies invested roughly $51 billion in discovering and developing new medicines.

PhRMA seeks to protect these significant financial investments by advancing public policies that foster innovation and reward our members' efforts. A large portion of this work focuses on removing obstacles to innovation, including those barriers that may arise in the nation's systems for protecting the intellectual property of our Members, and in particular, the patent system.

One such obstacle is the unpredictability introduced into the patent system by unanticipated and unsupportable interpretations of foundational principles of patent law. In this case, the Federal Circuit has redefined what actions defeat a claim of induced infringement of a valid patent, and has done so by reading into the law concepts that have no foundation

---

[1] Pursuant to Supreme Court Rule 37.6, *amicus* hereby certifies that no counsel for a party authored this brief in whole or in part, and that no one but *amicus* and its counsel contributed financially to the brief's preparation or submission. Both parties have consented to the filing of this brief.

in the Patent Act. This change unfairly and improperly puts at risk valid patents, introducing unwarranted impediments to enforcing these rights in meritorious inventions, and doing so long after our Members have taken the significant risks and made the tremendous investments necessary to discover, develop, clinically test, and bring to market new medicines and treatments to address unmet medical needs.

The Federal Circuit in this case concluded that a good-faith belief in the invalidity of an asserted patent could defeat a claim of induced infringement. This new wholly subjective defense, however, is inconsistent with Congress's express command in the Patent Act that a "patent shall be presumed valid" unless invalidity is established by clear and convincing evidence. 35 U.S.C. § 282(a). The Federal Circuit's new defense would permit a party to actively induce another to directly infringe a patent, and yet escape liability, not by establishing the necessary clear and convincing proof that the patent is invalid, but by merely showing a subjective good-faith belief of invalidity.

The Court should reject this new defense, not only because it contravenes the Patent Act, but also because it could introduce greater uncertainty for patent holders. Increasing the uncertainty that a patent holder can enforce its intellectual property rights harms innovation and could impede the development of new products and new uses of existing products. This is particularly so for the pharmaceutical industry, which requires tremendous costs and resources to bring even one new medicine to market. In order to invest the necessary resources to discover and develop new and innovative medicines, pharmaceutical companies require certainty and predictability with respect to their intellectual property rights, and the

Federal Circuit's new defense to inducement—based solely on the subjective beliefs of market participants—is the antithesis of certainty and predictability.

The Court should rectify the Federal Circuit's new basis for defeating a claim of induced infringement of a valid patent.

ARGUMENT

I. THE FEDERAL CIRCUIT'S GOOD-FAITH-BELIEF-IN-INVALIDITY DEFENSE TO INDUCEMENT CONTRAVENES THE PATENT ACT.

The Federal Circuit's conclusion that a good-faith belief in invalidity can defeat a claim of induced infringement is flatly inconsistent with the statutory language and design of the Patent Act.

a. Section 271(b) of the Patent Act declares inducement to be a form of infringement, providing that "[w]hoever actively induces infringement of a patent shall be liable as an infringer." 35 U.S.C. § 271(b). Section 282, in turn, defines the available defenses "in any action involving the ... infringement of a patent," including the two distinct defenses of noninfringement and invalidity. *Id.* § 282(b).

Section 282, however, also broadly declares that a "patent shall be presumed valid." *Id.* § 282(a). To overcome this ongoing presumption, this section puts the burden on the accused infringer to establish by clear and convincing proof that the patent is invalid. *Id.* ("The burden of establishing invalidity of a patent or any claim thereof shall rest on the party asserting such invalidity."); *Microsoft Corp. v. i4i Ltd. P'ship*, 131 S. Ct. 2238, 2242 (2011) (holding that "§ 282 re-

quires an invalidity defense to be proved by clear and convincing evidence").

The Federal Circuit's good-faith-belief-in-invalidity defense not only improperly conflates the distinct questions of whether there is infringement (i.e., whether the party performed actions which the statute defines to be infringing) and whether the patent is invalid, which alone contravenes the statutory design of the Patent Act, but it also effectively vitiates the statutorily mandated presumption of patent validity. The new defense essentially permits a party to knowingly induce infringement of a patent but escape liability, not by establishing by clear and convincing evidence that a patent is invalid, but by having a "good faith"—though ultimately incorrect—belief of invalidity. The inequity of this standard is remarkable—it absolves an acknowledged infringer from liability even when, as in this case, the putative invalidity of the patent is rejected by the jury. See Pet. App. 4a. Such a defense contravenes Congress's express command.

b. The Federal Circuit adopted this erroneous defense because it had previously permitted a good-faith belief of noninfringement to negate the intent necessary for inducement and because it saw "no principled distinction between a good-faith belief of invalidity and a good-faith belief of noninfringement." Pet. App. 11a. This reasoning does not withstand scrutiny. The principled distinction between noninfringement and invalidity is § 282, which explicitly establishes a presumption of patent validity, but not a presumption of noninfringement. Congress commanded parties to proceed under a presumption that each patent is valid unless clear and convincing evidence of invalidity overcomes that pre-

sumption. *Microsoft*, 131 S. Ct. at 2242. There is no corresponding presumption for noninfringement.[2]

The Federal Circuit also reasoned that "[i]t is axiomatic that one cannot infringe an invalid patent," and thus "a good-faith belief that a patent is not valid.... may negate the specific intent to encourage another's infringement." Pet. App. 11a–12a. But this erroneously confuses ultimate liability for infringement with the question whether the alleged infringer has performed actions that, under the statute, constitute induced infringement. In particular, § 271(b) defines induced infringement by reference to the direct infringement defined in § 271(a), declaring that one who actively induces another to directly infringe under § 271(a) shall be liable as an infringer. See 35 U.S.C. § 271(b). Section 271(a), in turn, provides that "whoever without authority makes, uses, offers to sell, or sells any patented invention ... during the term of the patent therefor, infringes the patent." *Id.* § 271(a); see *Global-Tech Appliances, Inc.* v. *SEB S.A.*, 131 S. Ct. 2060, 2065 & n.2 (2011) ("Direct infringement has long been understood to require no more than the unauthorized use of a patented invention."). That basic definition of direct infringement in § 271(a) does not involve a determination of validity or invalidity, which the Patent Act handles separately under § 282 as a defense to ultimate liability for infringement. 35 U.S.C. § 282(b).

---

[2] PhRMA takes no position on whether a good-faith belief in noninfringement can defeat a claim of inducement. The United States has indicated that this issue is not presently before the Court. *See* Br. for the United States as *Amicus Curiae* in Support of Certiorari at 13 (stating that "the soundness of [the] premise" that a good-faith belief in noninfringement is a defense "is not squarely at issue here").

In other words, whether someone is ultimately held liable for "infringement" after the resolution of any defenses is cast in the statute as a distinct inquiry from the question whether that conduct constitutes induced infringement under § 271(b). Section 271(b) requires only that someone "actively induces" another to perform certain actions—to make, use, offer to sell, or sell a patented invention without authority during the term of the patent. Whether a defense of "invalidity" precludes ultimate liability is a separate issue from whether there is "noninfringement." See *id.* § 282(b) (defining "noninfringement" and "invalidity" as separate defenses).

In *Global-Tech*, the Court recognized that the infringement referenced in Section 271(b) is the direct infringement defined by § 271(a), "*i.e.*, the making, using, offering to sell, selling, or importing of a patented invention." 131 S. Ct. at 2065; see also *id.* at 2065 n.2. And this is critical to understanding the Court's *Global-Tech* decision. In holding "that induced infringement under § 271(b) requires knowledge that induced acts constitute patent infringement," *id.* at 2068, the Court was not suggesting that a patent holder had to prove knowledge that an accused infringer would actually be held liable for patent infringement. Rather, the Court held—consistent with the text and structure of § 271—that induced infringement requires knowledge that the induced acts would constitute infringement pursuant to § 271(a).[3]

---

[3] The Federal Circuit stated that it was not creating a defense to inducement based on a good-faith belief of invalidity, but rather was merely allowing evidence that could be "considered by the fact-finder in determining whether an accused party knew 'that the induced acts constituted patent infringement.'" Pet. App. 13a. As the United States has explained, it is difficult to

The Federal Circuit's determination that a good-faith belief in invalidity can defeat an induced infringement claim under § 271(b) has no basis in the Patent Act and contravenes its text and structure.

II. THE COURT SHOULD AVOID CREATING NEW UNCERTAINTIES FOR THE PHARMACEUTICAL INDUSTRY.

The Court should reject a rule, like the Federal Circuit's new good-faith-belief-in-invalidity defense, that could create uncertainty for patent holders, particularly those within the pharmaceutical industry. Increasing the uncertainty that patent holders can enforce their intellectual property rights harms innovation and could ultimately deter the development of new, often life-saving, products.

a. Certainty with respect to enforcement of intellectual property rights is critical to innovation. In many industries—with pharmaceutical companies being chief among them—innovations result only from enormous investments into research and development. On average, an innovative new drug requires 10 to 15 years to develop and costs in excess of $2.5 billion when factoring in the unavoidable reality that

---

see how, under the Federal Circuit's reasoning, an accused infringer could ever have a good-faith belief in invalidity and yet still intend to induce infringement. *See* Br. for the United States as *Amicus Curiae* in Support of Certiorari at 11 n.2. More importantly, as explained above, the evidence the Federal Circuit would permit does not address the actual intent at issue in a claim for inducement. A claim for inducement requires a showing that the accused infringer actively induced direct infringement as defined by § 271(a), not that the accused infringer actively induced conduct that would ultimately result in liability. The evidence permitted by the Federal Circuit only goes to that latter issue, which is irrelevant. But even that evidence is improper. Evidence of a good-faith belief in invalidity does not establish invalidity or any other defense in § 282(b).

many investments do not result in marketable products. PhRMA, *Pharmaceutical Industry Profile 2014*, at 45 (2014), *available at* http://www.phrma.org/sites/default/files/pdf/2014_PhRMA_PROFILE.pdf ("Industry Profile"); Tufts Ctr. for the Study of Drug Dev. & Tufts Sch. of Med., *Briefing: Cost of Developing a New Drug* 5, 18 (2014) *available at* http://csdd.tufts.edu/files/uploads/Tufts_CSDD_briefing_on_RD_cost_study_-_Nov_18,_2014..pdf ("CSDD Briefing"). And in this area, the likelihood of commercial success for any individual new initiative is small. Tens of thousands of compounds may be screened early in development, but only one ultimately may receive approval. Industry Profile at 45. Most compounds never even reach the clinical trial phase of development, and of those that do, less than twelve percent are approved by FDA. *Id.* at 45–47; CSDD Briefing at 17.

Even with regulatory approval, only two in ten medicines ever produce revenues that match or exceed the average cost of research and development. See Industry Profile at "Key Facts"; Vernon et al., *Drug development costs when financial risk is measured using the Fama-French three-factor model*, 19 Health Econ. 1002 (2010), http://dx.doi.org/10.1002/hec.1538.

A company's decision to make these costly investments hinges on the availability of strong intellectual property rights. Given these realities, companies must have certainty and predictability with respect to those intellectual property rights. A good-faith-belief-in-invalidity defense is the antithesis of the certainty and predictably necessary for the pharmaceutical industry in particular and innovation in general. See Merrill, Levin, & Myers, Nat'l Research Council of the Nat'l Acads., *A Patent System for the 21st Century*

117 (2004) ("Among the factors that increase the cost and decrease the predictability of patent infringement litigation are issues unique to U.S. patent jurisprudence that depend on the assessment of a party's state of mind at the time of the alleged infringement or the time of patent application."), *available at* http://www.nap.edu/html/patentsystem/03090 89107.pdf. Such a rule does not rest on definite standards, but rather on the subjective views of various market participants.

b. The uncertainty a good-faith-belief-in-invalidity defense might engender could be particularly problematic for patent claims covering methods for using particular pharmaceuticals (so-called, method-of-use claims). Method-of-use claims often result from ongoing innovation for particular pharmaceuticals or other known or natural compounds. One important and beneficial way pharmaceutical companies innovate is by improving existing products. Some of the most important medical advances involve improvements to existing medicines, such as improved delivery systems or dosage forms, or discovery of new uses of approved products. See Industry Profile at 48. In 2012 alone, PhRMA members spent an estimated $6.7 billion on Phase IV clinical trials involving research on already approved products. *Id.* at 71 tbl.4. When successful, this research has produced innovations that can improve or extend the lives of patients. For example, progress in the battle against HIV and AIDS followed this path and depended on constant learning about the optimal use of HIV drugs following FDA approval, including the development of a one-pill-a-day treatment in 2006. C. Augustyn et al., Bos. Healthcare Assocs., *Recognizing the Value of Innovation in HIV/AIDS Therapy* 7-8 (2012), *available at* http://www.phrma.org/sites/default/files/flash/phrma_

innovation_value.pdf. Moreover, this ongoing research may result in uses of a pharmaceutical in entirely different therapeutic areas or patient populations, or the discovery that a drug is effective at treating conditions for which no effective therapy was previously available.

New method-of-use patent claims often issue to protect the results of this ongoing research and innovation, and the need for certainty and predictability is just as important for these patents as for all intellectual property in this area. However, the Federal Circuit's new defense to induced infringement may be especially problematic for method-of-use claims. For these claims, direct infringement would occur when the drug is prescribed and administered. But because manufacturers typically do not prescribe or administer a drug, the focus for enforcement of method-of-use claims is inducement; it has long been the case that a manufacturer is liable for inducing infringement of a method-of-use claim if the instructions for using the accused article teach or otherwise induce the user to practice the infringing method. See, e.g., *C.R. Bard, Inc.* v. *Advanced Cardiovascular Sys., Inc.*, 911 F.2d 670, 675 (Fed. Cir. 1990) (finding infringement when defendant "provid[ed] detailed instructions and other literature on how to use [the device] in a manner which would infringe"); *Water Techs. Corp.* v. *Calco, Ltd.*, 850 F.2d 660, 668 (Fed. Cir. 1988) (finding inducement based on "consumer use instructions"); *Moleculon Research Corp.* v. *CBS, Inc.*, 793 F.2d 1261, 1272 (Fed. Cir. 1986) (infringement based on "dissemination of an instruction sheet teaching the [patented] method"), *abrogated on other grounds by Egyptian Goddess, Inc.* v. *Swisa, Inc.*, 543 F.3d 665 (Fed. Cir. 2008) (en banc); see also 35 U.S.C. § 271(e)(2) (filing certain applications is an act of in-

fringement "for a drug ... the use of which is claimed in a patent").

For pharmaceuticals, the "instructions" disseminated with a marketed drug product include the FDA-approved labeling. Hence, under a standard inducement test, a drug manufacturer will be liable for infringement when the drug's labeling instructs the prescribing physician or patient to use the product in a way that would infringe a patent claim. See, *e.g.*, *AstraZeneca LP* v. *Apotex, Inc.*, 633 F.3d 1042, 1060 (Fed. Cir. 2010) ("The pertinent question is whether the proposed label instructs users to perform the patented method.").

The Federal Circuit's subjective good-faith-belief-in-invalidity defense would create tremendous uncertainty concerning the enforcement of method-of-use claims, jeopardizing the important areas of research and innovation that they protect. Instead of permitting an entirely objective inquiry into labeling or other instructions for purposes of establishing inducement, the Federal Circuit would create uncertainty by permitting inquiries into subjective beliefs about the validity of a company's intellectual property. This will only decrease the "predictability of patent dispute outcomes" and increase "the cost of litigation." Merrill, Levin, & Myers, *supra*, at 117–18 (removing inquires into subjective beliefs "would increase predictability in patent dispute outcomes and reduce the cost of litigation."). Such a rule will in turn harm innovation and disincentivize efforts to discover and produce certain types of potentially important and life-saving medicines.

CONCLUSION

For the foregoing reasons, the Court should reverse the Federal Circuit's decision with respect to inducement.

Respectfully submitted,

JAMES M. SPEARS
DAVID E. KORN
MELISSA B. KIMMEL
PHARMACEUTICAL RESEARCH AND MANUFACTURERS OF AMERICA
950 F. Street, N.W
Suite 300
Washington, D.C. 20004
(202) 835-3400

CARTER G. PHILLIPS*
JEFFREY P. KUSHAN
RYAN C. MORRIS
SIDLEY AUSTIN LLP
1501 K Street, N.W.
Washington, D.C. 20005
(202) 736-8000
cphillips@sidley.com

Counsel for Amicus

* Counsel of Record

January 27, 2015

AMICUS CURIAE BRIEF

No. 13-896

IN THE

Supreme Court of the United States

COMMIL USA, LLC,

Petitioner,

v.

CISCO SYSTEMS, INC.,

Respondent.

ON WRIT OF CERTIORARI
TO THE UNITED STATES COURT OF APPEALS
FOR THE FEDERAL CIRCUIT

BRIEF OF PUBLIC KNOWLEDGE, THE R STREET INSTITUTE, THE AMERICAN LIBRARY ASSOCIATION, THE ASSOCIATION OF RESEARCH LIBRARIES, THE ASSOCIATION OF COLLEGE AND RESEARCH LIBRARIES, AND THE CENTER FOR DEMOCRACY AND TECHNOLOGY AS *AMICI CURIAE* IN SUPPORT OF RESPONDENT

PHILLIP R. MALONE
JEF PEARLMAN
JUELSGAARD INTELLECTUAL
PROPERTY & INNOVATION CLINIC
MILLS LEGAL CLINIC
STANFORD LAW SCHOOL
559 Nathan Abbott Way
Stanford, CA 94305
(650) 725-6369
jipic@law.stanford.edu

CHARLES DUAN
Counsel of Record
PUBLIC KNOWLEDGE
1818 N Street NW, Suite 410
Washington, DC 20036
(202) 861-0020
cduan@publicknowledge.org
Counsel for Public Knowledge

(Listing of counsel continued on inside cover)

(Listing of counsel, continued)

KRISTA COX
ASSOCIATION OF RESEARCH LIBRARIES
21 Dupont Circle NW, #800
Washington, DC 20036
(202) 296-2296
krista@arl.org

Counsel for the American Library Association, Association of Research Libraries, and Association of College and Research Libraries

MICHAEL GODWIN
R STREET INSTITUTE
1050 17th Street NW, Suite 1150
Washington, DC 20036
(202) 525-5717
mgodwin@rstreet.org

Counsel for the R Street Institute

ERIK STALLMAN
CENTER FOR DEMOCRACY AND TECHNOLOGY
1634 I Street NW, #1100
Washington, DC 20006
(202) 637-9800
estallman@cdt.org

Counsel for the Center for Democracy and Technology

TABLE OF CONTENTS

TABLE OF AUTHORITIES ii

INTEREST OF *AMICI CURIAE* 1

SUMMARY OF ARGUMENT 3

ARGUMENT 5

I. Because Copyright and Patent Share a Historic Kinship, This Court Must Consider This Case's Implications for Copyright Law 5

II. Copyright Inducement Requires Knowledge that the Induced Acts Are Infringing, Not Mere Notice of Infringement 8

A. *Grokster* and its Progeny Require Intent to Commit Culpable Acts to Induce Infringement 9

B. The Intent Requirement Follows from the Constitutional Mandate for Balanced Copyright Law and Patent Law 11

III. Commil's Proposed Standard, If Applied to Copyright Inducement, Would Have Negative Practical Consequences 13

A. The "Mere Notice of Infringement" Standard Is Incompatible with Other Forms of Secondary Copyright Liability 13

B. Automatic Inducement Liability Upon Mere Notice of Infringement Would Stifle Innovation 16

CONCLUSION 22

TABLE OF AUTHORITIES

CASES

Alice Corp. Pty. Ltd. v. CLS Bank Int'l,
134 S. Ct. 2347 (2014) 1

Apple Inc. v. Pystar Corp.,
658 F.3d 1150 (9th Cir. 2011) 6

Bonito Boats, Inc. v. Thunder Craft Boats, Inc.,
489 U.S. 141 (1989) 5, 12

Campbell v. Acuff-Rose Music, Inc.,
510 U.S. 569 (1994) 6

Columbia Pictures Indus., Inc. v. Fung,
710 F.3d 1020 (9th Cir. 2013) 10

DSU Med. Corp. v. JMS Co.,
471 F.3d 1293 (Fed. Cir. 2006) 7

Faulkner v. Nat'l Geographic Soc'y,
211 F. Supp. 2d 450 (S.D.N.Y. 2002) 14

Fox Film Corp. v. Doyal,
286 U.S. 123 (1932) 11

Gershwin Publ'g Corp.
v. Columbia Artists Mgmt., Inc.,
443 F.2d 1159 (2d Cir. 1971) 15

Global-Tech Appliances, Inc. v. SEB S.A.,
131 S. Ct. 2060 (2011) 7

Harper & Row Publishers, Inc., v. Nation Enters.,
471 U.S. 539 (1985) 6, 11

Kirtsaeng v. John Wiley & Sons, Inc.,
133 S. Ct. 1351 (2013) 1

KSR Int'l Co. v. Teleflex Inc.,
550 U.S. 398 (2007) 19

LifeScan Scot., Ltd. v. Shasta Techs., LLC,
734 F.3d 1361 (Fed. Cir. 2013) 6

Metro-Goldwyn-Mayer Studios Inc.
v. Grokster, Ltd.,
545 U.S. 913 (2005) 7–17, 19–21

Nautilus, Inc. v. Biosig Instruments, Inc.,
134 S. Ct. 2120 (2014) 1

New York Trust Co. v. Eisner,
256 U.S. 345 (1921) 21

Octane Fitness, LLC
v. Icon Health & Fitness, Inc.,
134 S. Ct. 1749 (2014) 1

Perfect 10, Inc. v. Amazon.com, Inc.,
508 F.3d 1146 (9th Cir. 2007) 10

Perfect 10, Inc. v. Google, Inc.,
653 F.3d 976 (9th Cir. 2011) 7

Perfect 10, Inc. v. Visa Int'l Serv. Ass'n,
494 F. 3d 788 (9th Cir. 2007) 10

Promega Corp. v. Life Techs. Corp.,
773 F.3d 1338 (Fed. Cir. 2014) 7

Quanta Computer, Inc. v. LG Elecs. Corp.,
553 U.S. 617 (2008) 6

Sony Corp. of Am. v. Universal City Studios, Inc.,
464 U.S. 417 (1984) 5–8, 11–19

Syncom Sys., Inc. v. Novelis Corp.,
581 F.3d 431 (6th Cir. 2009) 7

Therasense, Inc. v. Becton, Dickinson & Co.,
649 F.3d 1276 (Fed. Cir. 2011) 7

United States v. Paramount Pictures, Inc.,
334 U.S. 131 (1948) 6, 11

Viacom Int'l, Inc. v. Youtube, Inc.,
676 F.3d 19 (2d Cir. 2012) 10

Wheaton v. Peters,
33 U.S. (8 Pet.) 591 (1834) 6

CONSTITUTIONAL PROVISIONS

U.S. Const. art. I, § 8, cl. 8 . . . . . 5, 11

STATUTES

17 U.S.C. § 109(a) (2012) 6

17 U.S.C. § 117(a) 19

——— §§ 502(a), 504(c) 13

——— § 512(c)(1)(b) 10

35 U.S.C. § 271(b) (2012) 7

——— § 271(c) 7

OTHER SOURCES

Brief of Amici Curiae Emerging Technology Companies, *Metro-Goldwyn-Mayer Studios Inc. v. Grokster, Ltd.*, 545 U.S. 913 (Mar. 1, 2005) (No. 04-480), http://www.copyright.gov/docs/mgm/emerging.pdf 20

Brief of Intel Corp. as Amicus Curiae, *Metro-Goldwyn-Mayer Studios Inc. v. Grokster, Ltd.*, 545 U.S. 913 (Mar. 1, 2005) (No. 04-480), *available at* https://w2.eff.org/IP/P2P/MGM_v_Grokster/20050301_intel.pdf 19–20

Michael A. Carrier, *Innovation for the 21st Century: Harnessing the Power of Intellectual Property and Antitrust Law* (2009) 18, 20

Veronica Corsaro, *From Betamax to YouTube: How* Sony Corporation of America v. Universal City Studios, Inc. *Could Still Be a Standard for New Technology*, 64 Fed. Comm. L.J. 449 (2012), *available at* http://www.repository.

law.indiana.edu/cgi/viewcontent.cgi?article=1620&context=fclj 19

Jane C. Ginsburg & Sam Ricketson, *Inducers and Authorisers: A Comparison of the US Supreme Court's* Grokster *decision and the Australian Federal Court's* KaZaa *ruling*, 11 Media & Arts L. Rev. 1 (2006) 12

Aljean Harmetz, *Big Gains for Video Cassettes*, N.Y. Times, Aug. 21, 1985, C13 17

IFPI Digital Music Report 2014: Lighting Up New Markets (2014), http://www.ifpi.org/downloads/Digital-Music-Report-2014.pdf 18

Mark A. Lemley & R. Anthony Reese, *Reducing Digital Copyright Infringement Without Restricting Innovation*, 56 Stan. L. Rev. 1345 (2004) . . . 18–19

Lawrence Lessig, *Free Culture* (2004) 20

Jessica Litman, *Revising Copyright Law for the Information Age*, 75 Or. L. Rev. 19 (1996) 11

Declan McCullagh, *Senate Bill Would Ban P2P Networks*, CNet News (June 23, 2004), http://news.cnet.com/Senate+bill+bans+P2P+networks/2100-1027_3-5244796.html 18

Melville B. Nimmer & David Nimmer, *Nimmer on Copyright* (2014) 14

Maureen O'Rourke, *Toward a Doctrine of Fair Use in Patent Law*, 100 Colum. L. Rev. 1177 (2000) 6

Dotan Oliar, *Making Sense of the Intellectual Property Clause*, 84 Geo. L.J. 1771 (2006) 5

Simone A. Rose, *On Purple Pills, Stem Cells, and Other Market Failures: A Case for a Limited Compulsory Licensing Scheme for Patent Property*, 48 Howard L.J. 579 (2005) 7

RPX Corp., Registration Statement (Form S-1) (Sept. 2, 2011), *available at* http://www.sec.gov/Archives/edgar/data/1509432/000119312511012087/ds1.htm 20

S. 2560, 108th Cong. (2004) 18

Lori Widzinski, *"Step Away from the Machine": A Look at Our Collective Past*, 58 Libr. Trends 358 (2010), *available at* https://ubir.buffalo.edu/xmlui/bitstream/handle/10477/2029/58.3.widzinski.pdf . . 17

INTEREST OF *AMICI CURIAE*

The *amici curiae* on this brief are a diverse group of organizations spanning multiple perspectives and viewpoints. All of the groups share a common interest in a balanced copyright system, calibrated to "promote the Progress of Science and the useful Arts," as the United States Constitution directs.[1]

Public Knowledge is a non-profit organization that is dedicated to preserving the openness of the Internet and the public's access to knowledge, promoting creativity through balanced intellectual property rights, and upholding and protecting the rights of consumers to use innovative technology lawfully. As part of this mission, Public Knowledge advocates on behalf of the public interest for balanced patent and copyright systems, particularly with respect to new and emerging technologies.

Public Knowledge has previously served as *amicus* in key patent and copyright cases. *E.g.*, *Alice Corp. Pty. Ltd. v. CLS Bank Int'l*, 134 S. Ct. 2347 (2014); *Nautilus, Inc. v. Biosig Instruments, Inc.*, 134 S. Ct. 2120 (2014); *Octane Fitness, LLC v. Icon Health & Fitness, Inc.*, 134 S. Ct. 1749 (2014); *Kirtsaeng v. John Wiley & Sons, Inc.*, 133 S. Ct. 1351 (2013).

The R Street Institute is a non-profit, non-partisan public-policy research organization. R Street's mission

[1]Pursuant to Supreme Court Rule 37(3)(a), all parties received appropriate notice of and consented to the filing of this brief. Pursuant to Rule 37(6), no counsel for a party authored this brief in whole or in part, and no counsel or party made a monetary contribution intended to fund the preparation or submission of the brief. No person or entity, other than *amici*, their members, or their counsel, made a monetary contribution to the preparation or submission of this brief.

is to engage in policy research and educational outreach that promotes free markets, as well as limited yet effective government, including properly calibrated legal and regulatory frameworks that support Internet economic growth and individual liberty. R Street's particular focus on Internet law and policy is one of offering research and analysis that show the advantages of a more market-oriented society and of more effective, more efficient laws and regulations that protect freedom of expression and privacy.

The American Library Association ("ALA") is a non-profit professional organization of more than 60,000 librarians dedicated to providing and improving library services and promoting the public interest in a free and open information society. The Association of College and Research Libraries, the largest division of the ALA, is a professional association of academic and research librarians. The Association of Research Libraries ("ARL") is a nonprofit organization of 125 research libraries in North America, including university, public, government and national libraries. Collectively, these three associations represent over 100,000 libraries in the United States employing over 350,000 librarians and other personnel.

The Center for Democracy and Technology ("CDT") is a non-profit public interest and Internet policy organization. CDT represents the public's interest in an open, innovative and decentralized Internet, reflecting constitutional and democratic values of free expression, privacy, and individual liberty. CDT has participated in a broad range of cases and regulatory proceedings applying copyright law to the Internet and other emerging technologies.

SUMMARY OF ARGUMENT

Inducement of infringement, the doctrine central to this case, is not unique to patent law: it is found in copyright as well. The two systems, copyright and patent, share a "historic kinship," deriving from their shared purpose, defined by the Constitution, "to promote the Progress of Science and the useful Arts." And their respective doctrines of inducement are intertwined as well, with inducement of copyright infringement originating from an analogy to patent law.

In view of this close relationship, it behooves this Court, as it considers the law of patent inducement, to ask how that doctrine has been applied in the copyright context. The answer is clear: copyright inducement requires a showing of culpable conduct demonstrating an intent to induce acts known to be infringing. Mere knowledge or notice of possible infringement does not suffice to prove inducement.

Such a clear statement of the intent requirement for proving copyright inducement should apply correspondingly to the patent context—indeed the Court has drawn such an analogy in the past. Yet petitioner Commil takes a far-reaching position beyond the original question presented, contending for the first time that inducement liability should attach upon mere notice of possible infringement. That view has been expressly disfavored in copyright, and the Court should disfavor it in patent as well.

Copyright law mandates this particular level of intent and disfavors Commil's view for at least three reasons.

First, the intent requirement is mandated by the Constitution. Copyrights, to promote progress, must be care-

fully cabined so as not to reach beyond the public interest. In particular, future technological innovation must be balanced against protection of existing rights, and the intent level for inducement strongly affects that balance. Thus, this Court concluded that the balance would be struck only if inducement liability required a showing of "purposeful, culpable expression and conduct."

Second, a lower intent requirement cannot be squared with other secondary liability doctrines of copyright. Under current copyright law, a distributor of products that might be used for infringement may enjoy a safe harbor from contributory liability if the products have "substantial noninfringing uses." Similarly, one may not be held vicariously liable for infringement if one lacks a "right and ability to supervise" a direct infringer's actions. These exceptions to secondary liability might be rendered ineffectual, if inducement liability could attach upon mere notice of a single instance of direct infringement.

Third, the intent requirement ensures the continued progress of technological innovation. If inducement liability could arise merely upon receipt of a letter from an intellectual property right holder—as Commil desires—then technologists and companies would face such a risk of being inundated with inducement liability demands that they might be dissuaded from introducing new products and services to market.

It certainly would be a mistake to draw the rules of copyright inducement in ways that would shut out progress and innovation. It would be a mistake to do so in patent law as well. The Court should reject Commil's proposals to weaken the laws of inducement liability, and accordingly affirm the Court of Appeals.

ARGUMENT

I. BECAUSE COPYRIGHT AND PATENT SHARE A HISTORIC KINSHIP, THIS COURT MUST CONSIDER THIS CASE'S IMPLICATIONS FOR COPYRIGHT LAW

Though the present case deals exclusively with patent law, this Court must consider implications with respect to copyright law as well. Copyright and patent are closely analogous in many respects, as this Court and others have frequently recognized, and decisions in one field of jurisprudence are influentially cited in the other.

Copyright and patent law share a "historic kinship." *Sony Corp. of Am. v. Universal City Studios, Inc.*, 464 U.S. 417, 440 (1984). That kinship arises from their common foundation in the United States Constitution, which endows Congress with the power "to promote the Progress of Science and the useful Arts, by securing for limited Times to Authors and Inventors the exclusive Right to their respective Writings and Discoveries." U.S. Const. art. I, § 8, cl. 8; *see* Dotan Oliar, *Making Sense of the Intellectual Property Clause*, 84 Geo. L.J. 1771, 1816 (2006) (explaining that the clause "was intended to limit Congress's intellectual property power").

This provision mandates, identically for both fields of law, a balance between the holders of those exclusive rights and the public interest in free competition and the public domain, as observed in numerous decisions of this Court.[2] "The copyright law, like the patent statutes,

---

[2]For patent cases, see, for example, *Bonito Boats, Inc. v. Thunder Craft Boats, Inc.*, 489 U.S. 141, 146 (1989) ("From their inception, the federal patent laws have embodied a careful balance . . . ."). For copy-

makes reward to the owner a secondary consideration," the primary consideration being "the general benefits derived by the public from the labors of authors." *United States v. Paramount Pictures, Inc.*, 334 U.S. 131, 158 (1948); *see also Wheaton v. Peters*, 33 U.S. (8 Pet.) 591, 657 (1834) ("In what respect does the right of an author differ from that of an individual who has invented a most useful and valuable machine?").

The kinship in origin has led to kinship in doctrine. For example, the doctrine of copyright misuse is "derived from the long-standing existence of such a defense in patent litigation." *See, e.g., Apple Inc. v. Pystar Corp.*, 658 F.3d 1150, 1157 (9th Cir. 2011). Similarly, the copyright first sale doctrine, which entitles an owner of a copy of a work "to sell or otherwise dispose of the possession of that copy," precisely mirrors the patent doctrine of exhaustion. 17 U.S.C. § 109(a) (2012) (copyright first sale); *see Quanta Computer, Inc. v. LG Elecs. Corp.*, 553 U.S. 617, 625 (2008) (patent exhaustion); *LifeScan Scot., Ltd. v. Shasta Techs., LLC*, 734 F.3d 1361, 1376 (Fed. Cir. 2013) (noting the "common policies underlying patent exhaustion and the first sale doctrine"). Commentators have similarly latched onto the "shared theoretical underpinnings" of copyright and patent to recommend sharing of doctrines. Maureen O'Rourke, *Toward a Doctrine of Fair Use in Patent Law*, 100 Colum. L. Rev. 1177, 1181

---

right cases, see, for example, *Sony*, 464 U.S. at 429 (describing the "difficult balance between the interests of authors and inventors . . . on the one hand, and society's competing interest in the free flow of ideas, information, and commerce on the other hand"); *Harper & Row Publishers, Inc., v. Nation Enters.*, 471 U.S. 539, 545–46 (1985); *see also Campbell v. Acuff-Rose Music, Inc.*, 510 U.S. 569, 575–76 (1994) (noting "the inherent tension in the need simultaneously to protect copyrighted material and to allow others to build upon it").

(2000); *see also* Simone A. Rose, *On Purple Pills, Stem Cells, and Other Market Failures: A Case for a Limited Compulsory Licensing Scheme for Patent Property*, 48 Howard L.J. 579, 622 (2005) (recommending a patent compulsory licensing system modeled on a similar copyright system).

And, most relevant here, doctrines of indirect infringement are directly shared between copyright and patent law. The *Sony* rule that "sale of a 'staple article or commodity of commerce suitable for substantial noninfringing use' is not contributory infringement" for copyright purposes is drawn directly from the Patent Act. *Sony*, 464 U.S. at 440 (quoting 35 U.S.C. § 271(c) (2012)). "*Sony* took the staple-article doctrine of patent law as a model for its copyright safe-harbor rule." *Metro-Goldwyn-Mayer Studios Inc. v. Grokster, Ltd.*, 545 U.S. 913, 936 (2005). Similarly, this Court found the patent inducement rule of 35 U.S.C. § 271(b) "a sensible one for copyright," explicitly mirroring that doctrine into copyright law in *Grokster*. *See id.* at 936–37; *see also Global-Tech Appliances, Inc. v. SEB S.A.*, 131 S. Ct. 2060, 2066–67, 2070 (2011) (citing *Grokster*).

Other courts have followed suit. Patent cases frequently rely on copyright doctrine. *See, e.g., Promega Corp. v. Life Techs. Corp.*, 773 F.3d 1338, 1358–59 & n.2 (Fed. Cir. 2014); *Therasense, Inc. v. Becton, Dickinson & Co.*, 649 F.3d 1276, 1295 (Fed. Cir. 2011); *DSU Med. Corp. v. JMS Co.*, 471 F.3d 1293, 1305–06 (Fed. Cir. 2006). Copyright cases frequently rely on patent doctrine as well. *See, e.g., Perfect 10, Inc. v. Google, Inc.*, 653 F.3d 976, 979–80 (9th Cir. 2011); *Syncom Sys., Inc. v. Novelis Corp.*, 581 F.3d 431, 436 n.2 (6th Cir. 2009).

Certainly copyright and patent law "are not identical twins," *Sony*, 464 U.S. at 439 n.20, but decisions in one field will likely affect the other. This is especially so with respect to inducement doctrine, which copyright law directly adapted from patents. In future copyright cases, courts and parties will cite any decision resulting from the present case—indeed, Commil and the government already cite a copyright decision, *Grokster*, in this patent case. *See* Pet'r Br. 35, Jan. 20, 2015; Gov't Br. 33, Jan. 27, 2015 (noting that "principles of secondary liability serve an analogous function" between patent and copyright). Thus, as this Court decides the present case on inducement of patent infringement, it must remain mindful of the effects its decision will have on copyright law.

II. Copyright Inducement Requires Knowledge that the Induced Acts Are Infringing, Not Mere Notice of Infringement

While the question presented deals specifically with the relevance of a good faith belief in invalidity, Commil and the government surprisingly broaden their positions to argue that no good faith belief *at all* is relevant to the intent requirement of inducement. *See* Pet'r Br. 21; Gov't Br. 9. Commil all but calls for elimination of the scienter requirement entirely, such that the unilateral act of the patentee in notifying a party of a patent can give rise to inducement liability. *See* Pet'r Br. 16.

Commil's position is thus irreconcilable with the clear standard for copyright inducement, namely that one must display culpable intent to cause acts of infringement, and that mere notice of infringement is not sufficient. This scienter level is dictated by the very constitutional pro-

vision that enables copyrights and patents to exist. The strict test for copyright inducement sets the backdrop for assessing the parallel test in patent law.

A. *Grokster* and its Progeny Require Intent to Commit Culpable Acts to Induce Infringement

Grokster states in no uncertain terms that inducement of infringement requires knowledge of the infringing nature of the induced acts. Liability for inducement may only lie, said this Court, when there is "clear expression or other affirmative steps taken to foster infringement." *Grokster*, 545 U.S. at 937. "The inducement rule," the Court emphasized, "premises liability on *purposeful, culpable* expression and conduct." *Id.* (emphasis added). The Court characterized its inducement rule as based on "rules of fault-based liability derived from the common law," indicating that actual *fault* was a prerequisite. *Id.* at 934–35. Thus, inducement requires a showing of intent including knowledge that the induced acts will actually be acts of infringement.

Indeed, *Grokster* specifically states that a party's having only notice of possible infringement would not suffice to find that party liable for inducement. In seeming anticipation of Commil's arguments to the contrary, the Court said, "mere knowledge of infringing potential or of actual infringing uses would not be enough here to subject a distributor to liability." *Id.* at 937; *cf.* Pet'r Br. 16 ("[O]nce the inducer has knowledge of the patent and its potential relevance . . . the intent requirement is satisfied.").

Similarly, *Grokster* observed that the doctrine of secondary liability generally "limits liability to instances of

more acute fault than the mere understanding that some of one's products will be misused." 545 U.S. at 932–33. *Grokster* thus rejects the view that inducement requires merely "proving that the inducer knew about the patent and was aware of the [rightsholder]'s view that the induced conduct is infringing," Gov't Br. 9.

Subsequent cases have confirmed that inducement of copyright infringement requires intent to cause actual infringement, not mere notice of possible infringement. *Perfect 10, Inc. v. Amazon.com, Inc.*, 508 F.3d 1146, 1170 (9th Cir. 2007) ("*Grokster* tells us that contribution to infringement must be intentional for liability to arise."); *Perfect 10, Inc. v. Visa Int'l Serv. Ass'n*, 494 F. 3d 788, 800–01 (9th Cir. 2007) ("Because Perfect 10 alleges no 'affirmative steps taken to foster infringement' . . , its claim is premised on a fundamental misreading of *Grokster* that would render the concept of 'inducement' virtually meaningless."); *Columbia Pictures Indus., Inc. v. Fung*, 710 F.3d 1020, 1032 (9th Cir. 2013) (observing that an element of the *Grokster* inducement test is "an object of promoting its use to infringe copyright"); *see also Viacom Int'l, Inc. v. Youtube, Inc.*, 676 F.3d 19, 38 (2d Cir. 2012) (suggesting that *Grokster*-level intent might "rise to the level" of a "right and ability to control" under § 512(c)(1)(b)).

Accordingly, in the context of copyright law, inducement of infringement requires a strong showing that the accused inducer intended to bring about acts known to be infringing. Mere knowledge of the possibility of infringement would not suffice to prove inducement. This strict rule of copyright inducement should militate in favor of a strict rule for inducement generally.

B. The Intent Requirement Follows from the Constitutional Mandate for Balanced Copyright Law and Patent Law

The rule that copyright inducement requires proof of intent beyond mere knowledge of possible infringement is grounded in the Constitution. Congress is empowered to grant copyrights and patents only to the extent that the exclusive rights endowed will "promote the Progress of Science and the useful Arts." U.S. Const. art. I, § 8, cl. 8. The intent requirement of *Grokster* derives from principles flowing from this constitutional provision.

This Court has frequently observed that the constitutional provision for patents and copyrights mandates that those intellectual property rights be a "limited grant . . . by which an important public purpose may be achieved," namely "to motivate the creative activity of authors and inventors by provision of a special reward, and to allow the public access to the products of their genius after the limited period of exclusive control has expired." *Sony*, 464 U.S. at 429; *see also Harper & Row Publishers, Inc., v. Nation Enters.*, 471 U.S. 539, 545 (1985) (agreeing that "copyright is intended to increase and not to impede the harvest of knowledge"); *Paramount Pictures, Inc.*, 334 U.S. at 158 ("The sole interest of the United States and the primary object in conferring the monopoly lie in the general benefits derived by the public from the labors of authors." (quoting *Fox Film Corp. v. Doyal*, 286 U.S. 123, 127 (1932))); Jessica Litman, *Revising Copyright Law for the Information Age*, 75 Or. L. Rev. 19, 31 (1996) ("Copyright is said to be a bargain between the public and copyright holders."). This means that intellectual property laws must balance between what may be exclusively

owned and what must be left available to the public; such laws "must determine not only what is protected, but also what is free for all to use." *Bonito Boats, Inc. v. Thunder Craft Boats, Inc.*, 489 U.S. 141, 151 (1989).

Grokster was guided by this principle of balance in devising the intent requirement for inducement of copyright infringement. The Court began by recognizing that the relevant balance was between those who held intellectual property rights and those who made technologies that might or might not infringe such rights. "The more artistic protection is favored, the more technological innovation may be discouraged; the administration of copyright law is an exercise in managing the tradeoff." *Grokster*, 545 U.S. at 928 (citing *Sony*, 464 U.S. at 442). The Court thus remained "mindful of the need to keep from trenching on regular commerce or discouraging the development of technologies with lawful and unlawful potential." *Id.* at 937; *see also* Jane C. Ginsburg & Sam Ricketson, *Inducers and Authorisers: A Comparison of the US Supreme Court's* Grokster *decision and the Australian Federal Court's* KaZaa *ruling*, 11 Media & Arts L. Rev. 1, 1 (2006) (describing *Grokster* as a "struggle to balance meaningful protection for works of authorship against the progress of technological innovation").

The requirement of "purposeful, culpable expression and conduct" for inducement liability, *Grokster*, 545 U.S. at 937, was designed to maintain that balance. Because neither "mere knowledge of infringing potential or actual infringing uses" nor "ordinary acts incident to product distribution" could be swept up within *Grokster*'s inducement rule, the Court concluded that the rule "does nothing to compromise legitimate commerce or discourage innovation having a lawful promise." *Id.*

Accordingly, the clear intent requirement laid out by *Grokster* not only is well established in law, but also is constitutionally required. Patent law, as explained above, is limited by the Constitution in the same manner as copyright law. *See supra* p. 5. Insofar as Commil and the Solicitor General ask this Court for a lower level of requisite intent for proving inducement, *see* Pet'r Br. 16; Gov't Br. 9, that request is constitutionally suspect.

III. COMMIL'S PROPOSED STANDARD, IF APPLIED TO COPYRIGHT INDUCEMENT, WOULD HAVE NEGATIVE PRACTICAL CONSEQUENCES

If mere notice of infringement could satisfy the scienter requirement of copyright inducement, analogous to what Commil proposes for patent inducement, it would unexpedtedly put myriad product and service providers at risk for copyright liability, with its powerful attendant remedies such as injunctions and statutory damages. *See* 17 U.S.C. §§ 502(a), 504(c). This would have at least two seriously problematic consequences. First, it would swallow up key exceptions and defenses to secondary liability, in particular *Sony*'s safe harbor for articles with substantial noninfringing uses. Second, it would disrupt copyright's careful balance to the detriment of innovators creating valuable new products and services, thus impeding innovation.

A. THE "MERE NOTICE OF INFRINGEMENT" STANDARD IS INCOMPATIBLE WITH OTHER FORMS OF SECONDARY COPYRIGHT LIABILITY

Besides inducement, copyright law includes two forms of secondary liability: contributory infringement

and vicarious liability, each with its own specific limitations and exceptions. *See* Melville B. Nimmer & David Nimmer, *Nimmer on Copyright* §§ 12.04[2]–[4] (2014). But if mere notice of infringement could give rise to inducement liability, then those judiciously crafted limitations and exceptions would be swept away, as explained below.

1. Commil's "mere notice" standard would eviscerate a powerful exception to contributory copyright infringement, the substantial noninfringing uses test. Contributory infringement occurs when one "with knowledge of the infringing activity . . . materially contributes to the infringing conduct of another," *Sony*, 464 U.S. at 487, such as by "provision of machinery or goods that facilitate the infringement," *Faulkner v. Nat'l Geographic Soc'y*, 211 F. Supp. 2d 450, 473 (S.D.N.Y. 2002).

But there is an important exception to contributory infringement: such liability may not arise solely based on a product that is "widely used, for legitimate, unobjectionable purposes. Indeed, it need merely be capable of substantial noninfringing uses." *Sony*, 464 U.S. at 442. Much like the *Grokster* intent standard, *see* Section II.B *supra* p. 11, this Court arrived at the "substantial noninfringing uses" exception based on a need to "strike a balance between a copyright holder's legitimate demand . . , and the rights of others freely to engage in substantially unrelated areas of commerce." *Sony*, 464 U.S. at 442.

Since the Betamax videocassette recorders in *Sony* were capable of such substantial noninfringing uses, they fell within the safe harbor and thus could not give rise to contributory infringement. *See id.* at 456. But if mere notice of infringement could satisfy the scienter element

of inducement, then the opposite result would have obtained. Sony obviously satisfied the device distribution requirement of *Grokster*'s inducement test. *See* 545 U.S. at 936. And Sony had "constructive knowledge" of infringement. *Sony*, 464 U.S. at 426. Thus, under Commil's proposed formulation of inducement, distribution of a product with potential for even minimal infringing use could give rise to liability for copyright infringement, despite this Court's specific conclusion to the contrary.

Besides creating this contradiction in the law, Commil's "mere notice" standard, if applied to *Sony*, would have caused a poor result for the public. The "substantial noninfringing uses" test "leaves breathing room for innovation and a vigorous commerce," *Grokster*, 545 U.S. at 933, permitting for new industries to flourish, such as the video rental market that arose following the videocassette recorder. *See* Section III.B *infra* p. 17. By cutting off this safe harbor, Commil's inducement standard would cut off the public from innovation and opportunities.

2. Commil's proposed rule also threatens the vicarious liability doctrine, creating infringement liability where courts previously and correctly found none. Generally, one who is "profiting from direct infringement while declining to exercise a right to stop or limit it" is vicariously liable for copyright infringement. *See Grokster*, 545 U.S. at 930; *Gershwin Publ'g Corp. v. Columbia Artists Mgmt., Inc.*, 443 F.2d 1159, 1162 (2d Cir. 1971) (identifying elements of vicarious liability as "right and ability to supervise" and "direct financial interest").

Sony also demonstrates how a defendant who was correctly held not liable for vicarious infringement would

likely have been deemed an inducer under the "mere notice of infringement" standard. Sony was held not vicariously liable because it was not in a position to control the use of copyrighted works by others. *See Sony*, 464 U.S. at 437. But, as explained above, the act of distributing the devices with notice that those devices were sometimes used for infringement would be sufficient to find inducement liability under a "mere notice" standard. Thus, with *Sony*, and generally with cases of device distribution, the distributor would bear liability for inducement even where the distributor lacks control over the infringement and therefore could not be vicariously liable.

Contributory infringement and vicarious liability thus both include particular exceptions which limit the doctrines' scope. Opening up inducement liability in copyright to a "mere notice of infringement" standard, as Commil proposes for patent, would effectively erase these exceptions, creating liability in situations where courts have previously decided that no liability should occur.

B. Automatic Inducement Liability Upon Mere Notice of Infringement Would Stifle Innovation

The *Grokster* intent requirement for copyright inducement does not only maintain doctrinal consistency and constitutional validity: it has the practical effect of protecting the most valuable and innovative technologies that the public enjoys today. But had the much lower "mere notice of infringement" standard held sway, many of those technologies would likely never have emerged, having been crushed under the weight of inducement liability. This is so for at least two reasons.

1. By effectively overriding the "substantial noninfringing uses" safe harbor of *Sony*, Commil's "mere notice" standard would asphyxiate the "breathing room for innovation and a vigorous commerce," this Court's stated rationale behind *Sony*'s safe harbor. *Grokster*, 545 U.S. at 933 (citing *Sony*, 464 U.S. at 442).

a. The substantial noninfringing uses doctrine promotes not only the devices that fall within the safe harbor, but also a vast and unexpected range of markets and innovations that follow on because of those devices. To eviscerate that doctrine with an overexpansive inducement regime would be to deny the public all of those follow-on benefits. The very technology at issue in *Sony*, the videocassette recorder, is a prime example of this.

Sony allowed for continued sales of VCRs by holding that their distribution would not give rise to contributory infringement, because the device had substantial noninfringing uses. *See* 464 U.S. at 456. But the VCR was not simply an exciting new product: it gave birth to the video rental and sales market. In 1985—one year after *Sony* was decided—revenues from those rentals and sales were estimated at $3.3 billion, nearly outstripping the estimated $3.7 billion in movie box office revenues. Aljean Harmetz, *Big Gains for Video Cassettes*, N.Y. Times, Aug. 21, 1985, C13. The movie industry, who had sought to blockade the VCR, now profited from it.

Besides creating video rental and sales markets, the VCR engendered innovation in media formats such as DVD and Blu-Ray, and "opened up new opportunities for classroom teachers." *See* Lori Widzinski, *"Step Away from the Machine": A Look at Our Collective Past*, 58 Libr. Trends 358, 370–74 (2010), *available at* URL *supra*

p. vii. These "unanticipated future benefits," whose value will "often exceed the immediate value of most new technologies," are the natural result of the *Sony* safe harbor. *See* Mark A. Lemley & R. Anthony Reese, *Reducing Digital Copyright Infringement Without Restricting Innovation*, 56 Stan. L. Rev. 1345, 1387 (2004). Were that safe harbor overtaken by an overbroad inducement test, these benefits may be delayed or even eliminated entirely.

b. This fact pattern was not unique to the VCR. Many new technologies open up new and unpredictable opportunities, but only because those technologies are sheltered within *Sony*'s safe harbor. As one scholar notes, new technologies often suffer from "innovation asymmetry," where infringing uses are "immediately apparent" but noninfringing uses are "less tangible and less apparent at the onset." Michael A. Carrier, *Innovation for the 21st Century: Harnessing the Power of Intellectual Property and Antitrust Law* 128 (2009).

For example, digital music players (such as Apple's iPod) can be used for infringing and noninfringing purposes. When the iPod was first introduced, digital music sales were far from prevalent, and certainly some iPod users infringed copyright. Three years later, lawmakers introduced legislation to augment the scope of copyright liability. *See* S. 2560, 108th Cong. (2004). The legislation was summarily rejected because it might have deemed such music players infringing contraband. *See* Declan McCullagh, *Senate Bill Would Ban P2P Networks*, CNet News (June 23, 2004), URL *supra* p. vi. But had it passed, it would have extinguished not only the market for such devices, but likely also the now $5.9 billion digital music industry. *IFPI Digital Music Report 2014: Lighting Up New Markets* 6 (2014), URL *supra* p. vi.

The list of innovations that might never have been is extensive: TiVo and Kindle, YouTube and Facebook, iPhone and Android—all general-purpose products capable of infringing as well as innumerable noninfringing uses. *See, e.g.*, Veronica Corsaro, *From Betamax to YouTube: How* Sony Corporation of America v. Universal City Studios, Inc. *Could Still Be a Standard for New Technology*, 64 Fed. Comm. L.J. 449, 450 (2012), *available at* URL *supra* p. v. The "mere notice" standard for inducement, because it would override the *Sony* safe harbor, puts not only these innovations at risk; it puts at risk all future innovations that depended on those first steps.[3]

2. Under the threat of crushing copyright liability, technology companies would be less likely to invest time and resources in developing new products. Computer technology frequently involves some degree of copying, making many of such devices capable of both infringing and noninfringing uses. *See* 17 U.S.C. § 117(a) (special exception to copyright for computer copying); Brief of Intel Corp. as Amicus Curiae at 22, *Grokster* (Mar. 1, 2005) (No. 04-480) [hereinafter Intel Brief], *available at* URL *supra* p. v ("Digital technologies are by their nature copying technologies."); Lemley & Reese, *supra*, at 1355.

If mere notice of infringement was sufficient scienter for inducement, then not one of those technologies could be distributed without running a risk of inducement liability arising from a single notice letter. With a standard that so overwhelmingly favors copyright owners, technology companies would be unable to create new products

[3] *Cf. KSR Int'l Co. v. Teleflex Inc.*, 550 U.S. 398, 427 (2007) (noting that "progress beginning from higher levels of achievement is expected in the normal course").

without permission from every author whose work might be used with the technology by any user. The resulting thicket of potential copyright liability closely parallels the thicket of software patents that affects complex, multifunctional computing devices,[4] suggesting yet another reason why this Court should be wary of opening up inducement liability as Commil seeks, in either domain of intellectual property.

Thus, in briefing this Court on *Grokster*, technology companies large and small warned that overbroad secondary liability "may cause innovative companies . . . to abandon promising projects and deprive the public of the benefits of innovation." Brief of Amici Curiae Emerging Technology Companies at 17, *Grokster* (Mar. 1, 2005) (No. 04-480), URL *supra* p. v; *accord* Intel Brief, *supra*, at 5 (Intel would "have no choice but to withhold from the market socially and economically useful products").

The same atmosphere of increased financial and legal risk that would deter innovation by existing companies and startups would also deter venture capital and other financial investments in this type of innovation. *See* Carrier, *supra*, at 133. This entirely rational fear of overwhelming liability would exert a chilling effect on investment decisions, and, in turn, on innovation. *See id.* Entrepreneurs, innovators, and the public would all lose.

"If innovation is constantly checked by this uncertain and unlimited liability, we will have much less vibrant innovation and much less creativity." Lawrence Lessig,

---

[4] *See* RPX Corp., Registration Statement (Form S-1), at 55 (Sept. 2, 2011), *available at* URL *supra* p. vii (estimating that "there are more than 250,000 active patents relevant to today's smartphones").

Free Culture 192 (2004). The "mere notice of infringement" standard of inducement that Commil urges would create exactly this uncertain and unlimited liability, denying the public that vibrant innovation and creativity in the process. That is why this Court decidedly rejected such a standard in *Grokster*, and it is why this Court should decidedly reject it now.

* * *

It is an oft-cited saying of Justice Holmes, that "a page of history is worth a volume of logic." *New York Trust Co. v. Eisner*, 256 U.S. 345, 349 (1921). Perhaps, in the present case about inducement of patent infringement, a page of copyright law may serve a similar purpose. Copyright law teaches the importance, noted by the Framers themselves, of a balanced system that works primarily toward the public good rather than private reward. Copyright law instructs that all of its doctrines, including that of inducement liability, must reach toward that end of balance and public advancement. Copyright law warns of the dangers of widening the net of infringement, which may unintentionally snare new technologies and innovations, stifling them before they can grow into beneficial fixtures of the consumer economy.

These lessons can be applied to patent law, and they should be applied to patent law. Patents, just like copyrights, must serve that same purpose of advancing the public interest, and must manage that same balance. Taking a page from the doctrine of copyright inducement, this Court should find that only a clear, strong test of intent as elucidated in *Grokster* will suffice to satisfy constitutional requirements, policy interests, and public advancement. It should accordingly affirm the Court of Appeals.

CONCLUSION

For the foregoing reasons, the Court should affirm the Court of Appeals.

Respectfully submitted,

CHARLES DUAN
Counsel of Record
PUBLIC KNOWLEDGE
1818 N Street NW, Suite 410
Washington, DC 20036
(202) 861-0020
cduan@publicknowledge.org

Counsel for Public Knowledge

PHILLIP R. MALONE
JEF PEARLMAN
JUELSGAARD INTELLECTUAL
PROPERTY & INNOVATION CLINIC
MILLS LEGAL CLINIC
STANFORD LAW SCHOOL
559 Nathan Abbott Way
Stanford, CA 94305
(650) 725-6369
jipic@law.stanford.edu

(Continued on next page)

MICHAEL GODWIN
R STREET INSTITUTE
1050 17th Street NW, Suite 1150
Washington, DC 20036
(202) 525-5717
mgodwin@rstreet.org

Counsel for the R Street Institute

KRISTA COX
ASSOCIATION OF RESEARCH LIBRARIES
21 Dupont Circle NW, #800
Washington, DC 20036
(202) 296-2296
krista@arl.org

Counsel for the American Library Association, Association of Research Libraries, and Association of College and Research Libraries

ERIK STALLMAN
CENTER FOR DEMOCRACY AND TECHNOLOGY
1634 I Street NW, #1100
Washington, DC 20006
(202) 637-9800
estallman@cdt.org

Counsel for the Center for Democracy and Technology

February 24, 2015

AMICUS CURIAE BRIEF

Supreme Court, U.S.
FILED
FEB 25 2015
OFFICE OF THE CLERK

No. 13-896

IN THE

Supreme Court of the United States

COMMIL USA, LLC,
Petitioner,

—v.—

CISCO SYSTEMS, INC.,
Respondent.

On Writ of Certiorari to the United States Court of Appeals for the Federal Circuit

BRIEF *AMICI CURIAE* FOR SIXTEEN INTELLECTUAL PROPERTY LAW PROFESSORS IN SUPPORT OF THE RESPONDENT

TIMOTHY R. HOLBROOK
Counsel of Record
Emory University
School of Law
1301 Clifton Road
Atlanta, Georgia 30322
tholbrook@emory.edu
(404) 712-0353

SARAH M. SHALF
Of Counsel
Emory Law School
Supreme Court
Advocacy Program
1301 Clifton Road
Atlanta, Georgia 30322
sshalf@emory.edu
(404) 712-4652

TABLE OF CONTENTS

TABLE OF CONTENTS i

TABLE OF CITED AUTHORITIES iii

INTEREST OF THE *AMICI CURIAE* 1

SUMMARY OF THE ARGUMENT 1

ARGUMENT 2

I. A GOOD FAITH BELIEF THAT A PATENT IS INVALID NEGATES THE REQUISITE SCIENTER FOR ACTIVE INDUCEMENT OF PATENT INFRINGEMENT 2

A. Only Truly Culpable Parties Should Be Held Liable for Inducing Patent Infringement.... 3

B. A Party with a Good Faith Belief of Invalidity is Not a Culpable Party and Instead is Engaging in Laudable, Pro-Competitive Conduct 4

C. Allowing Liability In the Face of a Good Faith Belief of Invalidity Inappropriately Discourages Challenges to Patents..... 8

II. THE GOOD FAITH BELIEF IN INVALIDTY SHOULD IMMUNIZE THE INFRINGER AS TO PAST DAMAGES ONLY AND NOT PROSPECTIVE RELIEF 12

A. Once a Court Finds the Patent Not Invalid and Infringed, Future Acts of Inducement

Constitute Infringement and Are Subject to Injunction or Ongoing Royalties 12

B. The Risk of Exposure to Prospective Relief Mitigates the Risk of "Rubber Stamp" Opinions of Counsel 15

C. The Argument Regarding the Difficulties of Assessing Damages is a Red Herring 17

CONCLUSION 18

APPENDIX – LIST OF SIGNATORIES 1a

TABLE OF CITED AUTHORITIES

CASES *Page*

A.C. Aukerman Co. v. R.L. Chaides Constr. Co.,
960 F.2d 1020 (Fed. Cir. 1992) 15

Aronson v. Quick Point Pencil Co.,
440 U.S. 257 (1979) 9

Bose Corp. v. SDI Techs., Inc.,
558 Fed. Appx. 1012 (Fed. Cir. 2014) 14

Commil USA, LLC. v. Cisco Sys., Inc.,
720 F.3d 1361 (Fed. Cir. 2013) 7

eBay Inc. v. MercExchange, L.L.C.,
547 U.S. 388 (2006) 13

Global-Tech Appliances, Inc. v. SEB S.A.,
131 S. Ct. 2060 (2011) ..... *passim*

Kinetic Concepts, Inc., v. Blue Sky Med. Grp., Inc.,
554 F.3d 1010 (Fed. Cir. 2009) 7

Lear, Inc. v. Adkins,
395 U.S. 653 (1969) 2, 9, 11

Limelight Networks, Inc. v. Akamai Techs., Inc., 134 S. Ct. 2111 (2014) 2

Henry v. A. B. Dick Co.,
224 U.S. 1 (1912) 4

MedImmune, Inc. v. Genentech, Inc.,
549 U.S. 118 (2007) 9

Medtronic, Inc. v. Mirowski Family Ventures, LLC,
134 S.Ct. 843 (2014) 9

Microsoft Corp. v. i4i Ltd. P'ship,
131 S.Ct. 2238 (2011) 10

N.Y. Scaffolding Co. v. Whitney,
224 F. 452 (8th Cir. 1915) 4

Paice LLC v. Toyota Motor Corp.,
504 F.3d 1293, (Fed. Cir. 2007) 13

Petrella v. Metro-Goldwyn-Mayer, Inc.,
134 S.Ct. 1963 (2014) 15

SCA Hygiene Prods. Aktiebolag v. First Quality Baby Prods., LLC, 767 F.3d 1339
(Fed. Cir. 2014) 15

STATUTES

35 U.S.C. § 271 ..... *passim*

OTHER AUTHORITIES

Br. of Amicus Curiae Gilead Sciences, Inc. in Supp. of Pet'r 17

Br. for Intellectual Prop. Owners Ass'n as Amicus Curiae in Supp. of Pet'r 16

Christopher R. Leslie, *The Anticompetitive Effects of Unenforced Invalid Patents*, 91 MINN. L. REV. 101 (2006) 10

FED. TRADE COMM'N, TO PROMOTE INNOVATION: THE PROPER BALANCE OF COMPETITION AND PATENT LAW AND POLICY (2003) 10

Jason A. Rantanen, *An Objective View of Fault in Patent Infringement*, 60 AM. U. L. REV. 1575 (2011) 13

John R. Allison, Mark A. Lemley, and David L. Schwartz, *Understanding the Realities of Modern Patent Litigation*, 92 TEXAS L. REV. 1769 (2014) 10

Joseph Scott Miller, *Building a Better Bounty: Litigation-Stage Rewards for Defeating Patents*, 19 BERKELEY TECH. L. J. 667 (2004) 9, 10

Kristin M. Hagen, *Eyes Wide Shut: Induced Patent Infringement and the Willful Blindness Standard*, 17 MARQ. INTELL. PROP. L. REV. 305 (2013) 5

Lynda J. Oswald, *The Intent Element of "Inducement to Infringe" Under Patent Law: Reflections on* Grokster, 13 MICH. TELECOMM. & TECH. L. REV. 225 (2006) 3, 4

Mark A. Lemley, *Inducing Patent Infringement*, 39 UC DAVIS L. REV. 225 (2005) 11

Michael N. Rader, *Toward a Coherent Law of Inducement to Infringe*, 10 FED. CIR. B.J. 299 (2000) 16

Richard Marsh, *The Aftermath of Akamai: Induced Infringement and Opinions of Counsel*, 7 LANDSLIDE Sept./Oct. 2014, at 29 6

Timothy R. Holbrook, *The Intent Element of Induced Infringement*, 22 SANTA CLARA COMPUTER AND HIGH TECH. L. J. 399 (2006) 13, 16, 17

INTEREST OF THE *AMICI CURIAE*[1]

Amici are law professors who specialize in intellectual property law and who have previously published on, or have interest in, the issue of induced infringement and, more broadly, the proper functioning of the patent system. Amici have no personal stake in the outcome of this case, but have an interest in seeing that the patent laws develop in a way that promotes rather than impedes innovation.

SUMMARY OF THE ARGUMENT

This Court's decision in *Global-Tech Appliances, Inc. v. SEB S.A.*, 131 S. Ct. 2060, 2068 (2011), incentivized parties to review patents before engaging in activity that could result in inducement of patent infringement. Eliminating a good faith belief that the patent is invalid as a way to negate the required intent for induced infringement undermines this incentive. Removal of a good faith belief as a defense also undermines the policy

---

[1] Pursuant to Supreme Court Rule 37.6, *amici curiae* affirm that no counsel for a party authored this brief in whole or in part, that no counsel or a party made a monetary contribution intended to the preparation or submission of this brief and no person other than *amici curiae*, their members, or their counsels made a monetary contribution to its preparation or submission.

Pursuant to Supreme Court Rule 37.2, each party has consented to the filing of this brief, and copies of the consents are on file with the Clerk of the Court.

articulated by this Court in *Lear, Inc. v. Adkins*, 395 U.S. 653 (1969), of encouraging parties to challenge likely invalid patents through litigation. Finally, this Court should make clear that a good faith belief that the patent is invalid or not infringed should only bar past damages; prospective relief, such as an injunction or ongoing royalties, should remain available to the patent owner. The availability of prospective relief acts as a check on the problem of "rubber stamp" legal opinions.

ARGUMENT

I. A GOOD FAITH BELIEF THAT A PATENT IS INVALID NEGATES THE REQUISITE SCIENTER FOR ACTIVE INDUCEMENT OF PATENT INFRINGEMENT

Under 35 U.S.C. § 271(b), a third party can be held liable for the directly infringing acts of another if the third party has "actively induced" that infringement. *See Limelight Networks, Inc. v. Akamai Techs., Inc.*, 134 S. Ct. 2111, 2118-19 (2014) ("[T]he reason Limelight could not have induced infringement under § 271(b) is . . that no direct infringement was *committed*."). This Court has made clear that, to induce infringement, the inducer must possess the requisite knowledge and intent. *See Global-Tech Appliances, Inc. v. SEB S.A.*, 131 S. Ct. 2060, 2068 (2011). Specifically, the party must have "knowledge that the induced acts constitute patent infringement." *Id.* at 2068.

This case involves specifically whether one can have the requisite culpable mental state to induce infringement if she believes the patent is invalid. This Court should answer that question in the negative, holding that a good faith belief in invalidity acts as a defense to active inducement, but only as to past damages, and not prospective relief.

A. Only Truly Culpable Parties Should Be Held Liable for Inducing Patent Infringement.

When courts find that parties have induced infringement, they are holding those parties liable for the infringing acts of others, even though their own behavior does not infringe the patent. Indeed, the allegedly infringing conduct may be laudably pro-competitive. As such, liability for inducing infringement should be the exception, not the rule. The doctrine should not create an opportunity for patentees to pursue innocent parties for additional payment. This Court noted as much in *Global-Tech*, specifically noting that an inducer must have "knowledge that the induced acts constitute patent infringement." 131 S.Ct. at 2068.

The intent requirement is consistent with the common law origins of § 271(b). The 1952 Patent Act codified what had developed in the common law as indirect infringement, which Congress bifurcated into active inducement under § 271(b) and contributory infringement under § 271(c). Pre-1952 cases required an intent for a party to be liable for indirect infringement. Lynda J. Oswald, *The Intent Element of "Inducement to Infringe" Under Patent*

Law: Reflections on Grokster, 13 MICH. TELECOMM. & TECH. L. REV. 225, 227–28 (2006). Indirect infringement was defined as the "*intentional* aiding of one person by another in the unlawful making, or selling, or using of a third person's patented invention." *N.Y. Scaffolding Co. v. Whitney*, 224 F. 452, 459 (8th Cir. 1915) (citing *Henry v. A. B. Dick Co.*, 224 U.S. 1, 34 (1912)). Absent the element of intent, the inducing infringer cannot be a truly culpable party.

B. A Party with a Good Faith Belief of Invalidity is Not a Culpable Party and Instead is Engaging in Laudable, Pro-Competitive Conduct

The question in this case thus becomes whether a party with a good faith belief that a patent is invalid nevertheless constitutes a culpable party that should be held liable. The answer to that question is "no" because holding otherwise undermines important policies that underlie the patent system.

1. Global-Tech *Created an Incentive for Parties to Review Patents*

The patent system operates on a variation of constructive notice: We hope that third parties are reading patents not only to learn from their disclosure but also to assess whether they infringe them. This dynamic in part justifies the strict liability regime that we have for direct infringement.

We should also hope that potential inducers would review patents to assess their potential liability. In fact, one of the important collateral

consequences of this Court's adoption of the willful blindness standard in *Global-Tech* is that companies now have a stronger incentive to search for and review patents.

Before *Global Tech*, parties could have avoided liability for inducing infringement by simply ignoring patents altogether, burying their heads in the proverbial sand. Now such ostrich-like behavior will not immunize the party. *Global-Tech* held that "willful blindness" constitutes the required knowledge under § 271(b). *Global-Tech*, 131 S.Ct. at 2069. Specifically, the Court held that the knowledge requirement is satisfied if the defendant "subjectively believe[s] that there is a high probability that a fact exists," *i.e.* that there is a patent, and the defendant "take[s] deliberate actions to avoid learning of that fact." *Id.* at 2070. The message was clear: the law should not "protect[] parties who actively encourage others to violate patent rights and who take deliberate steps to remain ignorant of those rights despite a high probability that the rights exist and are being infringed." *Id.* at 2069 n. 8. *See* Kristin M. Hagen, *Eyes Wide Shut: Induced Patent Infringement and the Willful Blindness Standard*, 17 MARQ. INTELL. PROP. L. REV. 305, 317 (2013).

By adopting the willful blindness doctrine, the Court encouraged parties to seek out legal advice pertaining to whether their actions constitute infringement. If they fail to look for patents, they can be found to have knowledge of the patent, and they will not have the opportunity to develop a good faith belief in non-infringement or invalidity to

protect themselves. Better to look and develop a good faith belief than not to look and risk infringement liability. Potential inducers "will not suffer a negative inference if they ultimately decide not to rely on those opinions." Richard Marsh, *The Aftermath of Akamai: Induced Infringement and Opinions of Counsel*, 7 LANDSLIDE Sept./Oct. 2014, at 29 (discussing 35 U.S.C. § 298, which states that failing to present "the advice of counsel with respect to any allegedly infringed patent...to the court or jury may not be used to prove that the accused infringer...intended to induce infringement of the patent").

2. *Allowing Liability for Induced Infringement When a Party Has a Good Faith Belief the Patent is Invalid Undermines the Incentive to Review Patents*

Holding that a good faith belief cannot act as a defense to inducement, however, would undermine that beneficial side-effect of *Global-Tech*. If the good faith defense is eliminated, then the review of the patent may nevertheless result in liability, reducing the incentive to review them to begin with.

From the perspective of a potential infringer, there is no difference between a determination that either the conduct is non-infringing or the patent is invalid: there will be no liability for inducing the relevant allegedly infringing acts. In either scenario, there would be no direct infringement and, therefore, no liability for inducing infringement. From the *ex ante* perspective, therefore, a party who has investigated a patent and thinks there will not be

infringement or that the patent is invalid would believe that their activities would not trigger liability.

In light of such a belief, then, the inducer cannot be viewed as having the required culpability. The Federal Circuit has recognized this fact on the non-infringement side of the ledger, holding that a good faith belief in non-infringement negates the required intent under § 271(b). See *Commil USA, LLC. v. Cisco Sys., Inc.*, 720 F.3d 1361, 1368 (Fed. Cir. 2013) (discussing cases where a demonstrated belief of non-infringement supported a jury verdict that intent was lacking). Because the plaintiff must prove "that the defendant possessed specific intent to encourage another's infringement," necessarily a good faith belief in non-infringement negates that specific intent. *Kinetic Concepts, Inc., v. Blue Sky Med. Grp., Inc.*, 554 F.3d 1010, 1024 (Fed. Cir. 2009).

To conclude that a good-faith belief that the patent is invalid is insufficient to negate the requisite intent, however, introduces an odd asymmetry into the law. It makes no sense to treat a good faith belief in non-infringement and a good faith belief in invalidity differently. A party that can prove its good faith belief that it would not be liable does not possess the specific intent to induce infringement that is contemplated by the induced infringement statute.

Moreover, permitting liability for inducing infringement in the context of a good faith belief that the patent is invalid undermines the benefits of *Global Tech.* A party that takes the initiative to proactively search for patents and to determine in

good faith whether its conduct will result in liability now may be exposed to liability even if she believes the patent is invalid, reducing the incentive to incur the cost to perform such a review at all.

C. Allowing Liability In the Face of a Good Faith Belief of Invalidity Inappropriately Discourages Challenges to Patents

Not only does elimination of the good faith belief as a defense undermine the effects of *Global-Tech*, it also would undermine the policy articulated by this Court in favor of challenging likely invalid patents through litigation. This Court has emphasized a "strong federal policy favoring free competition in ideas which do not merit patent protection." *Lear, Inc. v. Adkins*, 395 U.S. 653, 656 (1969). If a party believes a patent is invalid, we should want them to enter the market and, if sued, to challenge the patent they believe to be invalid.

This Court's cases confirm this policy interest. In *Lear*, the Court rejected licensee estoppel, which precluded a licensee from challenging a patent's validity. *Id.* at 671. In so doing, the Court noted that contractual interest in good faith negotiations is trumped by "the important public interest in permitting full and free competition in the use of ideas which are in reality a part of the public domain." *Id.* at 670. This Court subsequently noted the "desirability of encouraging licensees to challenge the validity of patents, to further the strong federal policy that only inventions which meet the rigorous requirements of patentability shall be

withdrawn from the public domain." *Aronson v. Quick Point Pencil Co.*, 440 U.S. 257, 264 (1979). The Court later furthered this policy aim in *MedImmune, Inc. v. Genentech, Inc.*, 549 U.S. 118 (2007), holding that the licensee "was not required...to break or terminate [its] license agreement before seeking a declaratory judgment in federal court that the underlying patent is invalid, unenforceable, or not infringed." *Id.* at 136. Most recently, in *Medtronic, Inc. v. Mirowski Family Ventures, LLC*, 134 S.Ct. 843 (2014), this Court noted that "licensees may often be the only individuals with enough economic incentive to litigate questions of a patent's scope." *Id.* at 852 (quoting *Lear*, 395 U.S. at 670).

Encouraging the challenge of patents believed to be invalid is important to clear markets of inappropriately issued patents. Invalidation of a patent, in contrast to a non-infringement determination, is in important respects a public good that may be undersupplied: securing an invalidity judgments costs the accused infringer but benefits everyone in the market. *See generally* Joseph Scott Miller, *Building a Better Bounty: Litigation-Stage Rewards for Defeating Patents*, 19 BERKELEY TECH. L. J. 667, 677–95 (2004) (discussing an accused infringer's incentives to challenge a patent's validity versus accepting an attractive settlement). The patent becomes invalid as to the world, including the accused infringer's competitors who will not have born the cost of the challenge. Challenging patents that are believed to be invalid vindicates "the important public interest in permitting full and free competition in the use of ideas which are in reality a part of the public domain." *Lear*, 395 U.S. at 673–74.

Indeed, because of the risk of free riding—that those who did not incur the cost of challenging the patent can now practice the invention if the patent is invalidated—it is important to create incentives to challenge patents. *See* Miller, *supra*, at 688–95 (discussing undersupply of validity challenges).

The need to preserve the incentive to challenge patents in court is great. The data show that many litigated patents are in fact invalidated. A recent study of all patent cases filed in 2008-2009 showed that validity challenges were successful 42.4% of the time. John R. Allison et al., *Understanding the Realities of Modern Patent Litigation*, 92 TEXAS L. REV. 1769, 1787 (2014). Such an invalidity rate is particularly striking given that patents are presumed valid and accused infringers must prove invalidity under the heightened clear and convincing standard. *Microsoft Corp. v. i4i Ltd. P'ship*, 131 S.Ct. 2238, 2242 (2011). Invalid patents can have significant impacts on competition, even if they are not enforced. *See generally* Christopher R. Leslie, *The Anticompetitive Effects of Unenforced Invalid Patents*, 91 MINN. L. REV. 101, 113-139 (2006) (discussing the relationship between patent law and antitrust). The Federal Trade Commission has noted that "[p]oor patent quality and legal standards and procedures that inadvertently may have anticompetitive effects can cause unwarranted market power and can unjustifiably increase costs. Such effects can hamper competition that would otherwise stimulate innovation." FED. TRADE COMM'N, TO PROMOTE INNOVATION: THE PROPER BALANCE OF COMPETITION AND PATENT LAW AND POLICY 5 (2003). As such, there are a considerable

number of invalid patents lurking in the marketplace, with potential harmful consequences for competition, and *Lear* and its progeny support a policy of incentivizing challenges to those patents.

Permitting liability even when a potential inducer has a good faith belief in invalidity undermines this interest in challenging patents because it risks chilling appropriate market entry and the potential attendant patent challenge. With a good faith belief defense, the company can enter the market with a reduced sense of risk that their behavior will trigger liability. If they have such a good faith belief, then we should want them to enter the market to challenge the patent. The potential exposure to liability may deter such behavior.

Of course, ultimately, that accused inducer's belief must have been wrong for this issue to arise in litigation—a court has found the patent infringed and not invalid. So, as in this case, the infringer "may believe the patent is invalid," but, "[o]f necessity, litigated inducement decisions are all cases in which those beliefs turn out to be wrong; there can be no inducement if there is no direct infringement of a valid patent." Mark A. Lemley, *Inducing Patent Infringement*, 39 UC DAVIS L. REV. 225, 243 (2005).

Nevertheless, from the *ex-ante* perspective, we would hope that parties holding such a belief would enter the market. Conversely, if a party can be liable for inducement even if they believe the patent is invalid, they may decline to enter the market or engage in expensive design-around activity if they are risk averse. A conclusion that a party may still

be liable for inducing infringement if she holds a good faith belief that the patent is invalid undermines the interest in encouraging patent challenges.

II. THE GOOD FAITH BELIEF IN INVALIDTY SHOULD IMMUNIZE THE INFRINGER AS TO PAST DAMAGES ONLY AND NOT PROSPECTIVE RELIEF

A. Once a Court Finds the Patent Not Invalid and Infringed, Future Acts of Inducement Constitute Infringement and Are Subject to Injunction or Ongoing Royalties

Of course, as is the case here, the only reason the issue of the inducer's good faith belief arises in litigation is because that belief was demonstrated to be incorrect in litigation. If the belief was correct, then the court would invalidate the patent, precluding liability. The question then is the extent to which the good faith belief in invalidity should serve as a defense.

The good faith belief should act as a defense only to past damages. Because we want to encourage market entry and patent challenges, it makes sense to privilege such pre-litigation conduct. The good faith belief in invalidity, however, would not bar prospective relief. Once a court has rejected the accused inducer's invalidity and non-infringement arguments, there is no longer a possibility that the inducer has a good faith basis for believing that the patent is invalid or not infringed. Unless the infringer alters her conduct after a final determination of infringement and validity, any

ongoing behavior will be infringing. Consequently, the inducer should be subject to a permanent injunction, if warranted,[2] or liable for future damages. *See* Timothy R. Holbrook, *The Intent Element of Induced Infringement*, 22 SANTA CLARA COMPUTER AND HIGH TECH. L. J. 399, 405-07 (2006); *see also* Jason A. Rantanen, *An Objective View of Fault in Patent Infringement*, 60 AM. U. L. REV. 1575, 1604-05 n.162 (2011) ("[W]ith respect to future infringement, arguably neither contributory infringement nor inducement requires the demonstration of fault . . . In short, when litigating over future infringement, it should not be necessary to establish fault with respect to whether or not the third party conduct infringes."). Once the patent is found not invalid and infringed, the intent of the infringer with respect to validity no longer matters. Any future infringing conduct should be stopped through injunctive relief or should be subject to an ongoing royalty.

The courts have not made clear whether a good faith belief in invalidity, or non-infringement for that matter, precludes prospective relief. In one recent non-precedential decision, the Federal Circuit

---

[2] This Court rejected the Federal Circuit's near *per se* rule of granting permanent injunctions if a party is found to infringe a valid patent. *eBay Inc. v. MercExchange, L.L.C.*, 547 U.S. 388, 393-94 (2006). If a party is not entitled to the four-factor test articulated for a permanent injunction, it may still subject to paying an ongoing royalty. *See, e.g.*, *Paice LLC v. Toyota Motor Corp.*, 504 F.3d 1293, 1314 (Fed. Cir. 2007) ("Under some circumstances, awarding an ongoing royalty for patent infringement in lieu of an injunction may be appropriate.").

explored the temporal aspect of such a good faith belief but did not specifically hold that it failed to negate injunctive relief or ongoing damages. *Bose Corp. v. SDI Techs., Inc.*, 558 Fed. Appx. 1012 (Fed. Cir. 2014). In *Bose*, the court addressed the argument that the district court erred because its grant of summary judgment inappropriately "insulated SDI from potential post-verdict liability." *Id.* at 1023. The Federal Circuit agreed, noting that, "[a] jury could, at trial, find the patent not invalid and infringed. In this scenario, SDI's opinion of counsel would not shield it from post-verdict liability because SDI could not credibly argue that it maintained its good-faith belief of invalidity following a verdict to the contrary. The summary judgment improperly absolved SDI of potential post-verdict liability." *Id.* The court remanded, however, because "[a] material dispute remain[ed] on the issue of whether SDI relied in good-faith on its opinion of counsel." *Id.* at 1024.

Bose, however is non-precedential, and the discussion of post-verdict liability is technically dicta. Thus, although courts have alluded to this temporal aspect of induced infringement, no court has expressly held that inducers should be subject to prospective relief, regardless of their good faith belief. This Court should make clear that a finding of a good faith belief does not immunize the infringer from prospective relief.

Under this proposed standard, the good faith belief in invalidity or non-infringement would function similarly to the way the defense of laches currently operates in patent law. Laches is used as a

defense when the accused infringer has been materially prejudiced by the patentee's unreasonable delay in bringing suit. *A.C. Aukerman Co. v. R.L. Chaides Constr. Co.*, 960 F.2d 1020, 1028–29 (Fed. Cir. 1992) (en banc) ("[L]aches may be defined as the neglect or delay in bringing suit to remedy an alleged wrong, which taken together with lapse of time and other circumstances, causes prejudice to the adverse party and operates as an equitable bar."). Under current Federal Circuit law, however, laches only acts as a defense to past damages. *Id.* at 1028. ("Where the defense of laches is established, the patentee's claim for damages prior to suit may be barred.").[3] The good faith belief would operate similarly here, negating only past damages and not prospective relief.

B. The Risk of Exposure to Prospective Relief Mitigates the Risk of "Rubber Stamp" Opinions of Counsel

Opponents of the good faith belief defense have expressed the concern of "rubber stamp" opinion letters – a party will simply hire an attorney who will opine that there is no infringement or the patent is invalid, allowing the party to escape liability for

---

[3] Admittedly, the *en banc* Federal Circuit is revisiting its laches doctrine in light of this Court's decision in *Petrella v. Metro-Goldwyn-Mayer, Inc.*, 134 S.Ct. 1963 (2014), which addressed laches in the copyright context. *See SCA Hygiene Prods. Aktiebolag v. First Quality Baby Prods., LLC*, 767 F.3d 1339, 1344-34 (Fed. Cir. 2014) (declining to change law in light of *Petrella*), *vacated en banc*, No. 2013-1564, 2014 WL 7460970 (Fed. Cir. Dec. 30, 2014).

inducement. *See, e.g.*, Br. for Intellectual Prop. Owners Ass'n as Amicus Curiae in Supp. of Pet'r 2 ("The end result is that virtually all potential infringers can easily absolve themselves of liability for inducing infringement of a valid patent for the price of an opinion letter from counsel."). One commentator has compared these opinion letters to consumer warning labels placed on products, which are viewed purely as a formality. *See* Michael N. Rader, *Toward a Coherent Law of Inducement to Infringe*, 10 Fed. Cir. B.J. 299, 332 (2000).

Such concerns are overstated. Minimally, this concern rests entirely on the assumption that attorneys would risk committing professional misconduct by rubber-stamping a letter that provides a legally inaccurate opinion. It is illogical to assume that an attorney would knowingly jeopardize her standing in the profession over an opinion letter.

More importantly, it ignores that, under the approach suggested in this brief, exposure to prospective relief would cabin an attorney's discretion in providing her opinion. As one commentator has noted:

> If the relevance of the accused inducer's belief is limited to past damages, however, then the risk of rubberstamping by opinion letters is mitigated. The possibility of a permanent injunction would act as a check on the attorney being overly optimistic about the likelihood of defeating an infringement suit. The client is relying on the opinion to plan

> its business operations and would want an honest assessment of the risk that they may have to shut operations down or alter them to avoid infringement.

Holbrook, *Intent Element*, at 409–10. That their clients may be exposed to future liability and injunctive relief should act as a check on any intuition that they should simply issue "rubber stamp" opinion letters.

C. The Argument Regarding the Difficulties of Assessing Damages is a Red Herring

Another proffered argument against the bifurcated approach offered in this brief is that determining when the accused infringer has lost, and thus when damages begin to accrue, would be difficult. Br. of Amicus Curiae Gilead Sciences, Inc. in Supp. of Pet'r 20. Additionally, the patent holder could be unfairly denied damages for the years the case spends in litigation. *Id.*

Such arguments are without merit. This argument rests on the false premise that courts cannot properly deal with such grey areas. To begin, complexities of litigation and damages calculations should not drive substantive patent law decisions. Lawyers should be able to sort out whatever point in time past damages end and future relief begins. Indeed, such complexities could arise in any case where injunctive relief comes into play. The Federal Circuit's current approach to laches belies the argument that such an approach is unworkable. Courts are well equipped to make the appropriate

determinations that take into consideration the rights of a patent holder on a case-by-case basis.

CONCLUSION

For the foregoing reasons, this Court should confirm that a good faith belief in the invalidity of a patent should shield an accused infringer from liability for past damages. A good faith belief in either non-infringement or invalidity, however, should not negate the possibility of prospective relief, such as injunctive relief or ongoing damages.

Respectfully submitted,

TIMOTHY R. HOLBROOK
Counsel of Record
Emory University
School of Law
1301 Clifton Road
Atlanta, Georgia 30322
tholbrook@emory.edu
(404) 712-0353

SARAH M. SHALF
Of Counsel
Emory Law School
Supreme Court
Advocacy Program
1301 Clifton Road
Atlanta, Georgia 30322
sshalf@emory.edu
(404) 712-4652

APPENDIX – LIST OF SIGNATORIES*

Margo A. Bagley
Hardy Cross Dillard Professor of Law
University of Virginia School of Law

Ann Bartow
Professor of Law
Pace Law School

Jeremey W. Bock
Assistant Professor of Law
The University of Memphis School of Law

Timothy R. Holbrook
Associate Dean of Faculty and Professor of Law
Emory University School of Law

William Hubbard
Associate Professor of Law
University of Baltimore School of Law

Yvette Joy Liebesman
Associate Professor of Law
Saint Louis University School of Law

---

* The views expressed in this brief are those of the individual signatories and not those of the institutions with which they are affiliated.

Daryl Lim
Assistant Professor of Law
The John Marshall Law School

Brian J. Love
Assistant Professor of Law
Santa Clara University School of Law

Mark P. McKenna
Associate Dean for Faculty Development and
Professor of Law
Notre Dame Law School

Joseph Scott Miller
Professor
University of Georgia School of Law

Tyler T. Ochoa
Professor of Law
Santa Clara University School of Law

Lucas S. Osborn
Associate Professor of Law
Campbell University
Norman Adrian Wiggins School of Law

Jason Rantanen
Associate Professor of Law
University of Iowa College of Law

Pamela Samuelson
Richard M. Sherman Distinguished Professor of Law
University of California Berkeley School of Law

Christopher B. Seaman
Assistant Professor of Law
Washington and Lee University School of Law

Katherine Jo Strandburg
Alfred B. Engleberg Professor of Law
New York University School of Law

AMICUS CURIAE BRIEF

Supreme Court, U.S.
FILED
FEB 2 6 2015
OFFICE OF THE CLERK

No. 13-896

In The

Supreme Court of the United States

COMMIL USA, LLC,

Petitioner,

v.

CISCO SYSTEMS, INC.,

Respondent.

On Writ Of Certiorari To The United States Court Of Appeals For The Federal Circuit

BRIEF OF PROFESSOR SAURABH VISHNUBHAKAT AS *AMICUS CURIAE* IN SUPPORT OF RESPONDENT

SAURABH VISHNUBHAKAT
Counsel of Record
DUKE UNIVERSITY SCHOOL OF LAW
210 Science Drive, Box 90362
Durham, North Carolina 27708
(919) 613-7428
vishnubhakat@law.duke.edu

COCKLE LEGAL BRIEFS (800) 225-6964
WWW.COCKLELEGALBRIEFS.COM

TABLE OF CONTENTS

Page

STATEMENT OF INTEREST OF *AMICUS CURIAE* 1

SUMMARY OF ARGUMENT 2

ARGUMENT 4

I. A good-faith belief that a patent is invalid is necessarily relevant to the requirements for induced infringement under § 271(b) 4

A. After *Global-Tech*, induced infringement requires the inducer to know that the induced actions constitute direct infringement of the patent 4

B. One cannot wrongfully intend to induce infringement of a patent that one believes is invalid, for one cannot infringe an invalid patent 7

1. Though the Federal Circuit is split, at least six regional circuits have held that one cannot infringe an invalid patent 7

2. The plain language of § 271(a) also counsels that one cannot infringe an invalid patent 9

C. Concerns about the presumption of validity and enforceability of patents are misplaced 11

TABLE OF CONTENTS – Continued

Page

II. The dispute in this case reflects a broader flaw in the conception of direct patent infringement as a strict-liability tort 15

A. This Court's precedents, tort understandings of patent law, and the text of § 271(a) do not support a strict-liability conception of direct infringement 15

B. Misconstruing this Court's precedents, tort principles, and the language of § 271(a), the Federal Circuit and the Government regard direct infringement as a strict-liability tort 20

C. The mistaken strict-liability view of direct patent infringement imposes significant costs on the public to avoid infringing existing patents, and also overstates the scope of the prior art, limiting the ability of inventors to protect their inventions through future patents 22

CONCLUSION 26

TABLE OF AUTHORITIES

Page

CASES

Akamai Technologies, Inc. v. Limelight Networks, Inc., 692 F.3d 1301 (2012).....21, 22

Aro Mfg. Co. v. Convertible Top Replacement Co., 377 U.S. 476, 84 S. Ct. 1526 (1964).....6, 10, 16, 22

Brothers v. U.S., 52 Ct. Cl. 462 (1917).....17

Cole v. United States Atty. Gen., 712 F.3d 517 (11th Cir. 2013).....19

Commil USA, LLC v. Cisco Systems, Inc., 720 F.3d 1361 (Fed. Cir. 2013), *reh'g denied*, 737 F.3d 699 (Fed. Cir. Oct. 25, 2013).....7, 8

Cridlebaugh v. Rudolph, 131 F.2d 795 (3d Cir. 1942).....8

Cummings v. Moore, 202 F.2d 145 (10th Cir. 1953).....8

DSU Medical Corp. v. JMS Co., Ltd., 471 F.3d 1293 (Fed. Cir. 2006).....7

Eldred v. Ashcroft, 123 S. Ct. 769 (2003).....9

Felburn v. New York Cent. R. Co., 350 F.2d 416 (6th Cir. 1965).....8

Flores-Figueroa v. U.S., 556 U.S. 646 (2009).....19

Global-Tech Appliances, Inc. v. SEB S.A., 131 S. Ct. 2060 (2011).....*passim*

Int'l Carbonic Eng'g Co. v. Natural Carbonic Prod., 57 F.Supp. 248 (S.D. Cal. 1944).....8

TABLE OF AUTHORITIES – Continued

Page

Int'l Carbonic Eng'g Co. v. Natural Carbonic Prod., 158 F.2d 285 (9th Cir. 1946) 8

Limelight Networks, Inc. v. Akamai Technologies, Inc., 134 S. Ct. 2111 (2014) 2, 20, 21

M. Swift & Sons v. W.H. Coe Mfg. Co., 102 F.2d 391 (1st Cir. 1939) 8

Medtronic, Inc. v. Cardiac Pacemakers, Inc., 721 F.2d 1563 (Fed. Cir. 1983) 8

Miehle Printing Press & Mfg. Co. v. Publication Corp., 166 F.2d 615 (7th Cir. 1948) 8

Muniauction, Inc. v. Thomson Corp., 532 F.3d 1318 (Fed. Cir. 2008) 21

Parker v. Haworth, 18 F. Cas. 1135, No. 10738 (C.C. Ill. 1848) 15

Parker v. Hulme, 18 F. Cas. 1138, No. 10740 (C.C.E.D. Pa. 1849) 15

Peters v. Active Mfg. Co., 21 F. 319 (C.C.S.D. Ohio 1884), *aff'd*, 129 U.S. 530 (1889) 24

Pratt v. U.S., 43 F.Supp. 461 (Ct. Cl. 1941) 18

Prima Tek II, L.L.C. v. Polypap, S.A.R.L., 412 F.3d 1284 (Fed. Cir. 2005) 7

Richdel, Inc. v. Sunspool Corp., 714 F.2d 1573 (Fed. Cir. 1983) 7

Spectra-Physics, Inc. v. Coherent, Inc., 827 F.2d 1524 (Fed. Cir. 1987) 8

TABLE OF AUTHORITIES – Continued

Page

Twentieth Century Music Corp. v. Aiken, 95 S. Ct. 2040 (1975) 14

U.S. v. Hill, 55 F.3d 1197 (6th Cir. 1995) 19

STATUTES

35 U.S.C. § 41(b) 10

35 U.S.C. § 102 24

35 U.S.C. § 154(a)(2) 10

35 U.S.C. § 154(b) 10

35 U.S.C. § 271(a) ..... *passim*

35 U.S.C. § 271(b) ..... *passim*

35 U.S.C. § 282(a) 11

RULES

Sup. Ct. R. 37.6 1

OTHER AUTHORITIES

ALBERT H. WALKER, A TREATISE ON THE LAW OF PATENTS FOR INVENTIONS § 377 (1929) 17

ALBERT H. WALKER, TEXT-BOOK OF THE LAW OF PATENTS FOR INVENTIONS § 377 (1917) 17

ALBERT H. WALKER, TEXT-BOOK OF THE PATENT LAWS § 377 (1883) 17

TABLE OF AUTHORITIES – Continued

Page

Alfredo De La Rosa, *A Hard Pill to Swallow: Does Schering v. Geneva Endanger Innovation within the Pharmaceutical Industry?*, 8 COLUM. SCI. & TECH. L. REV. 37 (2007) 25

ANTHONY W. DELLER, 3 WALKER ON PATENTS § 453 (1937) 17, 22

RESTATEMENT (SECOND) OF TORTS § 8A (1965).....16, 19

Saurabh Vishnubhakat, *An Intentional Tort Theory of Patents*, 68 FLA. L. REV. (forthcoming).....17, 18, 23, 24, 25

WILLIAM L. PROSSER, HANDBOOK OF THE LAW OF TORTS 40 (1941) 16, 19

STATEMENT OF INTEREST OF *AMICUS CURIAE*[1]

Professor Saurabh Vishnubhakat is a faculty fellow at Duke Law School, where he has taught patent law, and a researcher in the Duke Center for Public Genomics, where he studies the administrative process of patent examination in biological and software informatics innovation. Professor Vishnubhakat's scholarship explores issues of patent law, tort law, and litigation economics. He began his legal career as an advisor at the United States Patent and Trademark Office (USPTO), where he counseled the agency's chief economist on intellectual property policy. Based on this background, Professor Vishnubhakat is committed to improving doctrinal clarity and efficiency in patent law.

Professor Vishnubhakat remains an advisor at the USPTO, but has taken no part in the USPTO's involvement with this case on behalf of the United States. He has prepared and now submits this brief in accordance with conflict-of-interest guidance from the Ethics Law and Programs Division of the United States Department of Commerce.

---

[1] Pursuant to Sup. Ct. R. 37.6, no counsel or party authored this brief in whole or in part, and no counsel or party made a monetary contribution intended to fund the preparation or submission of this brief. No person other than *amicus curiae* made a monetary contribution to the preparation or submission of this brief. Both Petitioner and Respondent consented to the filing of this brief.

SUMMARY OF ARGUMENT

Patent infringement is a tort. This dispute and others like it persist because patent infringement doctrine rests on a confused view of basic tort principles. The confusion is about the role of intent in the torts of direct and indirect infringement. The source of the confusion is a failure to distinguish between knowledge or intent about actions and knowledge or intent about the legal implications of those actions.

That distinction is key to whether good-faith belief of a patent's invalidity may negate the intent necessary for induced infringement under 35 U.S.C. § 271(b). Following this Court's decisions in *Global-Tech Appliances, Inc. v. SEB S.A.*, 131 S. Ct. 2060 (2011), and *Limelight Networks, Inc. v. Akamai Technologies, Inc.*, 134 S. Ct. 2111 (2014), an alleged inducer must know about more than just actions in the world, i.e., that the induced actions took place. The inducer must also know about the legal implications of those induced actions, i.e., that the patent exists and that the induced actions directly infringe it under § 271(a). This case involves knowledge about yet another legal implication of induced actions: knowledge not only that the patent exists and is infringed but also that the patent is valid.

The issue for this Court, then, is whether § 271(a) makes it possible to directly infringe an invalid patent. The text of § 271(a) as well as the weight of case law counsel that one cannot directly infringe an invalid patent. Thus, an alleged inducer

such as Cisco, who believes that the patent is invalid, cannot form the necessary knowledge or belief that the actions it induced constitute infringement. Accordingly, an alleged inducer's good-faith belief of a patent's invalidity is properly a defense to induced infringement.

After *Global-Tech*, the law of induced infringement can no longer disregard good-faith belief of patent invalidity without also disregarding good-faith belief of noninfringement. Accepting the arguments of Petitioner and the Government in this case would repudiate *Global-Tech* after only four years, offending the principles of *stare decisis* and inequitably broadening the public's exposure to liability for induced infringement. For their part, Petitioner, the Government, and the dissent in the Court of Appeals argue that one can infringe an invalid patent, but liability will not follow. In addition to contradicting the weight of case law and the plain language text of § 271(a), their error reflects an even more fundamental doctrinal problem: the mistaken view that direct patent infringement is a strict-liability tort.

The strict-liability view of direct infringement improperly conflates the same tort distinction between knowledge or intent about actions and knowledge or intent about the legal implications of those actions. This error commanded only a dissent in the Court of Appeals in the present case, but it underlies both the Federal Circuit's broader jurisprudence on infringement and the position advanced by the Government. As a result, the mistaken strict-liability

view will remain a fertile source of dispute and uncertainty in patent law unless this Court corrects it, starting with a refusal to extend the strict-liability error into the present case.

For these reasons, this Court should affirm the decision of the Court of Appeals and conclude that a good-faith belief of a patent's invalidity is, indeed, a defense to induced infringement under § 271(b).

ARGUMENT

I. A good-faith belief that a patent is invalid is necessarily relevant to the requirements for induced infringement under § 271(b).

A. After *Global-Tech*, induced infringement requires the inducer to know that the induced actions constitute direct infringement of the patent.

This Court in *Global-Tech* has already answered part of the question presented in the present case. The issue in *Global-Tech* was whether induced infringement requires actual knowledge that the induced actions constitute direct infringement of the patent under § 271(a). The text of § 271(b) regards as an induced infringer "[w]hoever actively induces infringement of a patent." The terms "actively" and "induce" clearly require *some* level of intent to bring about direct infringement, this Court said; the question was *what* level of intent. 131 S. Ct. at 2065.

The answer arose from the distinction between an intent simply to bring about an action and a greater intent to bring about an action whose legal effects are also known:

> In referring to a party that "induces infringement," [§ 271(b)] may require merely that the inducer lead another to engage in conduct *that happens to amount to infringement*, i.e., the making, using, offering to sell, selling, or importing of a patented invention. See § 271(a). On the other hand, the reference to a party that "induces infringement" may also be read to mean that the inducer must persuade another to engage in conduct *that the inducer knows is infringement*. Both readings are possible.

Id. (emphasis added). Mere knowledge of the patent is not enough for induced infringement: the alleged inducer must also know that the acts it induces constitute direct infringement. *Id.* at 2068.

The Government's contrary reading of *Global-Tech* is misplaced. The Government argues that *Global-Tech* "does not clearly resolve" that § 271(b) requires an alleged inducer to know that the actions it induced constitute infringement. Gov't Br. in Supp. of Cert. 9. The purported ambiguity that the Government finds is that the *Global-Tech* opinion explains first that "knowledge of the existence of the patent that is infringed" is necessary. 131 S. Ct. at 2068. The opinion then holds that "knowledge that the induced acts constitute patent infringement" is

necessary. *Id.* In fact, the two statements are consistent, as liability under § 271(b) requires both.

The Government's error is its interpretation that "Section 271(b) requires *only* knowledge of (or willful blindness to) the patent's existence." Gov't Br. in Supp. of Cert. 9 (emphasis added). This Court in *Global-Tech* did not hold that knowledge of the patent's existence is the only requirement for induced infringement. Thus, the Government's reading incorrectly treats that necessary condition as a sufficient condition as well. The portions of *Global-Tech* that the Government cites piecemeal as evidence of internal ambiguity are a single passage. The passage starts by analogy to the settled rule that induced infringement requires knowledge of the patent. *Aro Mfg. Co. v. Convertible Top Replacement Co.*, 377 U.S. 476, 84 S. Ct. 1526 (1964) (*Aro II*). The passage continues with the holding that induced infringement also requires knowledge that the induced acts directly infringe. 131 S. Ct. at 2068.

What remains unanswered by this Court after *Global-Tech* is whether one can know or believe that a patent is infringed even if one believes that the patent is invalid.

B. One cannot wrongfully intend to induce infringement of a patent that one believes is invalid, for one cannot infringe an invalid patent.

As the Court of Appeals correctly held, one cannot infringe an invalid patent. Thus, one cannot know or believe that a patent is infringed if one believes that the patent is invalid. Put another way, because a good-faith belief of noninfringement is enough to defeat induced infringement, *see DSU Medical Corp. v. JMS Co., Ltd.*, 471 F.3d 1293, 1307 (Fed. Cir. 2006) (*en banc*), a good-faith belief of invalidity must be enough as well. Petitioner, the Government, and the dissent in the Court of Appeals all argue that one can infringe an invalid patent, though liability may not follow. The weight of the case law and the text of § 271(a) reveal the error of their position.

1. Though the Federal Circuit is split, at least six regional circuits have held that one cannot infringe an invalid patent.

Within the Federal Circuit alone, relevant precedent is split. The majority in the Court of Appeals pointed to two cases holding that one cannot infringe an invalid patent. *Commil USA, LLC v. Cisco Systems, Inc.*, 720 F.3d 1361, 1368 (Fed. Cir. 2013), *reh'g denied*, 737 F.3d 699 (Fed. Cir. Oct. 25, 2013) (citing *Prima Tek II, L.L.C. v. Polypap, S.A.R.L.*, 412 F.3d 1284, 1291 (Fed. Cir. 2005), and *Richdel, Inc. v. Sunspool Corp.*, 714 F.2d 1573, 1580 (Fed. Cir. 1983)).

The dissent from the denial of the petition for rehearing *en banc* likewise pointed to two cases holding that an invalid patent may be infringed, though liability may not follow. 737 F.3d at 703 (citing *Spectra-Physics, Inc. v. Coherent, Inc.*, 827 F.2d 1524, 1535 (Fed. Cir. 1987), and *Medtronic, Inc. v. Cardiac Pacemakers, Inc.*, 721 F.2d 1563, 1583 (Fed. Cir. 1983)).

Outside the Federal Circuit, however, at least six regional circuits that have addressed the issue appear to be unanimous that one cannot infringe an invalid patent. *Felburn v. New York Cent. R. Co.*, 350 F.2d 416, 426 (6th Cir. 1965) (holding that "[t]here can be no infringement of an invalid patent"). *Cummings v. Moore*, 202 F.2d 145, 147 (10th Cir. 1953) (holding that "an invalid patent cannot be infringed"). *Miehle Printing Press & Mfg. Co. v. Publication Corp.*, 166 F.2d 615, 617 (7th Cir. 1948) (holding that "obviously, there can be no infringement of an invalid patent"). *Int'l Carbonic Eng'g Co. v. Natural Carbonic Prod.*, 158 F.2d 285, 285 (9th Cir. 1946) (affirming and adopting the reasoning of the trial opinion, 57 F.Supp. 248, 254 (S.D. Cal. 1944), that "[i]t is fundamental that there can be no infringement of an invalid patent"). *Cridlebaugh v. Rudolph*, 131 F.2d 795, 797 (3rd Cir. 1942) (holding that patents that are invalid are, "therefore, incapable of supporting a charge of infringement with respect to any of their claims"). *M. Swift & Sons v. W.H. Coe Mfg. Co.*, 102 F.2d 391, 396 (1st Cir. 1939) (holding that "an invalid patent can not be infringed").

2. The plain language of § 271(a) also counsels that one cannot infringe an invalid patent.

Though none of these decisions argue from the text of § 271(a), the statute supports this consensus as well. To be liable for direct infringement, it is not enough that one "makes, uses, sells, offers to sell . . . or imports" the patented invention. 35 U.S.C. § 271(a). One must do so "without authorization" and "during the term of the patent." *Id.* Each of these two additional requirements conditions the existence of direct infringement on the validity of the patent.

The proscription on practicing an invention "without authorization" is meaningful only if and while someone retains a valid right to withhold that authorization. The U.S. patent system contemplates eventual unfettered public use of the patented invention once the term of the patent concludes. *Eldred v. Ashcroft*, 123 S. Ct. 769, 791 (2003) (explaining that the patent represents a "*quid pro quo* that justifies the limited monopoly for the inventor as consideration for full and immediate access by the public when the limited time expires"). Where the patent turns out to have been invalid all along, any denial of authorization asserted on the basis of the patent must also be regarded as having had no legal force. Any practice of the invention during that time, then, cannot have been "without authorization" and so cannot be direct infringement under § 271(a).

A patent may reach the end of its term in several ways. It may do so by the ordinary passage of time, when the maximum duration allowed by law, including adjustments, has elapsed. 35 U.S.C. §§ 154(a)(2), 154(b). It may do so early by the patent owner's failure to pay the maintenance fees necessary to keep the patent in force. 35 U.S.C. § 41(b). Or it may do so through judicial or administrative invalidation of the patent. In each case, once the patent right has lapsed – or it is determined that the patent right should never have been granted at all – no patent term of any legal force can have existed during which § 271(a) could operate. In sum, an invalid patent can meet neither of these criteria of § 271(a), making it impossible to infringe an invalid patent.

Even if the patent term issue were set aside, the Government itself, citing *Aro II*, argues that "unauthorized use, without more, constitutes infringement." Gov't Br. at 10. That the use must be unauthorized, however, still means that only a valid patent, one that confers a cognizable right to withhold authorization, can be infringed.

These arguments are not to suggest that direct infringement requires a knowledge or belief that the patent is valid. Rather, direct infringement requires the patent actually to be valid. It is induced infringement that requires knowledge or belief that the induced acts constitute direct infringement. Accordingly, induced infringement also logically requires knowledge or belief that the patent is valid. An alleged inducer such as Cisco, who has a good-faith

belief that the patent is invalid, cannot form the necessary belief that the induced acts amount to a direct infringement. So far as an alleged inducer's scienter is concerned, there is nothing to infringe.

C. Concerns about the presumption of validity and enforceability of patents are misplaced.

Petitioner's counterargument regarding the presumption of validity is unpersuasive. Its concern is that allowing an alleged inducer to rely on its good-faith belief in the patent's invalidity implicates 35 U.S.C. § 282(a) that a patent "shall be presumed valid." Pet. Br. 51-52. Petitioner concludes that, where the patent's invalidity has not been established, "an inducer should not be permitted to circumvent the statutory presumption of validity." *Id.* at 53.

What makes this argument unpersuasive is that the presumption of validity, by its own terms, pertains only to the fact of validity or invalidity. What the challenging party bears is a burden "of establishing invalidity," not of establishing beliefs regarding invalidity. § 282(a). Though it is not implicated by the § 282(a) presumption, however, a good-faith belief of patent invalidity is sufficient to defeat induced infringement under § 271(b).

Therefore, it may well be true that recognizing a defense of good-faith belief in invalidity "fundamentally changes the operating landscape" of induced

infringement. Pet. App. 58a-60a. Such a change, however, would not be from any erosion of the statutory presumption of validity. The presumption is not so expansive in the first place, and the change would, if anything, further align the induced infringement standard with this Court's *Global-Tech* decision.

The Government's argument regarding the enforceability of patent rights is similarly unpersuasive. Its concern is that allowing an alleged inducer to rely on its good-faith belief in the patent's invalidity would create incentives not to design around existing patents, but to design legal theories of invalidity. Gov't Br. 29-30. The policy choice advanced by the Government is consistent with a view of direct infringement as a broadly sweeping "strict-liability tort" to which an alleged infringer's beliefs are irrelevant. *Id.* at 20.

What makes this argument unpersuasive is that, even if direct infringement were a strict-liability tort – which it is not – the issue would not be whether the alleged inducer's belief about invalidity decides the fact of direct infringement. Rather, the alleged inducer's belief about invalidity is logically necessary to its belief about whether the actions induced amounted to infringement – which is, indeed, necessary for induced infringement. *Supra* at 4-6.

The upshot is that disregarding an alleged inducer's good-faith belief of patent invalidity would impose a cost on the public, and after *Global-Tech*, such a cost is unwarranted. Those who induce actions that

practice a patented invention cannot commit induced infringement if they have good-faith beliefs of noninfringement. If good-faith beliefs of patent invalidity were ignored, however, that freedom of action would artificially be limited to patents that are believed to be validly exclusionary. This would put the public in the nonsensical position of having to accommodate patents that they believe are invalid and therefore impossible to infringe – even as they remain free of induced infringement liability with respect to patents that they believe are valid and merely uninfringed.

Thus, recognizing a defense of good-faith belief in patent invalidity may well "substantially undermine" the use of induced infringement to constrain certain public conduct. Gov't Br. 28-33. The conduct in question, however, should not be thus constrained in the first place, and such a change would only further align the induced infringement standard with this Court's *Global-Tech* decision.

To accept Petitioner's argument about the statutory presumption of validity or the Government's argument about the normatively correct effectiveness of induced infringement, this Court would have to repudiate its *Global-Tech* decision after only four years. It is the reasoning of that decision which requires an alleged inducer to know not only that the patent exists but also that the induced conduct infringes it. From this, it follows that a good-faith belief that the patent is invalid makes it impossible to know

or believe that the patent is infringed. Thus, disregarding a good-faith belief of invalidity would require disregarding a good-faith belief of noninfringement.

Such a rapid reversal would "more than offend the principles of stare decisis." *Twentieth Century Music Corp. v. Aiken*, 95 S. Ct. 2040, 2046-47 (1975). By eviscerating the scienter requirement of § 271(b) that circumscribes the public's exposure to induced infringement liability, such a reversal would also create broad new legal risks for the public. The result would be a regime of indirect patent infringement "that would be both wholly unenforceable and highly inequitable." *Id.* at 2047.

Moreover, though these arguments hold even if one accepts the Government's premise that direct infringement is a strict-liability tort, that premise is incorrect as well. The error is one that the Federal Circuit repeats often, and it will remain a fertile source of dispute and uncertainty in patent law unless this Court corrects it. As a first step toward that correction, this Court should decline to adopt or accommodate the strict-liability view in this case.

II. The dispute in this case reflects a broader flaw in the conception of direct patent infringement as a strict-liability tort.

A. This Court's precedents, tort understandings of patent law, and the text of § 271(a) do not support a strict-liability conception of direct infringement.

Though it is well settled that patent infringement is a tort, infringement doctrine has departed from basic tort principles, especially the distinction between actions and the legal implications of those actions. This distinction is key to the strict-liability view, which rests on two propositions. First, direct infringement does not require an intent to commit infringement. Second, direct infringement does not require a knowledge of the patent. These propositions are well accepted, to be sure, dating back to the 1840s. *See, e.g.*, *Parker v. Hulme*, 18 F. Cas. 1138, 1143, No. 10740 (C.C.E.D. Pa. 1849); *Parker v. Haworth*, 18 F. Cas. 1135, 1136, No. 10738 (C.C. Ill. 1848).

The problem with these propositions is that they prove too little. Even an intentional tort requires no intention to commit the tort nor any knowledge of the existence of the legal right. What makes intentional torts intentional is an intent to perform the actions that the law deems tortious. For direct infringement truly to be a strict-liability tort, it must be possible for unintended actions to infringe. None of the Federal Circuit's own direct infringement cases, however, so hold. The strict-liability view is merely *ipse dixit*.

For tort purposes, to have intent is simply to act in order to accomplish a result or to believe that the result is substantially certain to follow. *See* RESTATEMENT (SECOND) OF TORTS § 8A (1965); WILLIAM L. PROSSER, HANDBOOK OF THE LAW OF TORTS 40 (1941). Thus, tortious intent, which pertains to actions, is altogether distinct from higher forms of scienter, which pertain to the legal implications of those actions.

This Court expressly drew that distinction in *Global-Tech* for induced infringement. *Supra* at 5-6. The opinion in *Global-Tech* contrasted knowledge or intent as to certain induced actions with knowledge or intent as to the infringing nature of those actions. 131 S. Ct. at 2065. Indeed, whether § 271(b) requires both or only the former was the central dispute of the case. The outcome was that § 271(b) requires both. This distinction applies equally to direct infringement, which does not require knowledge or intent regarding the legal implications of one's actions – i.e., the existence of the patent right or the infringing nature of the actions. *Aro II*, 377 U.S. at 484 (cited in *Global-Tech*, 131 S. Ct. at 2065 n.2).

However, neither *Global-Tech* nor *Aro II* – nor any source cited in those opinions – holds that direct infringement does not require an intent to perform the *actions* that the law deems wrongful: making, using, selling, offering, or importing the invention. To the contrary, this Court in *Global-Tech* took its view of direct infringement from Professor Walker's treatise, which has repeatedly explained only that direct

infringement requires neither knowledge of the patent nor appreciation that one's act is infringement – not that intent to perform the *actions* is unnecessary. 131 S. Ct. at 2065 n.2 (citing ANTHONY W. DELLER, 3 WALKER ON PATENTS § 453 (1937)). *See also* ALBERT H. WALKER, A TREATISE ON THE LAW OF PATENTS FOR INVENTIONS § 377 (1929); ALBERT H. WALKER, TEXT-BOOK OF THE LAW OF PATENTS FOR INVENTIONS § 377 (1917); ALBERT H. WALKER, TEXT-BOOK OF THE PATENT LAWS § 377 (1883).

These premises do not support a strict-liability view of direct patent infringement. If tortious intent (to make, use, sell, etc.) is necessary, then direct infringement is best understood as an intentional tort. *See generally* Saurabh Vishnubhakat, *An Intentional Tort Theory of Patents*, 68 FLA. L. REV. (forthcoming). If tortious intent were irrelevant – that is, if unintended *actions* could give rise to direct infringement – only then would strict liability be possible. That is not the law, however.

Historically, in fact, in the few cases that have inquired about intent to perform the underlying actions, the outcome was noninfringement because the actions were unintended. For example, in *Brothers v. U.S.*, 52 Ct. Cl. 462 (1917), the plaintiff asserted a patent on a cable bridge system in which towers connecting the cables would desirably yield or tilt. During construction of the Panama Canal, the U.S. government had built rigid towers that happened to yield and tilt under the stress of tightened cables, and William Brothers argued that this was infringement.

The Court of Claims disagreed because the government's towers were rigid by design: *unintended* mechanical behavior in the towers that coincided with the patented invention, said the court, could not infringe.

Similarly, in *Pratt v. U.S.*, 43 F.Supp. 461 (Ct. Cl. 1941), the plaintiff asserted a patent on a mechanism for hooking an airplane with a wire in flight and dragging it both horizontally and vertically to a rapid stop. The Navy used a different mechanism on its aircraft carriers, hooking an airplane after it landed on the deck and dragging it to stop only horizontally. However, because landed airplanes sometimes bounced a few inches while rolling to a stop, the patentee identified vertical motion as well. The Court of Claims again disagreed, holding that *unintended* operation that happened to coincide with the patented invention was not infringement. Because Lt. Hazen Pratt had previously tried to license his patent to the Navy, there was no question regarding knowledge of the patent or of possible infringement. The Navy simply had no intent to do the action that amounted to infringement. These findings of noninfringement based on an absence of tortious intent are inconsistent with a strict-liability view.

In addition to this Court's precedents and the historical tort view of direct patent infringement, the language of § 271(a) also disfavors the strict-liability view. *See* Vishnubhakat, *supra*, at 34-37. The Patent Act regards as a direct infringer:

> whoever without authority makes, uses, offers to sell, or sells any patented invention, within the United States or imports into the United States any patented invention during the term of the patent therefor.

§ 271(a). The use of five transitive verbs – "makes," "uses," "offers," "sells," and "imports" – to specify the set of infringing actions is consistent with requiring purposive, intentional conduct on the part of an alleged infringer. *Cf. Flores-Figueroa v. U.S.*, 556 U.S. 646, 650-54 (2009) (taking as given that a transitive verb in statutory text calls for purposive action and, further, finding that an adverb of intentionality that modifies such a verb also modifies both the object of the verb and limitations on the object); *Cole v. United States Atty. Gen.*, 712 F.3d 517, 528 (11th Cir. 2013) (finding that transitive verbs in statutory text require intentional conduct); *U.S. v. Hill*, 55 F.3d 1197, 1202 (6th Cir. 1995) (same).

The level of purpose required by § 271(a) may be as minimal as seeking to achieve the natural result of the act itself or to believe that such a result is substantially certain to follow, e.g., the alleged infringer must seek the result of a making: the thing that is actually made (rather than, say, an unintended byproduct). Whether the alleged infringer was also mistaken or wholly ignorant of the act's legal consequences is neither necessary nor sufficient, but irrelevant. Indeed, this is the very definition of tortious intent. *Supra* RESTATEMENT (SECOND) OF TORTS § 8A; PROSSER at 40.

Thus, this Court's precedents, historical tort understandings of patent law, and the text of § 271(a) determine only that intent to commit infringement and knowledge of the patent are unnecessary for direct infringement. They give no warrant to go further and disregard tortious intent as well. There is no sound basis, therefore, to view direct infringement as a strict-liability tort.

B. Misconstruing this Court's precedents, tort principles, and the language of § 271(a), the Federal Circuit and the Government regard direct infringement as a strict-liability tort.

Though this Court has never endorsed a strict-liability view of direct patent infringement, that view underlies the Federal Circuit's jurisprudence as well as the Government's position and reflects a misunderstanding of tort law. In practice, the strict-liability view conflates knowledge or intent about actions with knowledge or intent about the legal implications of those actions. This Court recently reversed just such an error, founded on the strict-liability view, in *Limelight Networks, Inc. v. Akamai Technologies, Inc.*, 134 S. Ct. 2111 (2014).

The *Limelight* opinion began with the settled rule that induced infringement under § 271(b) requires underlying direct infringement under § 271(a). 134 S. Ct. at 2118. It then explained that, where the alleged direct infringement is divided among multiple

parties, there must be a principled reason to evaluate the parties' conduct collectively. *Id.* at 2118-19. Under current law, that principled reason is the "control or direction" rule of *Muniauction, Inc. v. Thomson Corp.*, 532 F.3d 1318 (Fed. Cir. 2008). Thus, unless the "control or direction" test is met, the disputed conduct is not, in fact, direct infringement. *Limelight*, 134 S. Ct. at 2119.

The central grievance in *Limelight* was that the rule of *Muniauction* is too narrow and allows "a would-be infringer to evade liability." *Id.* at 2120. The *en banc* Federal Circuit majority held this view because, although induced infringement does require knowledge about the underlying direct infringement, the direct infringement itself does not require any intent or knowledge about whether the patentee's rights exist or are violated. *Akamai Technologies, Inc. v. Limelight Networks, Inc.*, 692 F.3d 1301, 1308 (2012) (*en banc*). From this alone, the *en banc* majority concluded that even though the conduct of the parties was not closely enough related under *Muniauction*, nevertheless "the patentee's rights [were] plainly being violated by the actors' joint conduct." *Id.* at 1306.

In short, the Federal Circuit's underlying error in *Limelight* was to focus on intent or knowledge about legal consequences of actions while ignoring intent or knowledge about the actions themselves. The source of this error was the expressly stated assumption that direct infringement is a strict-liability tort. *Id.* at 1307. The result of the error was "the quandary of

how there can be direct infringement but no direct infringers." *Id.* at 1328 (Newman, J., dissenting).

The Government's position in this case recites the mistaken strict-liability view as well. Its argument that an alleged infringer's knowledge or intent cannot be relevant to direct infringement follows directly from its reading of § 271(a) as a strict-liability statute. Gov't Br. in Supp. of Cert. 11; Gov't Br. at 20. In support of this position, however, it cites only *Global-Tech*. 131 S. Ct. at 2065 n.2. However, as discussed *supra* at 16-20, the cited language of *Global-Tech* (which itself cites *Aro II* and DELLER'S WALKER ON PATENTS) supports only the settled view that direct infringement does not require an intent to commit infringement or any knowledge that the patent exists. It does not support the further view, necessary to strict liability, that direct patent infringement can exist even without any tortious intent to perform the actions specified in § 271(a).

C. The mistaken strict-liability view of direct patent infringement imposes significant costs on the public to avoid infringing existing patents, and also overstates the scope of the prior art, limiting the ability of inventors to protect their inventions through future patents.

A direct infringement rule that captured even unintended actions would harm both the public and, in the long run, patent-reliant innovators as well.

Because a strict-liability view would allocate infringement risk entirely to the public, such a view would impose significant costs upon the public to avoid infringing. Vishnubhakat, *supra*, at 18-26.

These costs pertain generally to making, selling, and using inventions that are covered by patent rights. As to making, industrial chemistry offers the useful example of a process that generates a byproduct that turns out to be patented. The byproduct has been "made," to be sure, but if its production was unintended (or even unforeseeable by one of ordinary skill in the art), then penalizing it as direct infringement is dubious. *See* Vishnubhakat, *supra*, at 41.

As to selling and using, information technology offers the example of a mobile phone retailer that sells devices that contain a microchip that turns out to be patented. The retailer undoubtedly has an intent to sell something, but it almost surely does not have the intent specifically to sell the microchip, for what it deals in is the fully assembled device. Manufacturers and designers further up the stream of commerce may well have knowledge and intent as to the microchip, but the retailer is not so positioned. It does not know enough to form any tortious intent with respect to the microchip. What is more, it cannot cheaply discover enough to efficiently avoid infringing. *See* Vishnubhakat, *supra*, at 41-42.

Similarly situated is the end user who purchases such a device from the retailer. Like the retailer, what the user intends to use is the fully assembled device.

Also like the retailer, the user is poorly positioned to know enough about the inner workings of the device to form any tortious intent as to the microchip – or to efficiently avoid infringing. *See* Vishnubhakat, *supra*, at 42-44.

In each case, treating direct patent infringement as a strict-liability tort would penalize unintended conduct and require the public to engage in inefficient avoidance of infringement risk. Such strict-liability penalties are at odds with the U.S. patent system's instrumental aims of balancing the reward to innovators with efficient notice and access for the public. Rather, such penalties are more in line with a purely distributive theory of tort law.

The harm is not limited to the general public, however. Inventors who rely on patents to recoup significant investments in research and knowledge creation would also suffer from a strict-liability view of direct infringement. The reason is that the same doctrine that favors a patent holder in claiming infringement of an existing patent also disfavors the inventor when the time comes for a new patent to issue.

When evaluating whether an invention is truly novel or is anticipated by the prior art under 35 U.S.C. § 102, the rule is the same as when evaluating whether a product or process infringes a patent. The usual articulation of this symmetry is, "That which infringes, if later, would anticipate, if earlier." *Peters v. Active Mfg. Co.*, 21 F. 319, 321 (C.C.S.D. Ohio

1884), *aff'd*, 129 U.S. 530, 537 (1889). This symmetry is a key fulcrum in balancing public access with the ability of inventors to obtain patent protection for new and useful advances.

Thus, adopting a strict-liability rule for direct infringement would also implicate a strict-liability rule for anticipation. If actions or results that were unintended could constitute infringement, then actions or results not contemplated by the prior art could nevertheless be held to anticipate future inventions and improperly defeat the patentability of such inventions. *See* Vishnubhakat, *supra*, at 44-49. Such a rule would be a significant departure from historical understandings of the anticipation doctrine and would erect unfounded new barriers to securing patent rights. These barriers would fall especially to industries where innovation is already scientifically unpredictable and fraught with financial and regulatory uncertainty, such as pharmaceuticals and biotechnology – and where, as a result, patent incentives are most necessary and effective. *E.g.*, Alfredo De La Rosa, *A Hard Pill to Swallow: Does Schering v. Geneva Endanger Innovation within the Pharmaceutical Industry?*, 8 COLUM. SCI. & TECH. L. REV. 37 (2007) (discussing the potential effects of a strict liability-like rule of anticipation in patent law).

In sum, the strict-liability view of direct infringement misconstrues this Court's precedents, ignores traditional tort principles that should apply with equal force to patent law, and produces inefficient and undesirable policy. By conflating the tort

distinction between knowledge or intent about actions and knowledge or intent about the legal implications of those actions, the strict-liability view creates needless doctrinal confusion. Accordingly, that mistaken view should not be adopted or accommodated by this Court in determining the appropriate scienter requirement for induced infringement under § 271(b).

CONCLUSION

For the foregoing reasons, the judgment of the Court of Appeals should be affirmed.

Respectfully submitted,

SAURABH VISHNUBHAKAT
Counsel of Record
DUKE UNIVERSITY SCHOOL OF LAW
210 Science Drive, Box 90362
Durham, North Carolina 27708
(919) 613-7428
vishnubhakat@law.duke.edu

February 26, 2015